URS ENGINEERS

Engineering and Environmental Consultants

Juneau Anchorage Seattle

CITY OF HAINES
ALASKA
1985 OUTFALL EXTENSION

SHEET INDEX

1. PLAN AND PROFILE
2. DETAILS

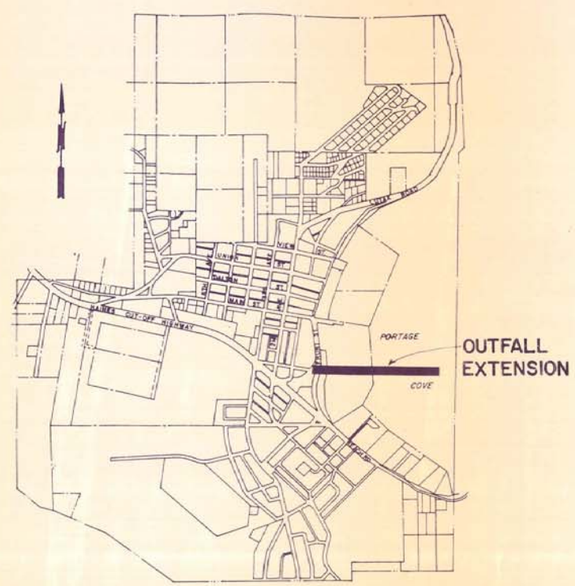

PROJECT MAP

CITY OFFICIALS

MAYOR

JON D. HALLIWILL

HAINES CITY COUNCIL

ARNE OLSSON
CARLYLE STUART
DAVE BERRY
FRANK WALLACE
JERRY GILLAND
KEN BRYANT

CITY ADMINISTRATOR

DARRELL MAPLE

PUBLIC WORKS SUPERINTENDENT

LEO M. THOMPSEN, P.E.

REVISED TO CONFORM WITH CONSTRUCTION RECORDS
By JLG
Ckd VMS
Date 8-5-85

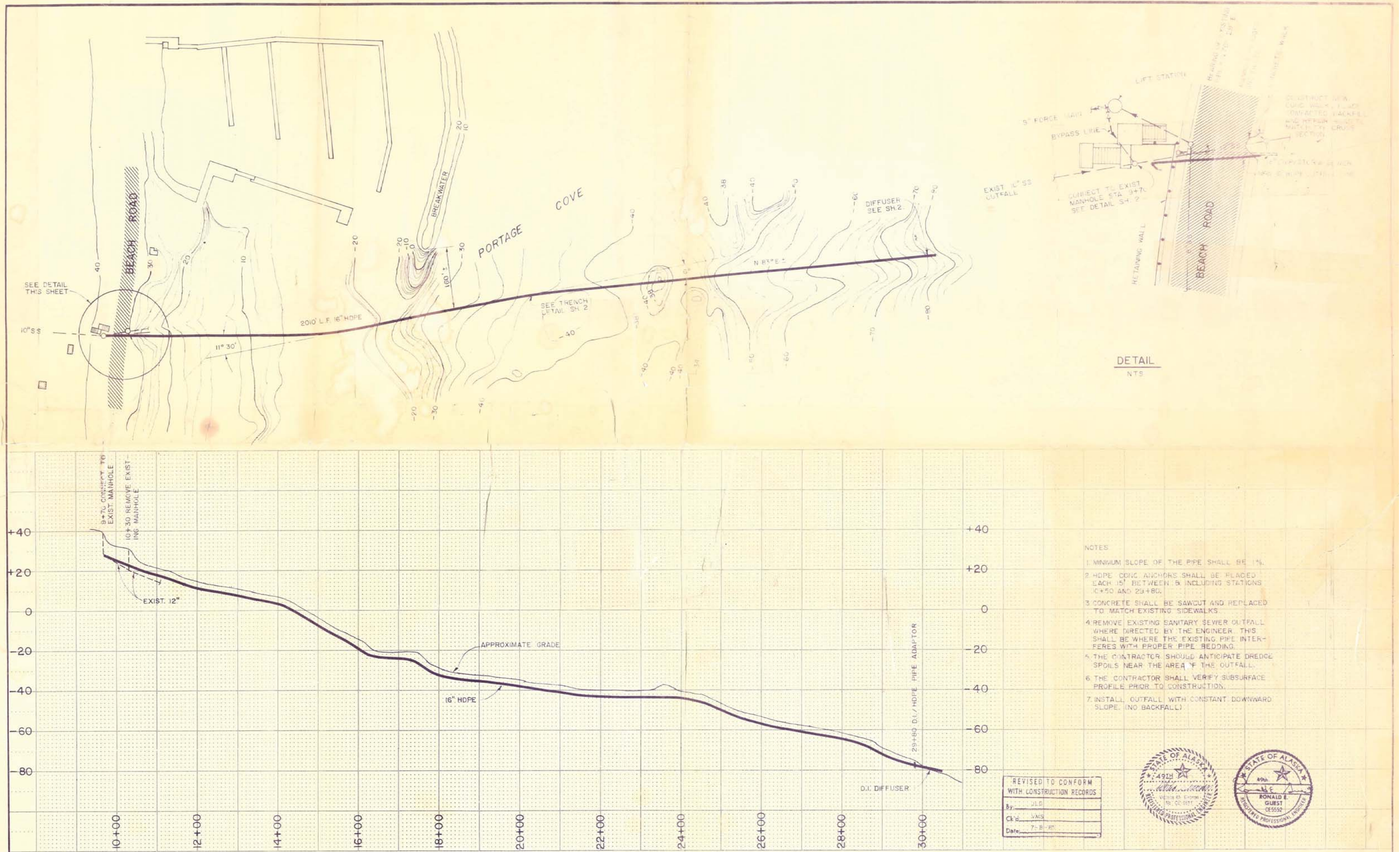

No.	DATE	BY	REVISION
2	7-8-85	JLG	REVISED TO CONORM WITH CONSTRUCTION RECORDS
1	3-8-85	VMS	ADDENDUM NO. 1 BATHYMETRY SURVEY ADDED

Job No 4867-0010-02
SCALE HORIZ. 1" = 100' VERT. 1" = 20' Except as Shown

Designed VMS
Drawn by JLG
Checked by GLD

Proj. Engr. EMR
Approved by REG
Date Feb. 28, 1985

URS ENGINEERS
Engineering and Environmental Consultants

CITY OF HAINES

OUTFALL EXTENSION
PLAN & PROFILE

SHEET 1 / 2

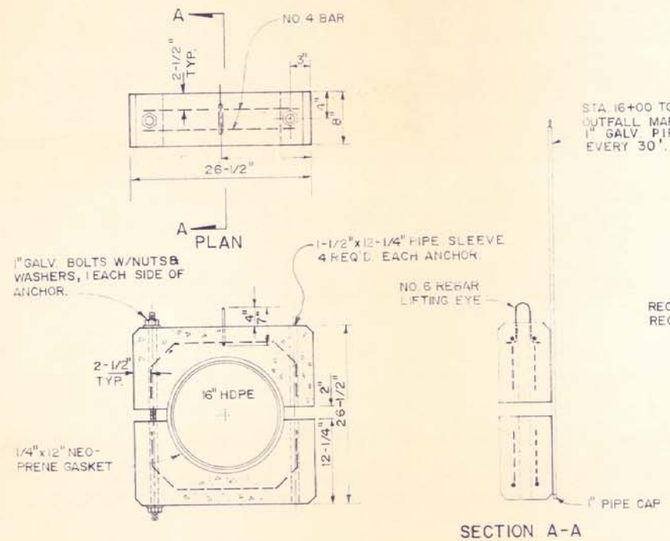

POLYETHYLENE PIPE ANCHOR

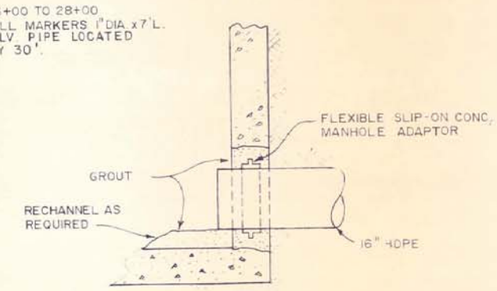

M.H. CONNECTION DETAIL

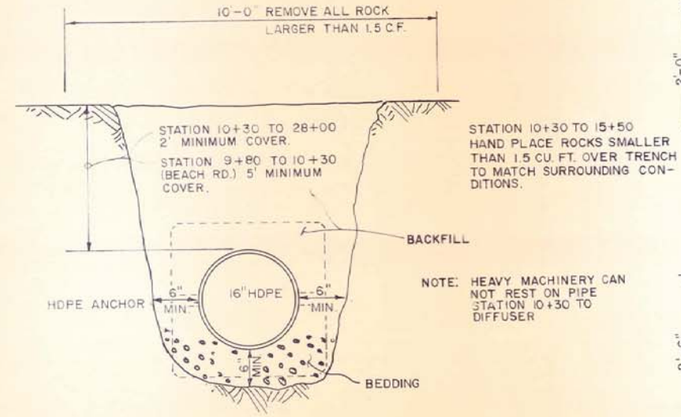

TRENCH DETAIL

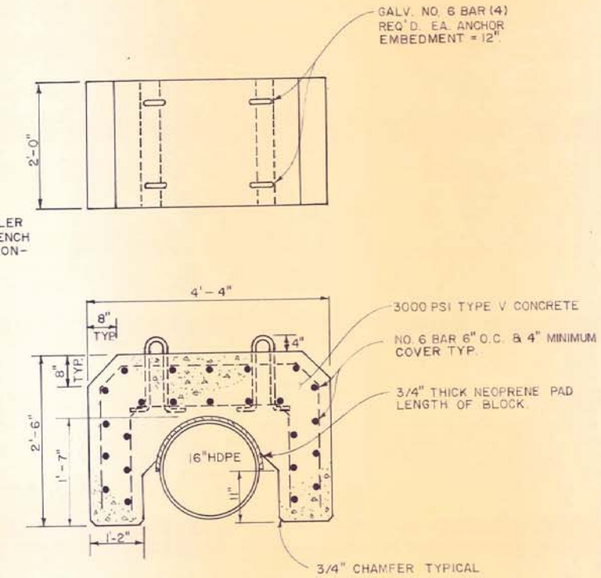

DUCTILE IRON PIPE ANCHOR

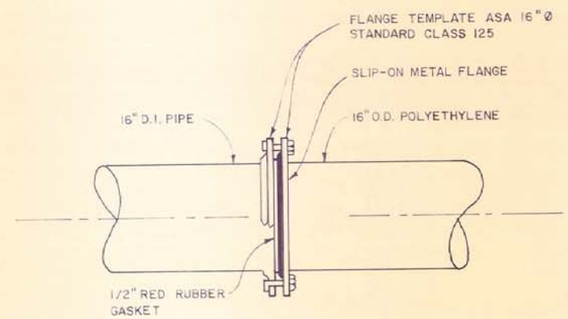

HDPE / DI ADAPTOR

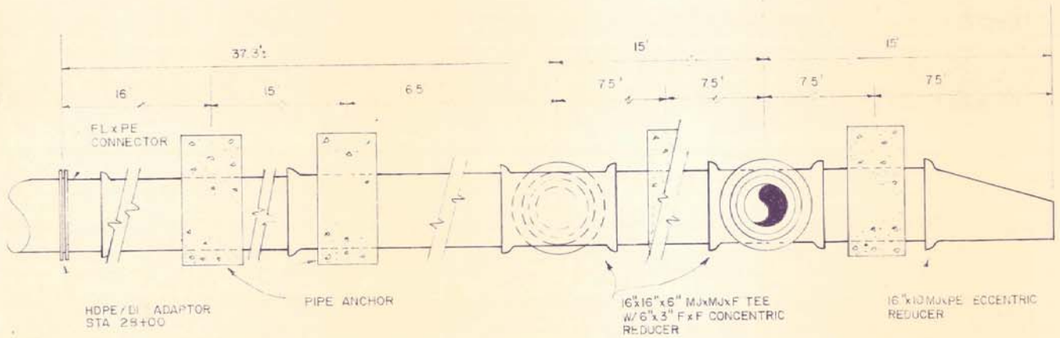

NOTE
USE M.J. DUCTILE IRON PIPE FOR DIFFUSER ASSEMBLY

DIFFUSER DETAIL

STATE OF ALASKA 4914 VERNON M. SHAW III REGISTERED PROFESSIONAL ENGINEER

STATE OF ALASKA 4961 RONALD E. GUEST CE5552 REGISTERED PROFESSIONAL ENGINEER

REVISED TO CONFORM WITH CONSTRUCTION RECORDS	
By	JLG
Ck'd	VMS
Date	8-5-85

No.	DATE	BY	REVISION	Proj. No. 4867-0010-02	Designed VMS	Proj. Eng. REG	URS ENGINEERS Engineering and Environmental Consultants	CITY OF HAINES	OUTFALL EXTENSION DETAIL SHEET	SHEET 2 / 2
				Scale NTS	Drawn by JLG	Approved by REG				
					Checked by GLD	Date Feb. 28, 1985				

CITY ADMINISTRATOR
Tom Healy

MAYOR
Greg Combs

CITY OF HAINES, ALASKA

CITY COUNCIL
Lynda Walker
Brian Lemcke
Chip Lende
Kurt Ramseyer
Mike Ward

MARINE OUTFALL REPAIR

MONTGOMERY WATSON

Juneau, Alaska

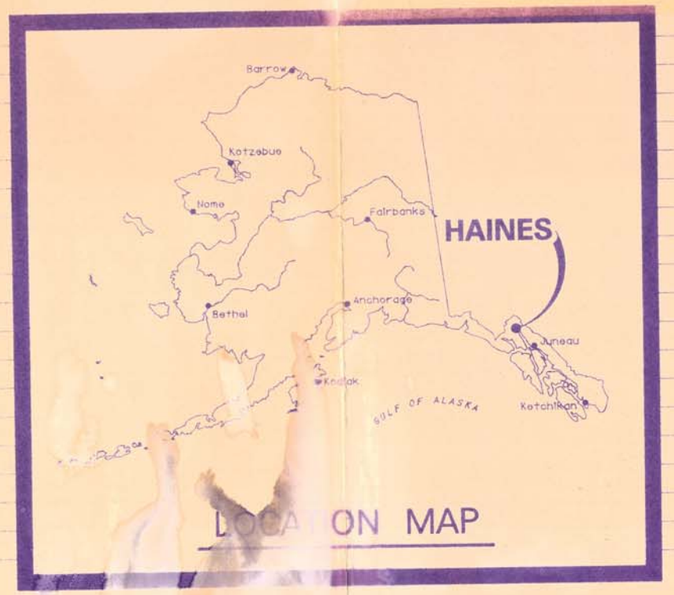

LOCATION MAP

SET 012

STATE OF ALASKA 49TH Jerome W. Sorger P.E.-CE 3848 REGISTERED PROFESSIONAL ENGINEER

DEC 2 1993

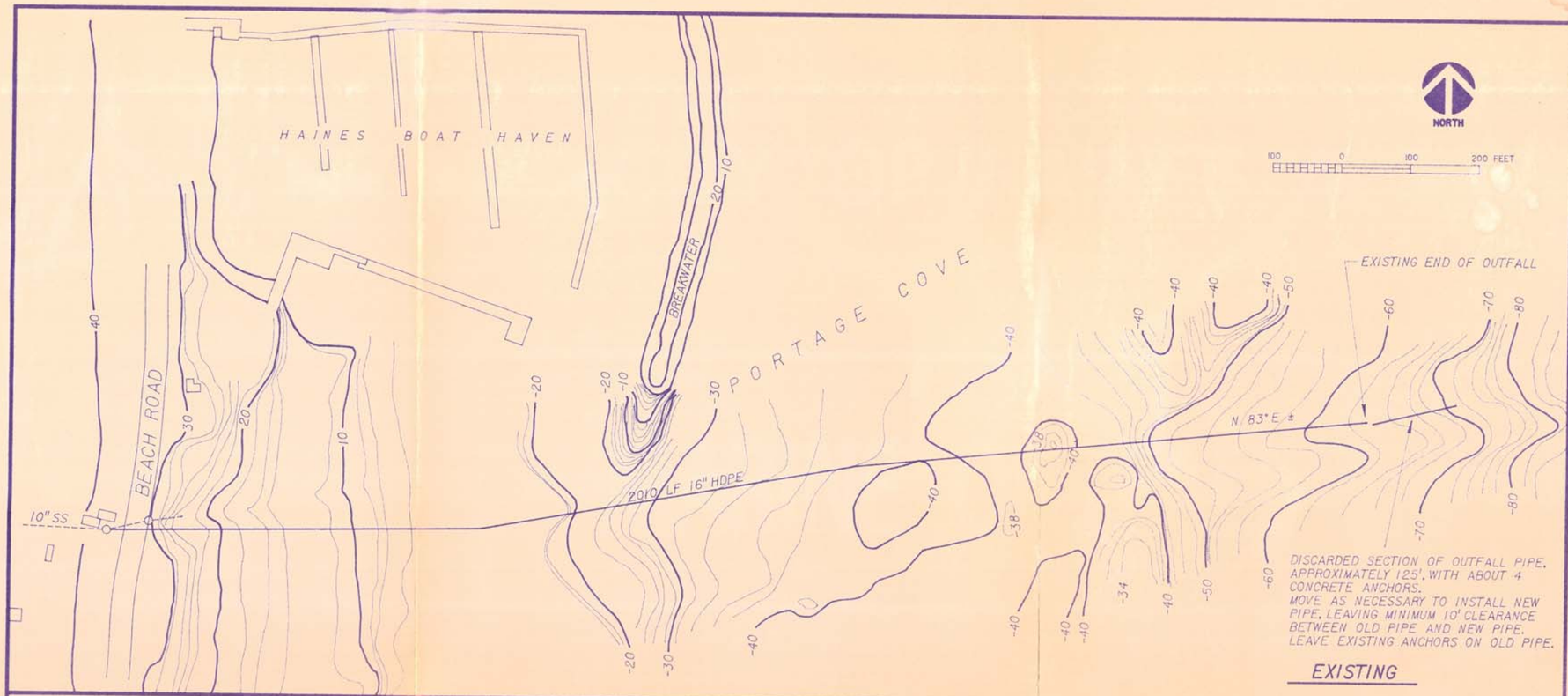

EXISTING

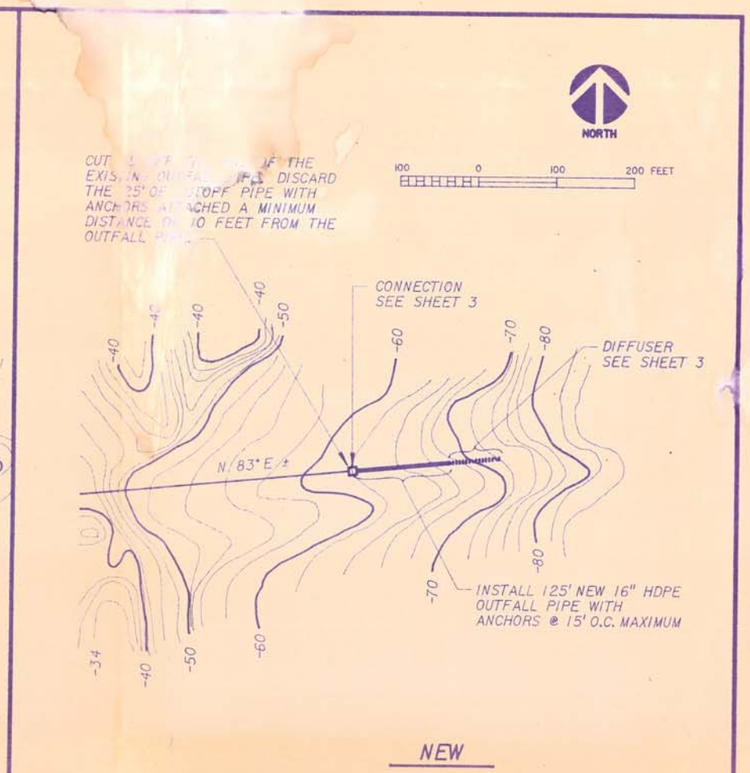

NEW

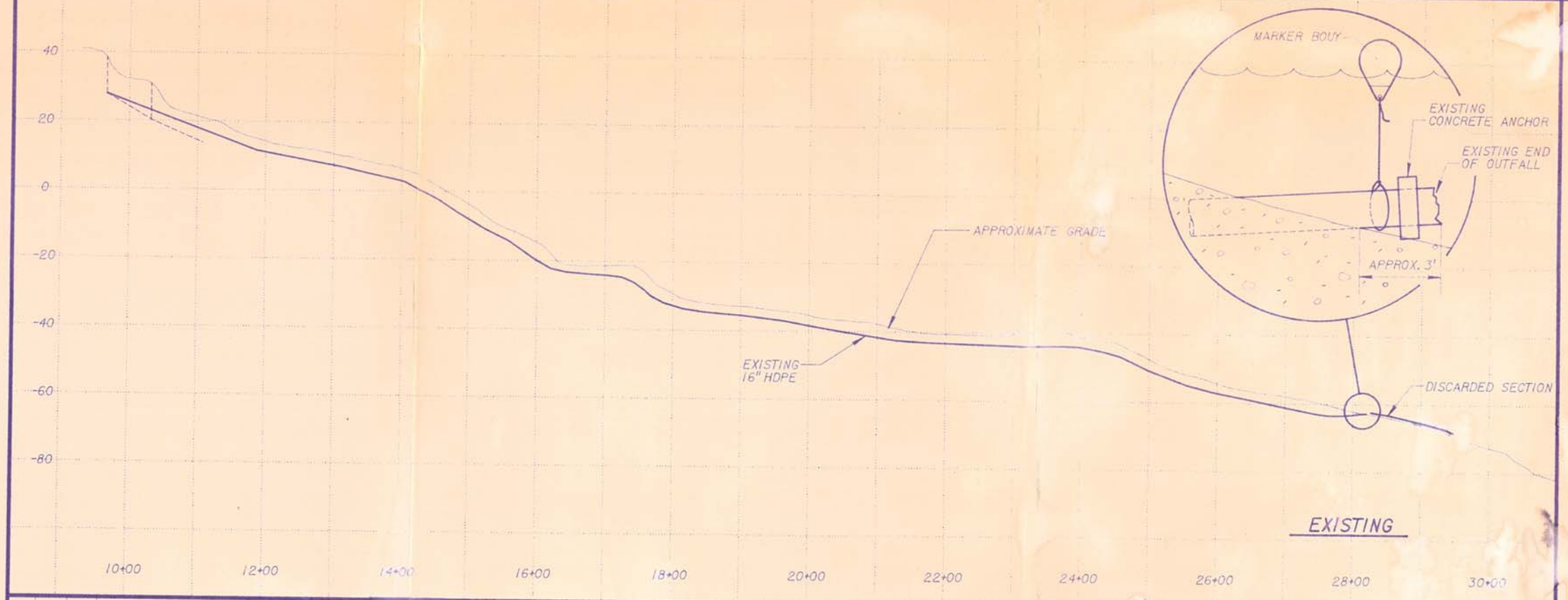

EXISTING

NOT[illegible]

1. [illegible] EXISTING PIPE FOR A DISTANCE OF 25'. CUT 25' OFF [illegible]WARD END OF EXISTING PIPE. CUT SHALL BE PERPENDICULAR [illegible]E CENTERLINE FOR INSTALLATION OF COUPLING AND CONNECTION [illegible] NEW PIPE.
2. [illegible]CAVATE FOR NEW PIPE AND ANCHORS AS NECESSARY FOR PIPE TO LAY WITH MINIMUM SLOPE OF .0014 FT/FT DOWN IN DIRECTION OF FLOW.
3. LAY PIPE, ANCHORS AND DIFFUSER ON EXISTING GRADE FROM POINT OF DAYLIGHTING OF BOTTOM OF NEW OUTFALL PIPE TO END OF NEW DIFFUSER. EXCEPT EXCAVATE AS NECESSARY TO MAINTAIN MINIMUM SLOPE OF .0014 FT/FT DOWN IN DIRECTION OF FLOW.

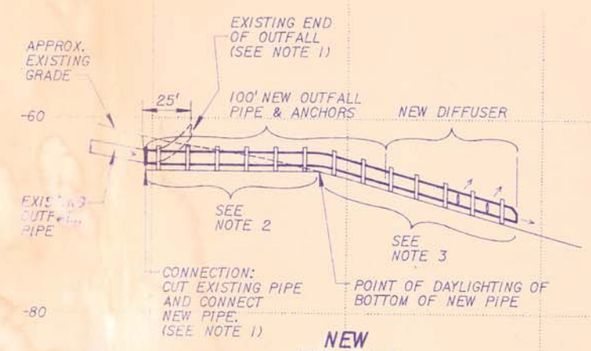

NEW

REV	DATE	BY	DESCRIPTION

SCALE: HORZ: 1" = 100' VERT: 1" = 20'

DATE PRINTED: DEC 2 1993

DESIGNED JWS
DRAWN LH & [illegible]
CHECKED SS
DATE

SUBMITTED
PROJECT ENGINEER R. C. E. NO. DATE
RECOMMENDED
MONTGOMERY WATSON R. C. E. NO. DATE

STATE OF ALASKA 4931H Jerome W. Sargent P.E.-CE 3849 PROFESSIONAL ENGINEER

MONTGOMERY WATSON
Juneau, Alaska
712 WEST 12th STREET
JUNEAU, ALASKA 99801
586-4447

APPROVED
APPROVED

CITY OF HAINES
MARINE OUTFALL

OUTFALL PIPELINE REPAIR
PLAN AND PROFILE

SHEET 2 OF 3 SHEETS

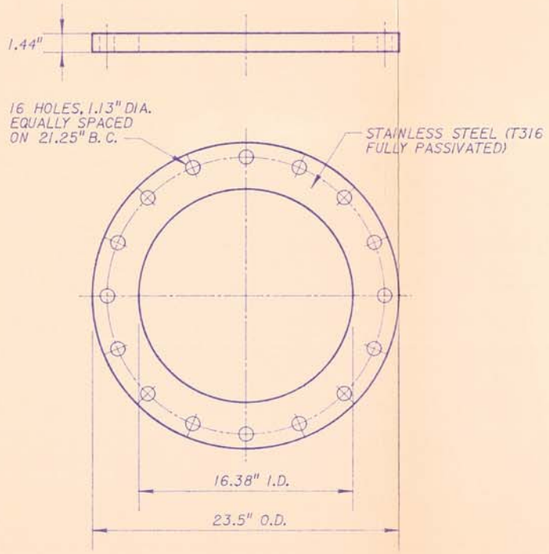

BACK-UP FLANGE

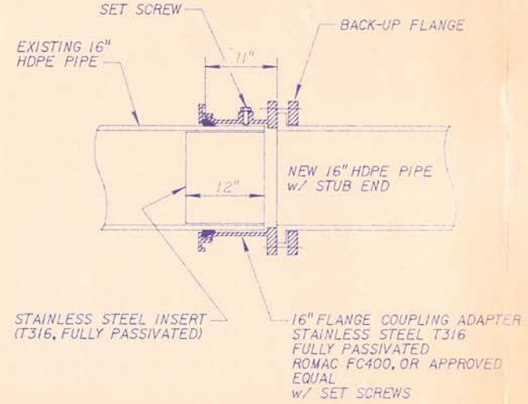

CONNECTION

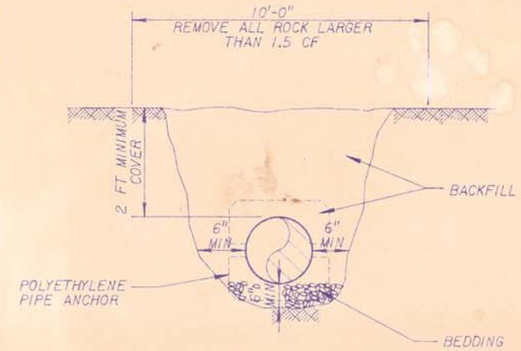

TRENCH DETAIL

(FROM 1985 DESIGN FOR ORIGINAL OUTFALL INSTALLATION. NOT USED THIS PROJECT. SHOWN FOR INFORMATION ONLY.)

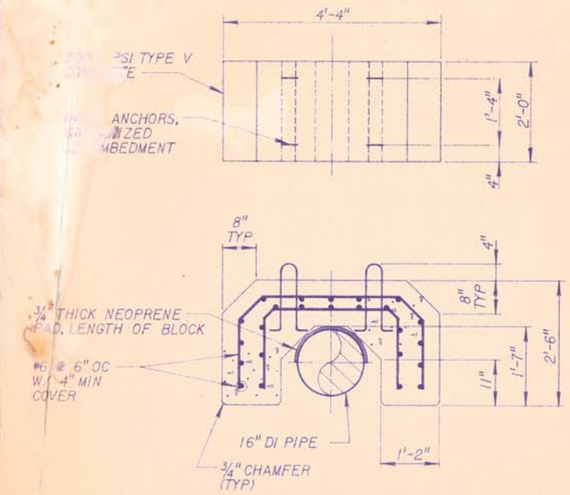

DUCTILE IRON PIPE ANCHOR

(FROM 1985 DESIGN FOR ORIGINAL OUTFALL INSTALLATION. USE FOR THIS PROJECT TO ANCHOR NEW DIFFUSER.)

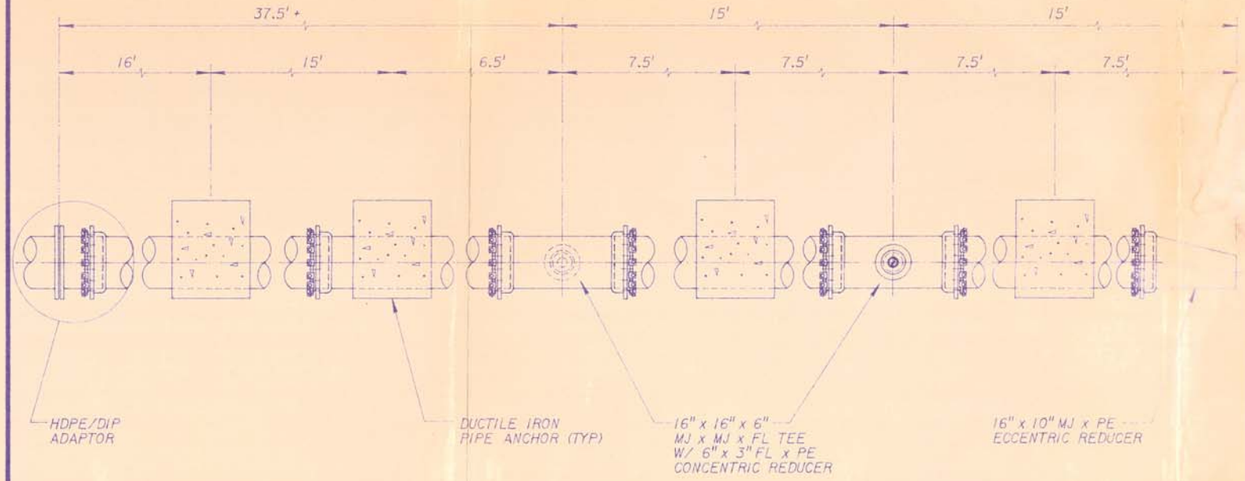

NOTE:
USE MECHANICAL JOINT DUCTILE
IRON PIPE w/MEGALUGS FOR DIFFUSER ASSEMBLY.

DIFFUSER DETAIL

(FROM 1985 DESIGN FOR ORIGINAL OUTFALL INSTALLATION. USE FOR THIS PROJECT)

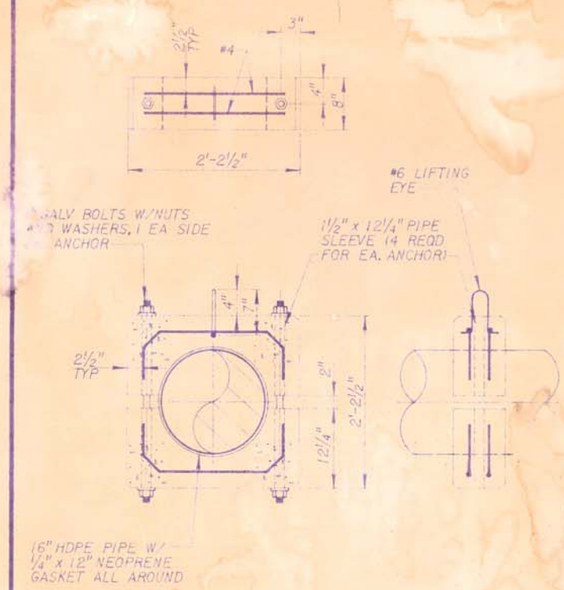

POLYETHYLENE PIPE ANCHOR

(FROM 1985 DESIGN FOR ORIGINAL OUTFALL INSTALLATION. USE FOR THIS PROJECT TO ANCHOR NEW OUTFALL PIPE [illegible])

HDPE/DIP ADAPTER

REV	DATE	BY	DESCRIPTION

SCALE: NONE

DATE PRINTED: DEC 2 1993

DESIGNED
DRAWN
CHECKED
T.A.L.

SUBMITTED
PROJECT ENGINEER R. C. E. NO. DATE
RECOMMENDED
MONTGOMERY WATSON R. C. E. NO. DATE

STATE OF ALASKA 49TH Jerome W. Sargent P.E.-CE 3849 REGISTERED PROFESSIONAL ENGINEER

MONTGOMERY WATSON
Juneau, Alaska
712 WEST 12th STREET
JUNEAU, ALASKA 99801
586-4411

APPROVED

CITY OF HAINES
MARINE OUTFALL
DETAILS

SHEET 3 OF 3 SHEETS