HAINES BOROUGH

PORTAGE COVE HARBOR EXPANSION

Volume 2 of 2

PLANS

AUGUST, 2016

PND # 102029.01

HAINES BOROUGH
PORTAGE COVE HARBOR EXPANSION

LOCATION MAP

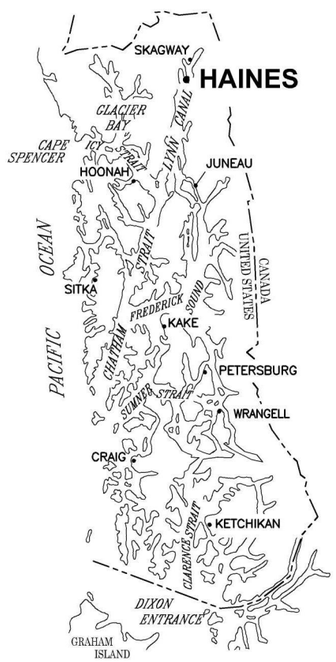

SOUTHEAST ALASKA

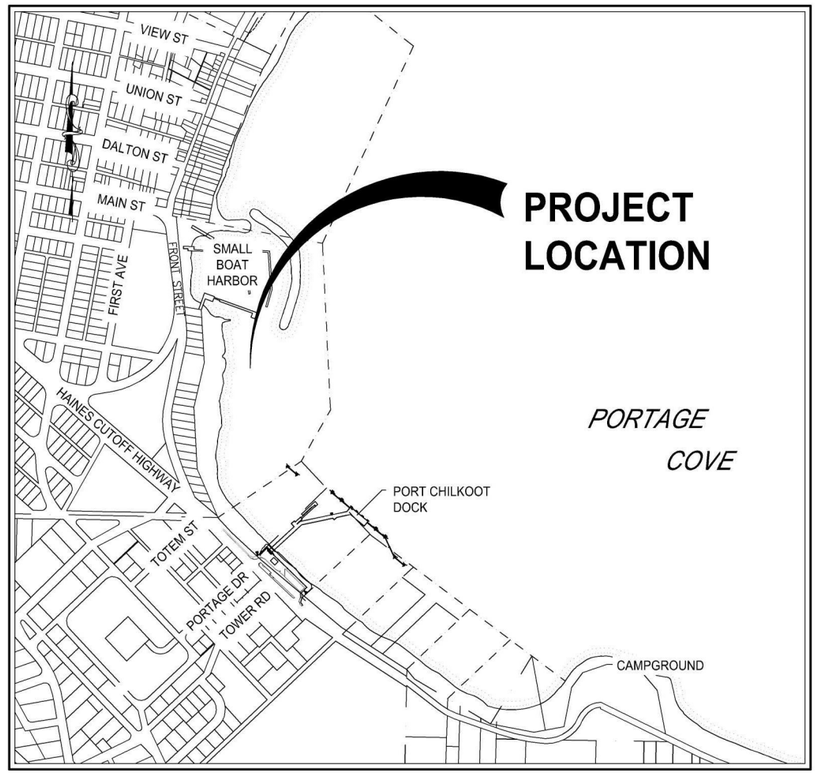

VICINITY MAP

SCALE FEET
0 500 1000

MAP ADAPTED FROM: HAINES BOROUGH GIS

DRAWING INDEX

SHEET NO.	DWG. NO.	TITLE
		GENERAL
1 OF 32	1.01	COVER SHEET, VICINITY MAPS AND DRAWING INDEX
2 OF 32	1.02	GENERAL NOTES, LEGEND AND ABBREVIATIONS
3 OF 32	1.03	EXISTING CONDITIONS, SURVEY CONTROL & BH LOCATIONS
4 OF 32	1.04	EXISTING CONDITIONS AND SITE PHOTOGRAPHS
5 OF 32	1.05	GENERAL SITE PLAN
6 OF 32	1.06	DEMOLITION, SALVAGE & DISPOSAL PLAN
7 OF 32	1.07	TRANSIENT FLOAT PLAN - PILE LAYOUT AND DETAILS
		WASTE WATER OUTFALL
8 OF 32	2.01	WASTEWATER OUTFALL PLAN & PROFILE
9 OF 32	2.02	WASTEWATER OUTFALL DETAILS
10 OF 32	2.03	WASTEWATER OUTFALL DIFFUSER DETAILS
		DREDGING
11 OF 32	3.01	DREDGING PLAN
12 OF 32	3.02	DREDGING SECTIONS
13 OF 32	3.03	DREDGING OFFSHORE DISPOSAL PLAN
		UPLANDS
14 OF 32	4.01	LAYOUT TABLES
15 OF 32	4.02	UPLAND GRADING AND DRAINAGE PLAN
16 OF 32	4.03	UPLAND SECTIONS
17 OF 32	4.04	STORM DRAIN DETAILS
		WAVE BARRIER
18 OF 32	5.01	WAVE BARRIER SITE PLAN
19 OF 32	5.02	WAVE BARRIER NORTH PARTIAL PLAN
20 OF 32	5.03	WAVE BARRIER SOUTH PARTIAL PLAN
21 OF 32	5.04	PARTIAL ELEVATION
22 OF 32	5.05	TYPICAL SECTIONS
23 OF 32	5.06	ROCK BREAKWATER SECTION
24 OF 32	5.07	PILE SCHEDULE
25 OF 32	5.08	PILE SCHEDULE
26 OF 32	5.09	BARRIER PILES AND WALERS
27 OF 32	5.10	BEARING PILE DETAILS
28 OF 32	5.11	BOX CAP DETAILS
29 OF 32	5.12	FENDER AND MARINE SIGNAL LIGHT
30 OF 32	5.13	LADDER
31 OF 32	5.14	PILE ANODES **ADDITIVE ALTERNATE 'B'**
34 OF 32	5.15	NAVIGATION STRUCTURE DETAILS

TIDAL DATA

HIGHEST OBSERVED WATER LEVEL (APPROX.) = 26.5 FEET
MEAN HIGHER HIGH WATER = 16.7 FEET
MEAN HIGH WATER = 15.7 FEET
MEAN LOWER WATER = 1.6 FEET
MEAN LOWER LOW WATER = 0 FEET
LOWEST OBSERVED WATER LEVEL (APPROX.) = -6.5 FEET

FROM: NOAA NOS/CO-OPS STATION ID:9452400 SKAGWAY, ALASKA

PROJECT SCHEDULE

DESCRIPTION	SCHEDULE
1. SUBSTANTIAL COMPLETION	MAY 31, 2018
2. FINAL COMPLETION OF ALL WORK UNDER THIS CONTRACT.	JUNE 30, 2018

PND ENGINEERS, INC. (PND) IS NOT RESPONSIBLE FOR SAFETY PROGRAMS, METHODS OR PROCEDURES OF OPERATION, OR THE CONSTRUCTION OF THE DESIGN SHOWN ON THESE DRAWINGS. DRAWINGS ARE FOR THE USE OF THIS PROJECT ONLY AND ARE NOT INTENDED FOR REUSE WITHOUT WRITTEN APPROVAL FROM PND. DRAWINGS ARE ALSO NOT TO BE USED IN ANY MANNER THAT WOULD CONSTITUTE A DETRIMENT DIRECTLY OR INDIRECTLY TO PND.

REVISIONS

REV.	DATE	DESCRIPTION	DWN.	CKD.	APP.

PND ENGINEERS, INC.
9360 Glacier Highway, Ste. 100
Juneau, Alaska 99801
Phone: 907-586-2093
Fax: 907-586-2099
www.pndengineers.com

DESIGN: TCB CHECKED: CRS
DRAWN: PJD APPROVED: CRS
SCALE: AS SHOWN

STATE OF ALASKA 49TH Charles R. Somerville CE-8845 REGISTERED PROFESSIONAL ENGINEER
DATE: 8/23/16

HAINES BOROUGH
PORTAGE COVE
HARBOR EXPANSION

SHEET TITLE: COVER SHEET, VICINITY MAPS AND DRAWING INDEX

PND PROJECT NO.: 102029.01

1.01

SHEET 1 OF 32

GENERAL NOTES

1. THE CONTRACTOR SHALL OBTAIN A CONSTRUCTION GENERAL PERMIT (CGP) IN ACCORDANCE WITH CONTRACT SPECIFICATIONS AND STATE LAW. THE CONTRACTOR SHALL COMPLY WITH THE PROVISIONS OF THE CGP AT ALL TIMES INCLUDING THE DEVELOPMENT, IMPLEMENTATION AND MAINTENANCE OF A STORM WATER POLLUTION PREVENTION PLAN WITH APPROPRIATE SPILL PREVENTION AND RESPONSE MEASURES.

2. MATCH EXISTING GRADES AT PROJECT LIMITS AND WHERE REQUIRED TO MATCH ELEVATIONS AT EXISTING SURFACES.

3. THE LOCATIONS AND ELEVATIONS OF EXISTING FEATURES AND UTILITIES SHOWN ON THE DRAWINGS ARE APPROXIMATE. UTILITIES SHOWN ARE TAKEN FROM EXISTING AS-BUILT RECORDS AND OTHER SOURCES. ADDITIONAL UTILITIES MAY BE PRESENT HOWEVER ARE NOT SHOWN. THE CONTRACTOR SHALL VERIFY ALL UTILITY LOCATIONS IN THE FIELD AS NECESSARY PRIOR TO BEGINNING WORK. THE HORIZONTAL AND VERTICAL LOCATIONS OF ALL UTILITIES ENCOUNTERED IN THE FIELD SHALL BE RECORDED ON THE CONTRACTOR'S RECORD DRAWINGS. CONTACT LOCAL UTILITIES AT THE FOLLOWING NUMBERS FOR LOCATE SERVICE A MINIMUM OF TWO BUSINESS DAYS PRIOR TO ANY EXCAVATION:

WATER AND WASTE MATERIAL	**(907) 766-2237 OR 766-2200**
POWER AND LIGHT (AP&T)	**(907) 766-2331**
CATV	**(907) 766-2137**
TELEPHONE (GTE)	**(907) 766-2311**

4. PROPERTY DISTURBED DURING CONSTRUCTION SHALL BE RESTORED TO ITS PRE-CONSTRUCTION CONDITION OR BETTER AT NO ADDITIONAL COST.

5. PROPERTY LINE LOCATIONS USED IN THESE PLANS ARE DERIVED FROM RECORD PLATS AND DO NOT REPRESENT A BOUNDARY SURVEY.

6. PROTECT ALL EXISTING UTILITIES DURING CONSTRUCTION. NO ASSURANCE IS GIVEN THAT THE INDICATED POSITION OF ANY EXISTING UTILITY IS CORRECT OR THAT THE INFORMATION IS COMPLETE. ALL LOCATIONS OF EXISTING UTILITIES ARE APPROXIMATE AND IT SHALL BE THE CONTRACTOR'S RESPONSIBILITY TO VERIFY THE CORRECT AND TRUE LOCATION AS TO AVOID DAMAGE OR DISTURBANCE. DAMAGE TO EXISTING SITE FACILITIES SHALL BE REPAIRED BY THE CONTRACTOR AT NO COST TO THE OWNER.

7. OVERHEAD UTILITIES INCLUDING ELECTRICAL POWER, TELEPHONE, CABLE TV, AND OTHER OVERHEAD LINES ARE GENERALLY NOT SHOWN, THE LINES THAT ARE SHOWN ARE LOCATED BY POINT-TO-POINT, POLE-TO-POLE. DETERMINE THE EXTENT OF HAZARDS OR IMPACTS ON CONSTRUCTION ACTIVITIES CREATED BY OVERHEAD OR UNDERGROUND LINES IN ALL AREAS AND FOLLOW PROCEDURES DURING CONSTRUCTION AS REQUIRED BY LAW. PRIOR TO CONSTRUCTION, MEET WITH UTILITY OWNERS TO DETERMINE THE EXTENT OF HAZARDS AND TAKE PRECAUTIONS AS REQUIRED TO PROTECT PERSONS AND PROPERTY AND TO AVOID DISRUPTION OF SERVICE.

8. GRADING AND ALIGNMENT OF PIPE, STRUCTURES & FINAL SURFACING ARE SUBJECT TO MINOR REVISIONS BY THE ENGINEER TO FIT SITE CONDITIONS. GRADE ALL IMPROVEMENTS WITH POSITIVE DRAINAGE AWAY FROM BUILDINGS TO DITCHES, SWALES OR STORM DRAIN INLETS.

9. THE DRAWINGS DO NOT NECESSARILY SHOW ALL TREES, BUSHES OR OTHER PLANTINGS THAT WILL BE ENCOUNTERED DURING CONSTRUCTION ACTIVITIES.

10. ALL ITEMS DESIGNATED TO BE REMOVED, INCLUDING PAVEMENT, SHALL BE DISPOSED OF AT CONTRACTOR-PROVIDED DISPOSAL SITE, APPROVED BY THE ENGINEER, EXCEPT AS NOTED.

11. CONTRACTOR SHALL REFERENCE ALL EXISTING SURVEY MONUMENTS PRIOR TO CONSTRUCTION. DISTURBED MONUMENTS SHALL BE RESET OR REPLACED EXCEPT WHERE MONUMENT WOULD BE A HAZARD AS DETERMINED BY THE ENGINEER. EXISTING SURVEY MONUMENTS MAY NOT BE SHOWN ON THE DRAWINGS. ALL WORK SHALL BE DONE BY, OR UNDER THE DIRECTION OF, AN ALASKA REGISTERED LAND SURVEYOR.

12. THE CONTRACTOR IS RESPONSIBLE FOR ANY AND ALL DAMAGES TO PRIVATE AND PUBLIC PROPERTY ASSOCIATED WITH THE CONSTRUCTION ACTIVITIES, INCLUDING BUT NOT LIMITED TO DAMAGES CAUSED BY COMPACTION EFFORTS.

13. HORIZONTAL DIMENSIONS ON PLAN AND PROFILE SHEETS TO PIPELINES, MANHOLES, AND OTHER FACILITIES, ARE TO THE CENTERLINES OF THOSE FACILITIES UNLESS SPECIFICALLY NOTED OTHERWISE. PIPELINE LENGTHS ARE MEASURED HORIZONTALLY. (I.E. PLANAR – NOT CORRECTED FOR SLOPE)

LEGEND

EXISTING	THIS PROJECT	
OHEx		OVERHEAD ELECTRICAL
FUx		BURIED FUEL LINE
EUx		ELECTRICAL (UNDERGROUND)
Wx		WATER
SSx	SS	SANITARY SEWER
	SSA	SANITARY SEWER (ABANDONED)
CUx		COMMUNICATION (CABLE/TEL)
SDx	SD OR 12	STORM DRAIN
FMx		FORCE MAIN
	? ?	INFERRED SOIL STRATUM CHANGE
		PROPERTY LINE
		GRADE BREAK
	X X	GEOTEXTILE FABRIC
	SB	SILT CONTAINMENT BOOM
		GUY WIRE ANCHOR
		SURVEY CONTROL
		NAVIGATION AID
		UTILITY POLE
		BOLLARD
		CURB & GUTTER
	E	ELECTRICAL TRANSFORMER
	H	ELECTRICAL HANDHOLE
		FIRE HYDRANT
		LIGHT POLE
	S1	SANITARY SEWER MANHOLE
		STORM DRAIN STRUCTURE
		STORM DRAIN CURB INLET
		SIGN
		JERSEY BARRIER
		TREE/VEGETATION
		SIDEWALK RAMP DIRECTION
		GUARDRAIL
	WV	WATER VALVE
	5 25	LAYOUT POINT
		LAYOUT RADIUS
		ARTWORK/ DISPLAYS
		ARMOR ROCK, UNO
		DREDGE BASIN OR SHOT ROCK BORROW PLAN VIEW
		BASE COURSE GRADING C-1

ABBREVIATIONS

A	
@	AT
AC	ASBESTOS CEMENT PIPE
ACP	ASPHALT CONCRETE PAVEMENT
ADA	AMERICANS WITH DISABILITIES ACT
ADJ	ADJUSTABLE
APF	ASSOCIATED PILE AND FITTING CORP.
APPROX. or APPX.	APPROXIMATE
ATS	ALASKA TIDELANDS SURVEY
AV	AIR RELEASE VALVE
B	
BCC	BEGINNING OF CURB CUT
BFV	BUTTERFLY VALVE
BH	BOREHOLE
BLDG	BUILDING
BOP/BP	BEGINNING OF PROJECT
BTM, BOT	BOTTOM
C	
C&G	CURB & GUTTER
CB	CATCH BASIN
CI	CAST IRON
CIP	CAST-IN-PLACE
CJ	CONTROL JOINT
℄	CENTER LINE
CLR	CLEAR
CMP	CORRUGATED METAL PIPE
CO	CLEANOUT
C.O.E.	CORPS OF ENGINEERS
COMM	COMMUNICATION
CONC.	CONCRETE
CP	COMPLETE PENETRATION
CPEP/CPP	CORRUGATED POLYETHYLENE PIPE
COR	CORNER
CSC	COUNTERSINK
CTR	CENTER
CY	CUBIC YARD
D	
DCP	DISSIMILAR PIPE COUPLING
D/DIA	DIAMETER
DBL	DOUBLE
DEMO	DEMOLITION
DL	DEAD LOAD
DIP	DUCTILE IRON PIPE
DIM	DIMENSION
DN	DOWN
DTL	DETAIL
E	
E	EAST
EA.	EACH
EC	EDGE OF CONCRETE
ECC	END OF CURB CUT
EG	EXISTING GRADE
EJ	EXPANSION JOINT
EL/ELEV	ELEVATION
ELEL	ELECTRICAL
EP	END OF PAVEMENT
EP	END PROJECT
EQ	EQUAL
EQUIP	EQUIPMENT
EST	ESTIMATE
EW	EACH WAY
EXC	EXCAVATE
EXIST	EXISTING
F	
FC	FACE OF CURB
FD	FLOOR DRAIN
FF	FINISHED FLOOR
FG	FINISHED GRADE
FH	FIRE HYDRANT, FLAT HEAD
FIN	FINISH (ED)
FM	FORCE MAIN SEWER
FND	FOUNDATION
FOC	FACE OF CURB
FT	FOOT
FTG	FOOTING
FL	FLOWLINE OR FLANGE
G	
GAL	GALLON
GALV	GALVANIZED
GB	GRADE BREAK
GPM	GALLONS PER MINUTE
GRD	GROUND
GV	GATE VALVE
H	
H&T	HUB & TACK
HD	HEAVY DUTY
HDG	HOT-DIPPED GALVANIZED
HDPE	HIGH DENSITY POLYETHYLENE
HORIZ	HORIZONTAL
HSE	HOUSE
HT	HEIGHT
HWY.	HIGHWAY
I	
IAW	IN ACCORDANCE WITH
ID	INSIDE DIAMETER
IE	INVERT ELEVATION
IN	INCH
IP	IRON PIPE
INCL	INCLUDE (D) (ING)
INSUL	INSULATE (D) (ION)
INV	INVERT
J	
JB	JUNCTION BOX
L	
LBS	POUNDS
LF	LINEAR FEET
LL	LIVE LOAD
LOC	LOCATION
LS	LUMP SUM
M	
MAX	MAXIMUM
M.E.	MATCH EXISTING
MECH	MECHANICAL
MFR	MANUFACTURE (R)
MH	MANHOLE
MJ	MECHANICAL JOINT
MI	MALLEABLE IRON
MIN	MINIMUM
MLLW	MEAN LOWER LOW WATER
MSF	1000 SQUARE FEET
MSE	MECHANICALLY STABILIZED EARTH
MTL	MATERIAL (S)
N	
N	NORTH
NFS	NON FROST SUSCEPTIBLE
NIC	NOT IN CONTRACT
NO	NUMBER
NTS	NOT TO SCALE
O	
OBD	OVERBURDEN
OC	ON CENTER
OD	OUTSIDE DIAMETER
OG	ORIGINAL GOUND
OHE	OVERHEAD ELECTRICAL
OWS	OIL-WATER SEPARATOR
OPP	OPPSITE
P	
P	PIPE
PC	POINT OF CURVATURE, PIECE
PCC	PRECAST CONCRATE
	POINT OF COMPOUND CURVATURE
PE	POLYETHYLENE
PED	PEDESTAL
PER	PERIMETER
PERF	PERFORATE (D)
PI	POINT OF INTERSECTION
PLWD	PLYWOOD
PL	PROPERTY LINE, PLATE
POC	POINT OF CURVE
PP	POLYPROPYLENE
PRC	POINT OF REVERSE CURVATURE
PROJ	PROJECT
PRKG	PARKING
PRV	PRESSURE REDUCING VALVE
PSI	POUND PER SQUARE INCH
PT	POINT, PRESSURE TREATED,
	POINT OF TANGENCY
PVC	POINT OF VERTICAL CURVATURE,
	POLY-VINYL CHLORIDE
PVI	POINT OF VERTICAL INTERSECTION
Q	
QTY	QUANTITY
R	
R/RAD	RADIUS
RE	RIM ELEVATION
REF	REFERENCE
REINF	REINFORCEMENT
REQD	REQUIRED
RET	RETAINING
RO	ROUGH OPENING
ROW	RIGHT OF WAY
S	
S	SOUTH
SCHED/SCH	SCHEDULE
SD	STORM DRAIN
SDI	STORM DRAIN INLET STRUCTURE
SDO	STORM DRAIN OUTLET STRUCTURE
SDR	STANDARD DIMENSION RATIO
SF	SQUARE FOOT
SHLDR	SHOULDER
SI	STREET INTERSECTION
SPEC	SPECIFICATION (S)
SQ	SQUARE
SRB	SHOT ROCK BORROW
SSC	SANITARY SEWER CONNECTION
SS	STAINLESS STEEL, SANITARY SEWER
SDMH	STORM DRAIN MANHOLE
SSMH	SANITARY SEWER MANHOLE
STA	STATION
STD	STANDARD
STL	STEEL
STRG	STRONG
SW	SIDEWALK
SWR	SEWER
SY	SQUARE YARD
SYM	SYMMETRICAL
T	
t	THICK
T&B	TOP AND BOTTOM
T&G	TONGUE AND GROOVE
TBC	TOP BACK OF CURB
TBD	TO BE DETERMINED
TBM	TEMPORARY BENCH MARK
TD	TRENCH DRAIN
TEL	TELEPHONE
TEMP	TEMPERATURE, TEMPORARY
TH	TEST HOLE
THK	THICK
TRANS	TRANSVERSE
TV	TELEVISION
TYP	TYPICAL
U	
UBC	UNIFORM BUILDING CODE
UE	UNDERGROUND ELECTRIC
UMC	UNIFORM MECHANICAL CODE
UHMW	ULTRA HIGH MOLECULAR WEIGHT
UON/UNO	UNLESS OTHERWISE NOTED
UPC	UNIFORM PLUMBING CODE
USACE	US ARMY CORPS OF ENGINEERS
V	
VB	VALVE BOX
VERT	VERTICAL
VG	VALLEY GUTTER
W	
W	WEST
W/	WITH
WD	WOOD
WELDMT	WELDMENT
WL	WATERLINE
WQU	WATER QUALITY UNIT
WV	WATER VALVE
WW	WATER WATER
WWTP	WASTE WATER TREATMENT PLANT
W/O	WITHOUT
X	
XFMR	TRANSFORMER
<PT	ANGLE POINT

HAINES BOROUGH ALASKA

REVISIONS

REV.	DATE	DESCRIPTION	DWN.	CKD.	APP.

PND ENGINEERS, INC.
9360 Glacier Highway, Ste. 100
Juneau, Alaska 99801
Phone: 907-586-2093
Fax: 907-586-2099
www.pndengineers.com

DESIGN: TCB CHECKED: CRS
DRAWN: KLL APPROVED: CRS
SCALE: NTS

STATE OF ALASKA 49TH Charles R. Somerville CE-8845 REGISTERED PROFESSIONAL ENGINEER
DATE: 8/23/16

HAINES BOROUGH PORTAGE COVE HARBOR EXPANSION

SHEET TITLE: **GENERAL NOTES, LEGEND AND ABBREVIATIONS**

PND PROJECT NO.: 102029.01

1.02

SHEET 2 OF 32

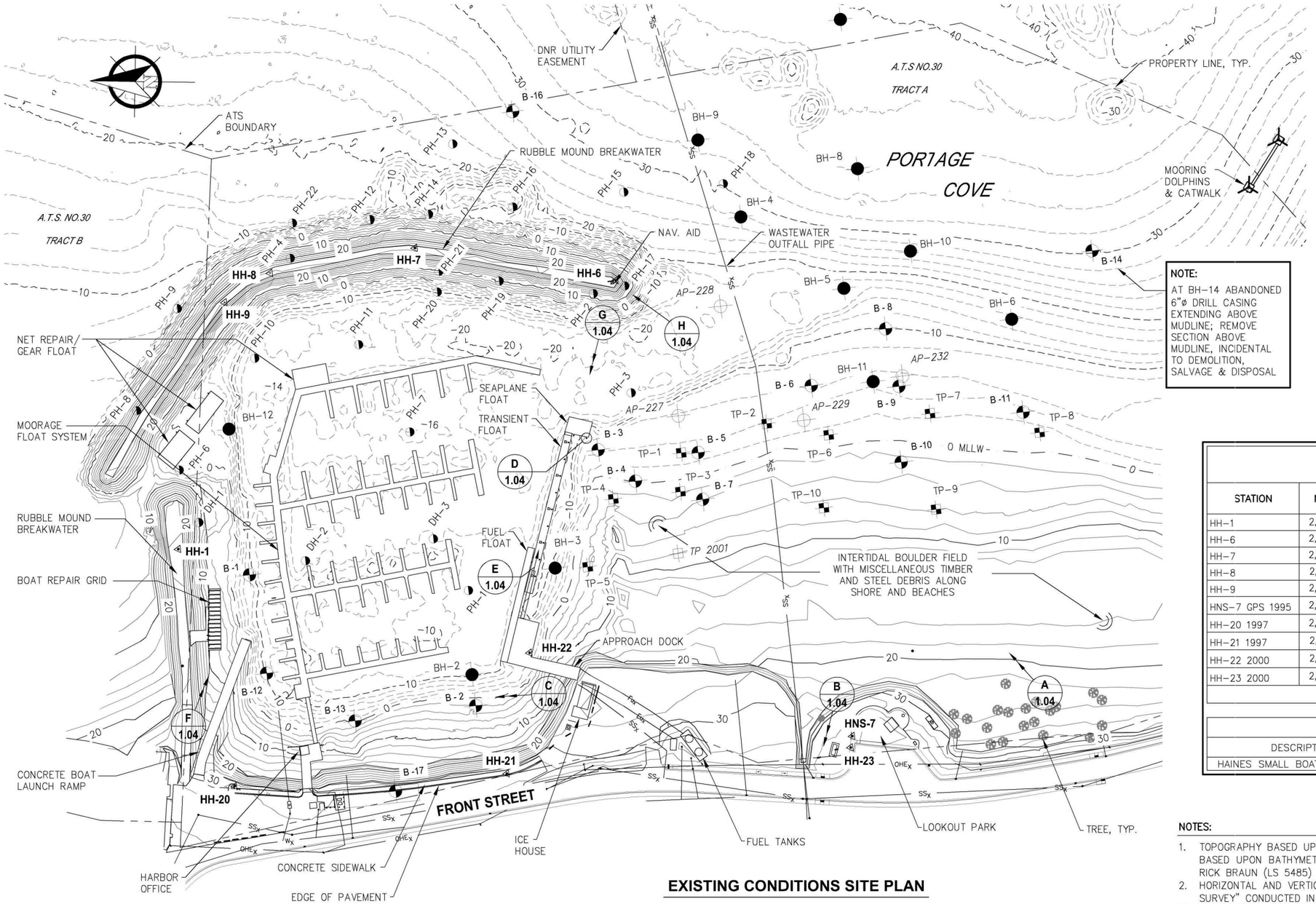

EXISTING CONDITIONS SITE PLAN

NOTE:
AT BH-14 ABANDONED 6"ø DRILL CASING EXTENDING ABOVE MUDLINE; REMOVE SECTION ABOVE MUDLINE, INCIDENTAL TO DEMOLITION, SALVAGE & DISPOSAL

LEGEND

- B-1 — PND ENGINEERS, INC.: BOREHOLE, (2014)
- BH-2 — PND ENGINEERS, INC.: BOREHOLE, (2012)
- TP-8 — PND ENGINEERS, INC.: TEST PIT, (2010)
- AP-232 — U.S. ARMY CORPS OF ENGINEERS: BOREHOLE, (2004) LOCATION APPROXIMATE
- TP 2001 — U.S. ARMY CORPS OF ENGINEERS: TEST PIT, (2000) LOCATION APPROXIMATE
- DH-1, PH-1 — U.S. ARMY CORPS OF ENGINEERS: PROBE AND DRILLHOLES, (1957, 1973, 1975) LOCATION APPROXIMATE
- A 1.04 — SITE PHOTO ORIENTATION

SURVEY CONTROL DATA

STATION	NORTHING	EASTING	ELEV (MLLW)	DESCRIPTION
HH-1	2,707,596.79	2,353,756.26	25.64	USACE SURVEY MARK SBC
HH-6	2,706,922.52	2,354,071.75	25.74	USACE SURVEY MARK SBC
HH-7	2,707,206.44	2,354,151.36	26.12	USACE SURVEY MARK SBC
HH-8	2,707,421.75	2,354,139.73	24.73	USACE SURVEY MARK SBC
HH-9	2,707,492.29	2,354,105.04	25.52	USACE SURVEY MARK SBC
HNS-7 GPS 1995	2,706,656.27	2,353,376.15	35.62	AKDOT 3.25" DOMED BRASS CAP
HH-20 1997	2,707,554.58	2,353,405.42	32.22	USACE 3.25" DOMED BRASS CAP
HH-21 1997	2,707,160.36	2,353,378.82	33.55	USACE 3.25" DOMED BRASS CAP
HH-22 2000	2,707,107.68	2,353,549.09	26.66	USACE 3.25" DOMED BRASS CAP
HH-23 2000	2,706,660.66	2,353,360.01	35.54	USACE 3.25" DOMED BRASS CAP
SEE NOTE 2 FOR CONTROL DATA DETAILS.				

☆ NAVIGATION AIDS ☆

DESCRIPTION	USCG No.	NORTHING	EASTING
HAINES SMALL BOAT HARBOR LIGHT 2	23910	2,706,927.5	2,354,070.8

NOTES:

1. TOPOGRAPHY BASED UPON FIELD SURVEY BY PND CONDUCTED IN MAY 2013. BATHYMETRY BASED UPON BATHYMETRIC SURVEYS CONDUCTED WITH PND, CONCURRENT (MAY 2013) BY RICK BRAUN (LS 5485) AND DAVID EVANS ASSOCIATES.
2. HORIZONTAL AND VERTICAL CONTROL PROVIDED BY THE USACE "HAINES HARBOR CONDITION SURVEY" CONDUCTED IN JULY 2011. SEE ADDITIONAL NOTES FROM THIS SURVEY.
3. ALL EXISTING UTILITIES ARE SHOWN APPROXIMATE FROM SURVEYED INFORMATION AND ALSO AS-BUILT RECORDS PROVIDED BY THE HAINES BOROUGH.
4. BOREHOLE LOGS & ADDITIONAL GEOTECHNICAL INFORMATION AVAILABLE IN HAINES BOROUGH SOUTH PORTAGE COVE HARBOR EXPANSION GEOTECHNICAL ENGINEERING REPORT, MARCH 2015, PND ENGINEERS, INC.

HAINES BOROUGH ALASKA

REVISIONS

REV.	DATE	DESCRIPTION	DWN.	CKD.	APP.

PND ENGINEERS, INC.
9360 Glacier Highway, Ste. 100
Juneau, Alaska 99801
Phone: 907-586-2093
Fax: 907-586-2099
www.pndengineers.com

DESIGN: TCB CHECKED: CRS
DRAWN: PJD APPROVED: CRS
SCALE: SCALE IN FEET 0 80 160 FT.

STATE OF ALASKA 49TH Charles R. Somerville CE-8845 REGISTERED PROFESSIONAL ENGINEER
DATE: 8/23/16

HAINES BOROUGH PORTAGE COVE HARBOR EXPANSION

SHEET TITLE:
EXISTING CONDITIONS, SURVEY CONTROL & BH LOCATIONS

PND PROJECT NO.: 102029.01

1.03

SHEET 3 OF 32

A INTERTIDAL BOULDERS W/ TIMBER, CONCRETE, STEEL DEBRIS AND ORGANICS

B ARTWORK/ DISPLAY TO BE RELOCATED BY OWNER

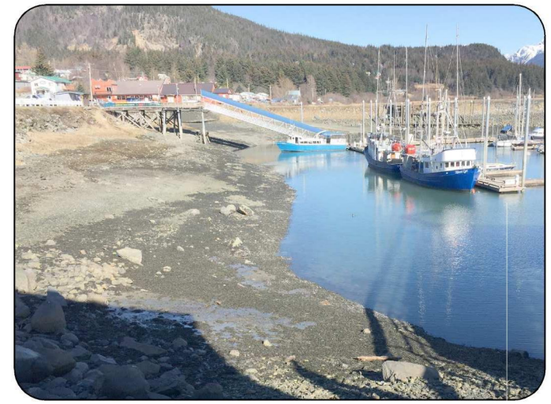

C INNER HARBOR DREDGE AREA LOOKING NORTH

D SEAPLANE FLOAT PILE HOOPS TO BE REMOVED, SALVAGED AND REINSTALLED BY CONTRACTOR; FLOAT RELOCATED AND REINSTALLED BY OWNER

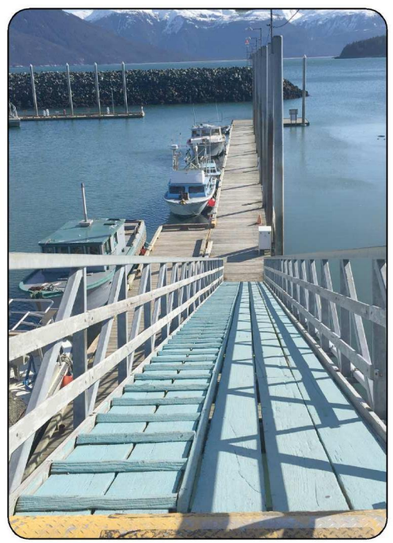

E TRANSIENT FLOAT PILES TO BE REPLACED EXISTING LIGHT FIXTURES TO BE SALVAGED AND REINSTALLED BY CONTRACTOR. POWER CABLE TO BE SALVAGED BY CONTRACTOR„ POWER CABLE TO BE INSTALLED BY OWNER

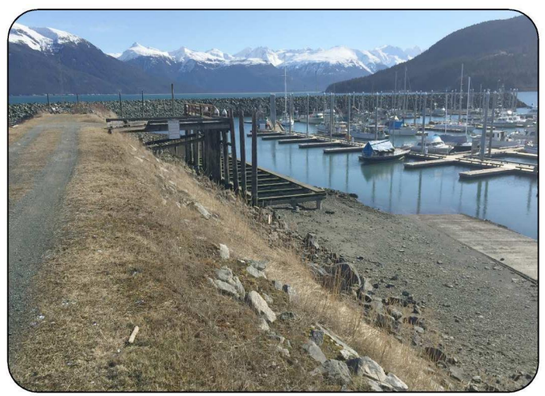

F DREDGE AREA INNER HARBOR LOOKING EAST

G DREDGE AREA LOOKING WEST AT TRANSIENT FLOAT

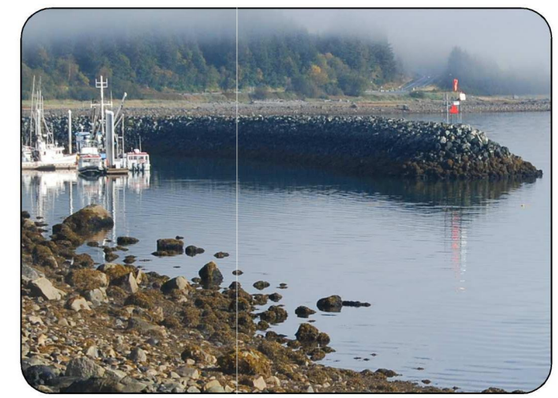

H EXISTING USACE RUBBLE MOUND BREAKWATER AND NAVIGATION AID

HAINES BOROUGH ALASKA

REVISIONS

REV.	DATE	DESCRIPTION	DWN.	CKD.	APP.

PND ENGINEERS, INC.

9360 Glacier Highway, Ste. 100
Juneau, Alaska 99801

Phone: 907-586-2093
Fax: 907-586-2099
www.pndengineers.com

DESIGN: TCB CHECKED: CRS
DRAWN: PJD APPROVED: CRS
SCALE: NTS

STATE OF ALASKA 49TH Charles R. Somerville CE-8845 REGISTERED PROFESSIONAL ENGINEER
DATE: 8/23/16

HAINES BOROUGH
PORTAGE COVE
HARBOR EXPANSION

SHEET TITLE:
EXISTING CONDITIONS AND SITE PHOTOGRAPHS

PND PROJECT NO.: 102029.01

1.04

SHEET 4 OF 32

USACE RUBBLE MOUND BREAKWATER

NAVIGATION AID

WAVE BARRIER

RECONFIGURED BREAKWATER ARMOR ROCK

WASTEWATER OUTFALL CONTINUES, SEE SHT 2.01.

* BH-14

NOTE: AT BH-14 ABANDONED 6"ø DRILL CASING EXTENDING ABOVE MUDLINE; REMOVE SECTION ABOVE MUDLINE, INCIDENTAL TO DEMOLITION, SALVAGE & DISPOSAL

BASE BID

ADD ALT C

NOTE: ADDITIVE ALTERNATE BOUNDARIES SHOWN APPROXIMATE THIS DRAWING.

EXISTING NET REPAIR/ GEAR FLOATS, TYP.

DREDGE BASIN LIMIT, TYP.

DREDGE BASIN LIMIT **(BASE BID)**

DREDGE BASIN LIMIT **(ADD ALT C)**

EXISTING SEAPLANE FLOAT

DREDGE BASIN, −12 MLLW **(ADD ALT A)**

(8) 16" ø STEEL PIPE PILES

DREDGE BASIN, −15 MLLW

NEW WASTEWATER OUTFALL

(9) 12"ø STEEL PILES

EXISTING TRANSIENT FLOAT

EXISTING MOORAGE FLOATS

(E) BOAT GRID

HH-1

EXISTING FUEL FLOAT

SILT BOOM PER SPECIFICATIONS, APPROX. LOCATION

ARMOR ROCK SLOPE, TYP.

UPLANDS PARKING AREA, SHOT ROCK BORROW SURFACE

STORM DRAIN OUTFALL

APPROX. SHOULDER EXISTING PARKING AREA, TYP.

TREES TO REMAIN

DREDGE BASIN, −15 MLLW **(ADD ALT A)**

EXISTING PARKING AREA RE-GRADED w/ BASE COURSE GRADING C1 SURFACE

APPROX. CONTRACTOR STAGING AREA LIMITS

STORM DRAIN SYSTEM

(E) ICE HOUSE

(E) RESTROOM

(E) FUEL TANKS

FRONT STREET

(E) APPROACH DOCK

(E) ARTWORK

(E) LOOKOUT PARK

(E) MEMORIAL

NOTE:
MAINTAIN PUBLIC ACCESS TO APPROACH DOCK & SOUTH SIDE OF FUEL TANKS, APPROX. AS SHOWN DURING CONSTRUCTION; REMAINDER OF EXISTING PARKING AREA SHALL BE CONTRACTOR STAGING; FINAL LIMITS SHALL BE COORDINATED WITH OWNER

HAINES BOROUGH ALASKA

REVISIONS

REV.	DATE	DESCRIPTION	DWN.	CKD.	APP.

P N D ENGINEERS, INC.

9360 Glacier Highway, Ste. 100
Juneau, Alaska 99801

Phone: 907-586-2093
Fax: 907-586-2099
www.pndengineers.com

DESIGN: TCB CHECKED: CRS
DRAWN: PJD APPROVED: CRS

SCALE: SCALE IN FEET 0 50 100 FT.

STATE OF ALASKA 49TH Charles R. Somerville CE-8845 REGISTERED PROFESSIONAL ENGINEER

DATE: 8/23/16

HAINES BOROUGH PORTAGE COVE HARBOR EXPANSION

SHEET TITLE: **GENERAL SITE PLAN**

1.05

PND PROJECT NO.: 102029.01

SHEET 5 OF 32

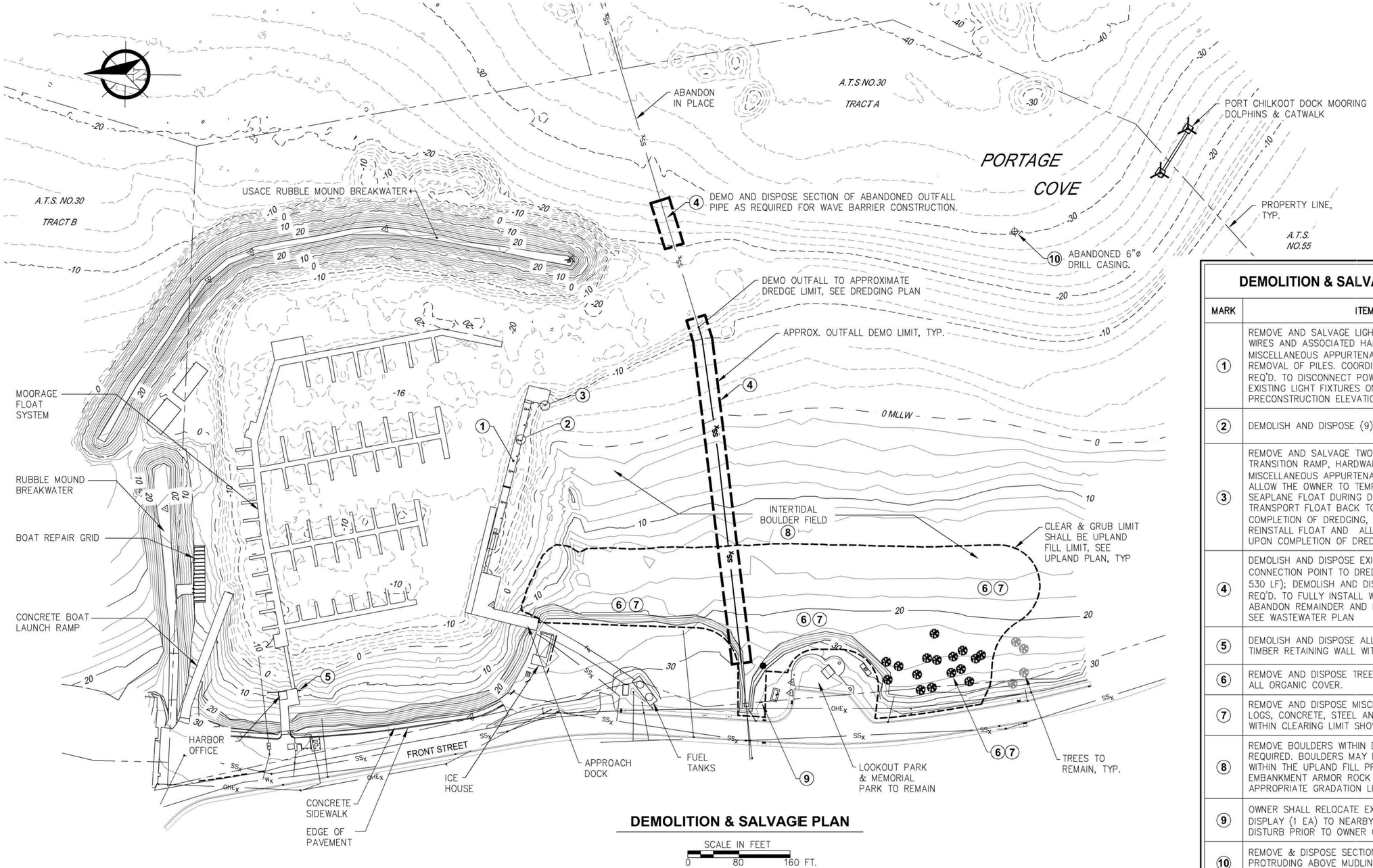

DEMOLITION & SALVAGE PLAN

SCALE IN FEET
0 80 160 FT.

DEMOLITION & SALVAGE SUMMARY TABLE

MARK	ITEM	BASE BID/ ADD ALT
1	REMOVE AND SALVAGE LIGHT FIXTURES, OVERHEAD WIRES AND ASSOCIATED HARDWARE AND MISCELLANEOUS APPURTENANCES AS REQ'D. FOR REMOVAL OF PILES. COORDINATE WITH UTILITY AS REQ'D. TO DISCONNECT POWER. REINSTALL EXISTING LIGHT FIXTURES ON NEW PILES TO PRECONSTRUCTION ELEVATION.	BASE BID
2	DEMOLISH AND DISPOSE (9) 12"ø STEEL PILES.	BASE BID
3	REMOVE AND SALVAGE TWO PILE HOOPS, TRANSITION RAMP, HARDWARE AND OTHER MISCELLANEOUS APPURTENANCES AS REQ'D. TO ALLOW THE OWNER TO TEMPORARILY RELOCATE SEAPLANE FLOAT DURING DREDGING; OWNER SHALL TRANSPORT FLOAT BACK TO SITE UPON COMPLETION OF DREDGING, COORDINATE AS REQ'D. REINSTALL FLOAT AND ALL APPURTENANCES UPON COMPLETION OF DREDGE WORK.	BASE BID
4	DEMOLISH AND DISPOSE EXISTING OUTFALL PIPE; CONNECTION POINT TO DREDGING LIMITS, (APPROX. 530 LF); DEMOLISH AND DISPOSE SECTION AS REQ'D. TO FULLY INSTALL WAVE BARRIER; ABANDON REMAINDER AND DIFFUSER IN PLACE, SEE WASTEWATER PLAN	BASE BID
5	DEMOLISH AND DISPOSE ALL TIMBER PILES & TIMBER RETAINING WALL WITHIN DREDGE LIMIT.	ADD ALT. A
6	REMOVE AND DISPOSE TREES, CLEAR AND GRUB ALL ORGANIC COVER.	BASE BID
7	REMOVE AND DISPOSE MISCELLANEOUS TIMBER, LOGS, CONCRETE, STEEL AND OTHER DEBRIS WITHIN CLEARING LIMIT SHOWN.	BASE BID
8	REMOVE BOULDERS WITHIN DREDGE AREAS AS REQUIRED. BOULDERS MAY BE RELOCATED TO WITHIN THE UPLAND FILL PRISM OR UTILIZED AS EMBANKMENT ARMOR ROCK IF WITHIN APPROPRIATE GRADATION LIMITS.	BASE BID
9	OWNER SHALL RELOCATE EXISTING ARTWORK/ DISPLAY (1 EA) TO NEARBY LOCATION; DO NOT DISTURB PRIOR TO OWNER COORDINATION.	BASE BID
10	REMOVE & DISPOSE SECTION OF 6"ø DRILL CASING PROTRUDING ABOVE MUDLINE; LOCATION SHOWN IS APPROXIMATE, FIELD LOCATE AS REQUIRED.	BASE BID

HAINES BOROUGH ALASKA

REVISIONS

REV.	DATE	DESCRIPTION	DWN.	CKD.	APP.

PND ENGINEERS, INC.
9360 Glacier Highway, Ste. 100
Juneau, Alaska 99801
Phone: 907-586-2093
Fax: 907-586-2099
www.pndengineers.com

DESIGN: TCB CHECKED: CRS
DRAWN: PJD APPROVED: CRS
SCALE: AS SHOWN

STATE OF ALASKA 49TH Charles R. Somerville CE-8845 REGISTERED PROFESSIONAL ENGINEER
DATE: 8/23/16

HAINES BOROUGH
PORTAGE COVE
HARBOR EXPANSION

SHEET TITLE: DEMOLITION, SALVAGE & DISPOSAL PLAN

PND PROJECT NO.: 102029.01

1.06

SHEET 6 OF 32

OWNER FURNISHED PILE SCHEDULE

PILE #	PILE LENGTH (FT)	PILE SIZE	OWNER PROVIDED LENGTHS (FT)	ANTICIPATED CUTOFF (70')	NO. OF FIELD SPLICES REQ'D. BY CONTRACTOR	CUTTING SHOE
1	70	12¾"ø x 0.500"t	61.5 * 35	26.5' ±	1	(OF) ON 61.5' PILE
2	70	12¾"ø x 0.500"t	45 * 26.5 (CUTOFF FROM 1)	1.5' ±	1	(OF) ON 45' PILE
3	70	12¾"ø x 0.500"t	57 * 29	16' ±	1	(OF) ON 63' PILE
4	70	12¾"ø x 0.500"t	59 * 16 (CUTOFF FROM 3)	5' ±	1	(OF) ON 59' PILE
5	70	12¾"ø x 0.500"t	43.5 * 30	3.5' ±	1	(OF) ON 43.5' PILE
6	70	12¾"ø x 0.500"t	34.5 * 35.5	0	1	(OF) ON 34.8' PILE
7	70	12¾"ø x 0.500"t	29 * 41	0	1	(OF) ON 29' PILE
8	70	12¾"ø x 0.500"t	28 * 43.5	1.5 ±		(OF) ON 43.5' PILE
9	70	12¾"ø x 0.500"t	34 36	0		(CF) FIELD INSTALL

NOTE:
(OF) = OWNER FURNISHED AND CURRENTLY INSTALLED ON PILE INDICATED BY *
(CF) = CONTRACTOR FURNISHED

CONTRACTOR FURNISHED PILE SCHEDULE

PILE #	PILE LENGTH (FT)	PILE SIZE
10 11 12 13 14 15 16 17	80	16"ø x 0.500"t

NOTES:

1. ANTICIPATED LENGTHS & CUTOFF LENGTHS ESTIMATED FOR REFERENCE ONLY, PILES SHALL MEET MIN. EMBEDMENT REQUIREMENTS.
2. 12¾"ø PILES AND ASSOCIATED WORK AT THE TRANSIENT FLOAT SHALL BE PERFORMED UNDER **BASE BID** AND SHALL BE COMPLETED PRIOR TO **ADDITIVE ALTERNATE A** DREDGING.
   CONTRACTOR OPTION (INCIDENTAL): TEMPORARILY RELOCATE TRANSIENT FLOAT PRIOR TO ADD ALT A DREDGING AND INSTALL FLOAT AND PILES UPON COMPLETION OF DREDGING. CONTRACTOR SHALL:
   A. SURVEY LOCATIONS OF FLOATS & PILES PRIOR TO REMOVAL.
   B. TEMPORARILY STOW GANGWAY, COORDINATE WITH OWNER.
   C. COORDINATE WITH OWNER TO DISCONNECT & STOW ELECTRICAL & SEWER WORKS.
   D. DRIVE A TEMPORARY PILE TO SECURE THE EAST END OF THE FUEL FLOAT.
3. OWNER SHALL SUPPLY PIECES OF 12¾"ø HDG STEEL PIPE FOR PILES IN LENGTHS ADEQUATE TO CONSTRUCT (9) 70' STEEL PILES, CONTRACTOR SHALL FIELD SPLICE PILES & INSTALL CUTTING SHOES AS REQ'D; OWNER-FURNISHED PILE MATERIALS SHALL BE DELIVERED TO SITE UPLANDS STAGING AREA BY OWNER, COORDINATE AS REQ'D.
4. REPAIR DAMAGE TO TOP OF PILES CAUSED BY DRIVING PRIOR TO INSTALLATION OF CAPS
5. PROVIDE OWNER & ENGINEER A MINIMUM OF 7 DAYS NOTICE PRIOR TO PERFORMING ANY TRANSIENT FLOAT WORK OR REQUIRING DISCONNECT OF EXISTING FACILITIES.
6. PRIOR TO ORDERING PILE MATERIALS THE CONTRACTOR SHALL INSPECT OWNER FURNISHED MATERIALS & NOTIFY THE ENGINEER OF ANY CONCERNS WITH THE SUITABILITY OF THEIR USE.

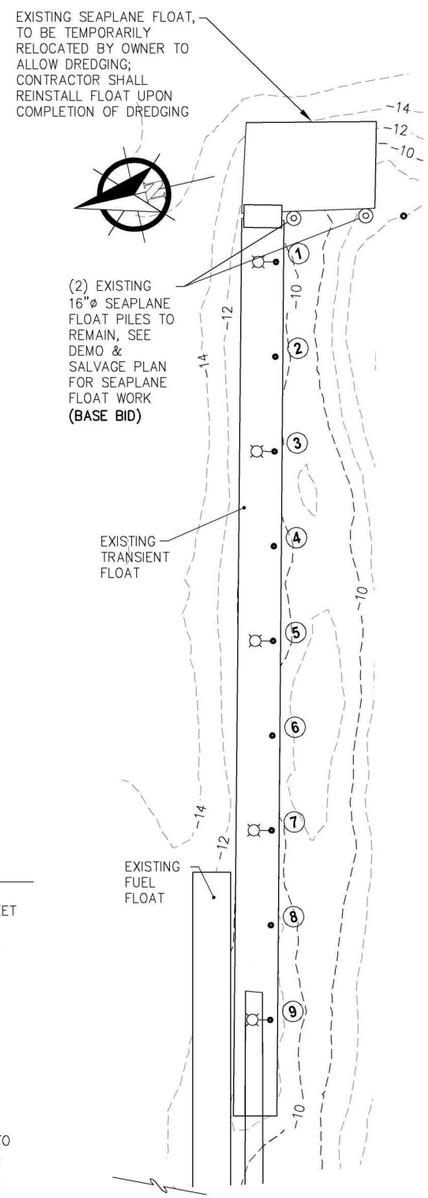

TRANSIENT FLOAT PILE LAYOUT

SCALE IN FEET
0 20 40 FT.

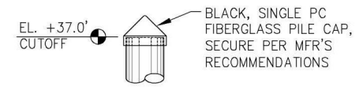

TOP OF 16"Ø PILES

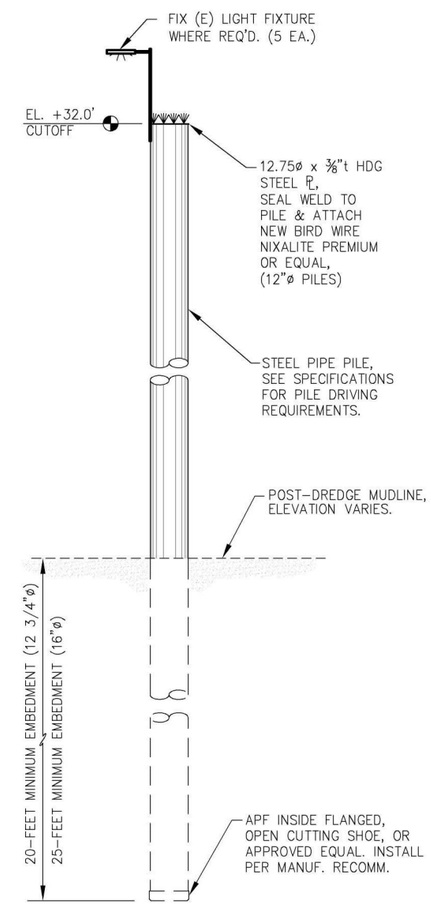

TYPICAL STEEL FLOAT MOORING PILE

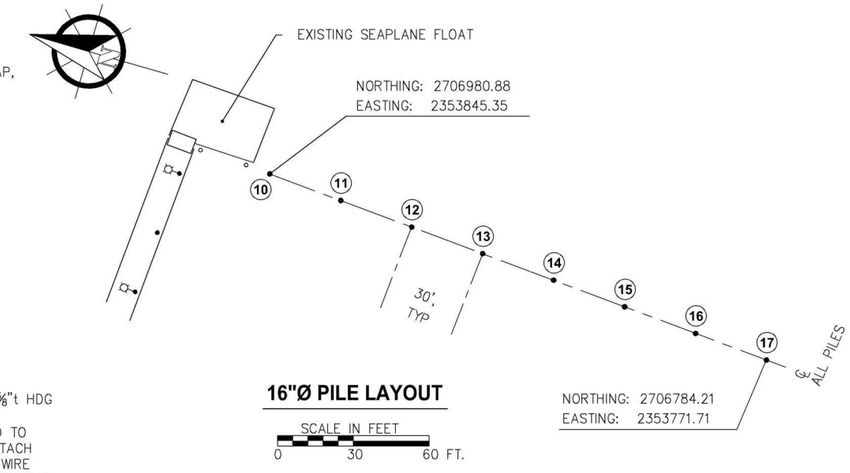

16"Ø PILE LAYOUT

SCALE IN FEET
0 30 60 FT.

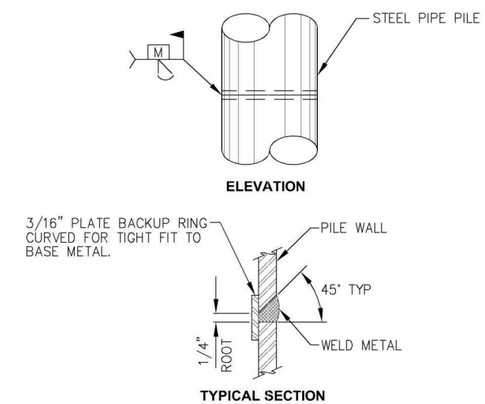

TYPICAL PILE SPLICE WELD
(TYPICAL FOR ALL PIPE PILE SPLICES)

REVISIONS

REV.	DATE	DESCRIPTION	DWN.	CKD.	APP.

PND ENGINEERS, INC.
9360 Glacier Highway, Ste. 100
Juneau, Alaska 99801
Phone: 907-586-2093
Fax: 907-586-2099
www.pndengineers.com

DESIGN: TCB CHECKED: CRS
DRAWN: PJD APPROVED: CRS
SCALE: AS SHOWN

STATE OF ALASKA 49TH Charles R. Somerville CE-8845 REGISTERED PROFESSIONAL ENGINEER
DATE: 8/23/16

HAINES BOROUGH
PORTAGE COVE
HARBOR EXPANSION

SHEET TITLE: TRANSIENT FLOAT PLAN - PILE LAYOUT AND DETAILS

1.07

PND PROJECT NO.: 102029.01

SHEET 7 OF 32

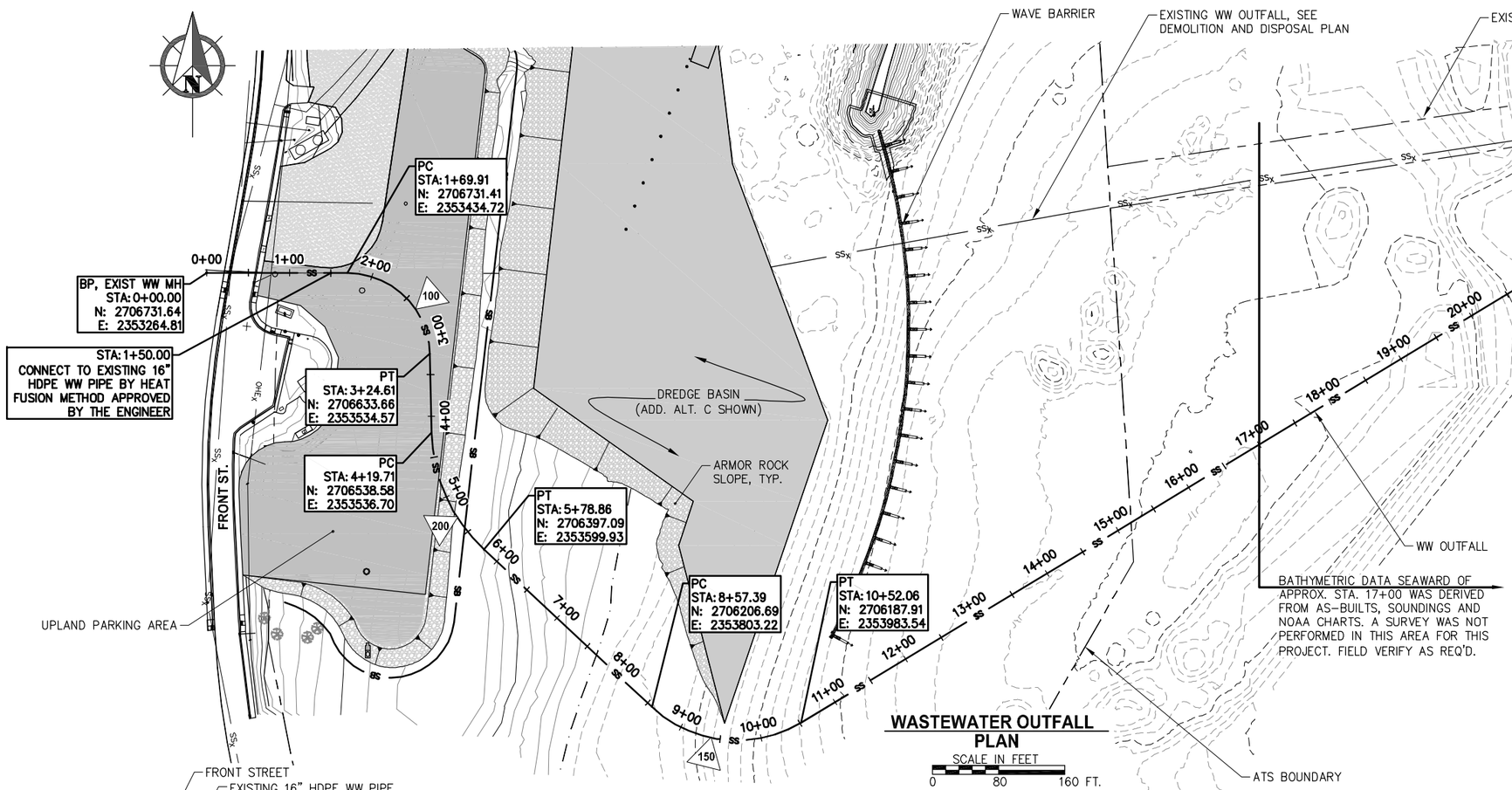

WASTEWATER OUTFALL PLAN

SCALE IN FEET
0 80 160 FT.

NOTE:

1. UPSTREAM CONNECTION POINT IS SHOWN APPROXIMATE, FIELD VERIFY EXISTING OUTFALL LOCATION.
2. NEW SECTION OF HDPE WW OUTFALL SHALL BE CONSTRUCTED, FLUSHED AND TESTED IN ITS ENTIRETY PRIOR TO MAKING FINAL CONNECTION TO EXISTING PIPE.
3. THE CONTRACTOR SHALL COORDINATE WITH THE HAINES BOROUGH WASTEWATER DEPARTMENT TO HAVE WASTEWATER FLOWS DIVERTED TO AN OWNER MAINTAINED HOLDING TANK TO FACILITATE FINAL CONNECTION TO THE EXISTING OUTFALL PIPE. WORK SHALL BE PERFORMED AT A LOW FLOW PERIOD AS DIRECTED BY THE WASTEWATER DEPARTMENT. WORK SHALL BE PERFORMED WITH TIDAL ELEVATIONS OF +2 MLLW OR LOWER. THE CONTRACTOR SHALL PERFORM THE WORK IN SUCH A MANNER THAT SYSTEM DOWN TIME IS LIMITED TO THE GREATEST EXTENT PRACTICABLE AND TO 3 HOURS MAXIMUM. SUBMIT SCHEDULE AND WORK PLAN FOR MAKING THE CONNECTION CONCURRENTLY WITH THE OUTFALL INSTALLATION PLAN AS DESCRIBED IN SECTION 02401–WASTEWATER OUTFALL TO THE ENGINEER FOR APPROVAL A MINIMUM OF 30 DAYS PRIOR TO PERFORMING THE WORK.
4. DIFFUSER LOCATION IS APPROXIMATE, LOCATE DIFFUSER SUCH THAT WASTEWATER DISCHARGE LOCATION IS SIMILAR TO THE EXISTING OUTFALL.
5. INSTALL TYPE I ANCHORS AT 11' O.C. FROM STA. 7+75 TO DAYLIGHT POINT, APPROX STA. 25+60. TYPE II ANCHORS SHALL BE INSTALLED @ 4' O.C. DOWNSTREAM OF THE DAYLIGHT POINT. CONTRACTOR MAY INSTALL ANCHORS UPSTREAM OF 7+75 TO FACILITATE THE WORK AT HIS OWN EXPENSE.
6. TYPE II ANCHORS SHALL BE INSTALLED ON THE DIFFUSER, SEE DIFFUSER DETAILS.

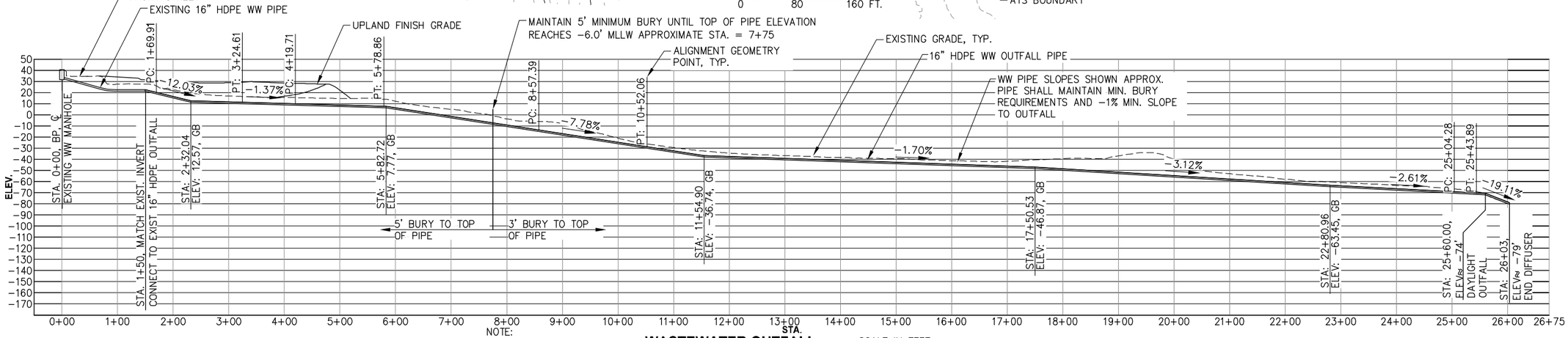

NOTE:
PROFILE SHOWN WITH 2X VERTICAL EXAGGERATION

WASTEWATER OUTFALL PROFILE

SCALE IN FEET
0 100 200 FT.

REVISIONS

REV.	DATE	DESCRIPTION	DWN.	CKD.	APP.

P N D ENGINEERS, INC.
9360 Glacier Highway, Ste. 100
Juneau, Alaska 99801
Phone: 907-586-2093
Fax: 907-586-2099
www.pndengineers.com

DESIGN: TCB CHECKED: CRS
DRAWN: TCB APPROVED: CRS
SCALE: AS SHOWN

STATE OF ALASKA 49TH Charles R. Somerville CE-8845 REGISTERED PROFESSIONAL ENGINEER
DATE: 8/23/16

HAINES BOROUGH PORTAGE COVE HARBOR EXPANSION

SHEET TITLE: **WASTEWATER OUTFALL PLAN & PROFILE**

PND PROJECT NO.: 102029.01

2.01

SHEET 8 OF 32

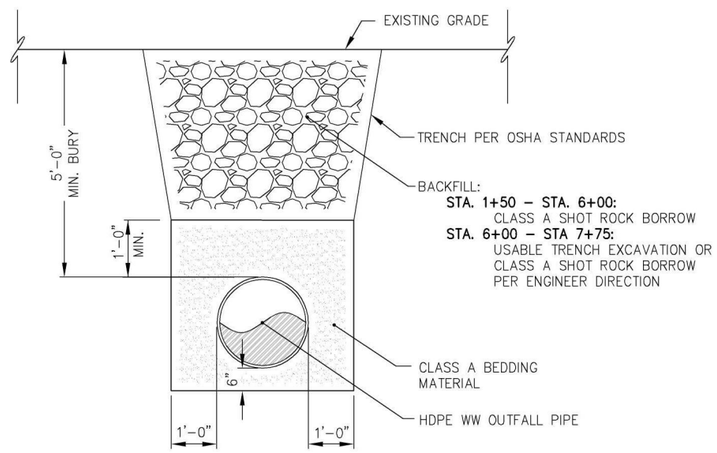

OUTFALL PIPE TRENCH STA. 1+50 TO STA. 7+75
SECTION

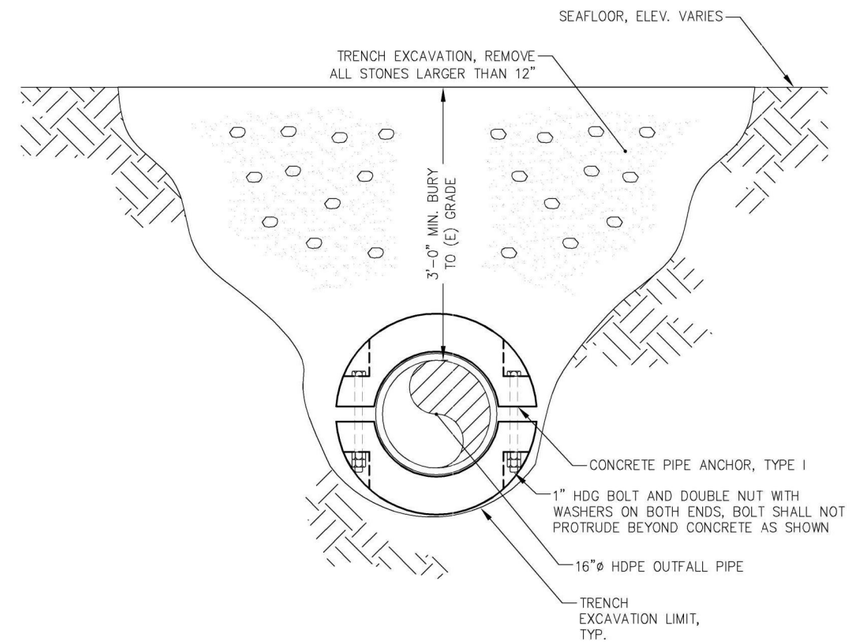

OUTFALL PIPE TRENCH STA. 7+75 TO DAYLIGHT
SECTION

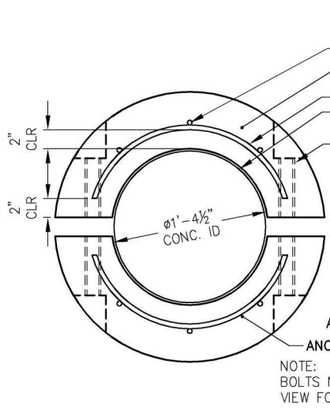

CONCRETE PIPE ANCHOR
TYPE I

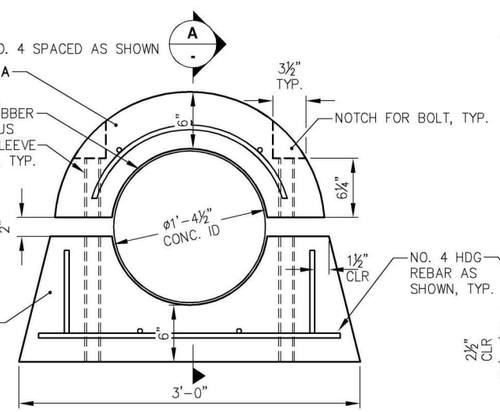

CONCRETE PIPE ANCHOR
TYPE II

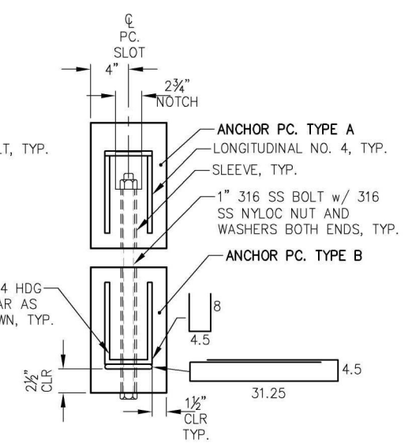

A - **CONCRETE PIPE ANCHOR**
TYPE II

NOTES:

1. BOLTS, NUTS & WASHERS FOR TYPE II PIPE ANCHOR SHALL BE FULLY PASSIVATED 316 SS.
2. DOUBLE NUTS MAY BE SUBSTITUTED FOR NYLOC NUTS PROVIDED ALL THREADS ARE ENGAGED & BOLT DOES NOT PROTRUDE BEYOND CONCRETE.

REVISIONS

REV.	DATE	DESCRIPTION	DWN.	CKD.	APP.

P N D ENGINEERS, INC.
9360 Glacier Highway, Ste. 100
Juneau, Alaska 99801
Phone: 907-586-2093
Fax: 907-586-2099
www.pndengineers.com

DESIGN: TCB CHECKED: CRS
DRAWN: TCB APPROVED: CRS
SCALE: NTS

STATE OF ALASKA 49TH Charles R. Somerville CE-8845 REGISTERED PROFESSIONAL ENGINEER
DATE: 8/23/16

HAINES BOROUGH
PORTAGE COVE
HARBOR EXPANSION

SHEET TITLE: WASTEWATER OUTFALL DETAILS

2.02

SHEET 9 OF 32

PND PROJECT NO.: 102029.01

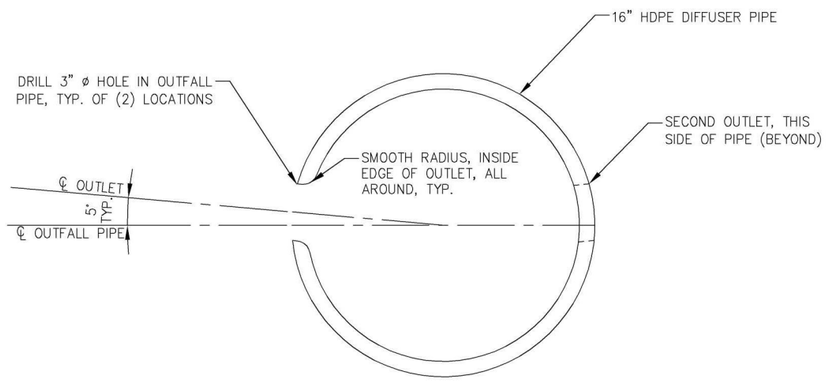

A / - DIFFUSER OUTLET TYPICAL SECTION

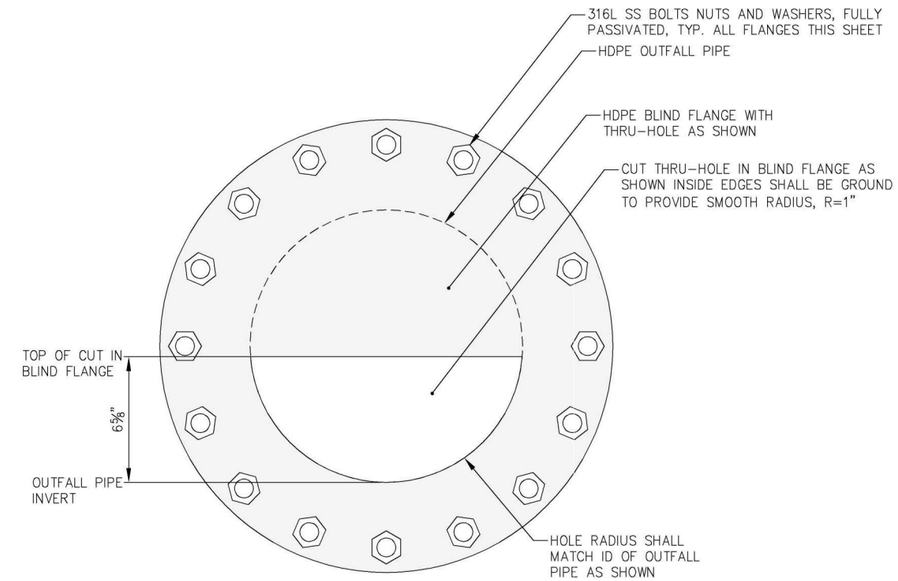

B / - DIFFUSER END ELEVATION

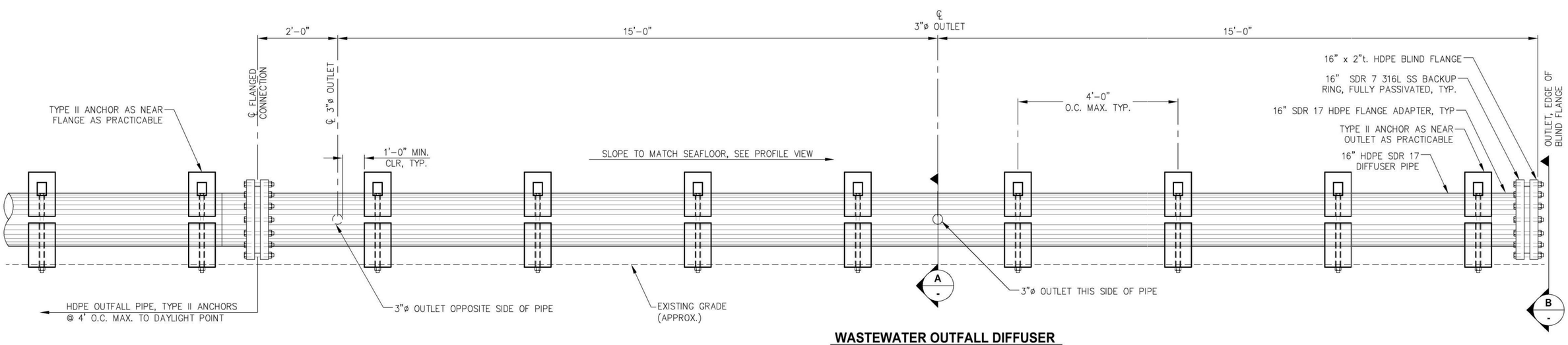

WASTEWATER OUTFALL DIFFUSER ELEVATION

REVISIONS

REV.	DATE	DESCRIPTION	DWN.	CKD.	APP.

P N D ENGINEERS, INC.
9360 Glacier Highway, Ste. 100
Juneau, Alaska 99801
Phone: 907-586-2093
Fax: 907-586-2099
www.pndengineers.com

DESIGN: TCB CHECKED: CRS
DRAWN: TCB APPROVED: CRS
SCALE: NTS

STATE OF ALASKA 49TH Charles R. Somerville CE-8845 REGISTERED PROFESSIONAL ENGINEER
DATE: 8/23/16

HAINES BOROUGH PORTAGE COVE HARBOR EXPANSION

SHEET TITLE: WASTEWATER OUTFALL DIFFUSER DETAILS

PND PROJECT NO.: 102029.01

2.03

SHEET 10 OF 32

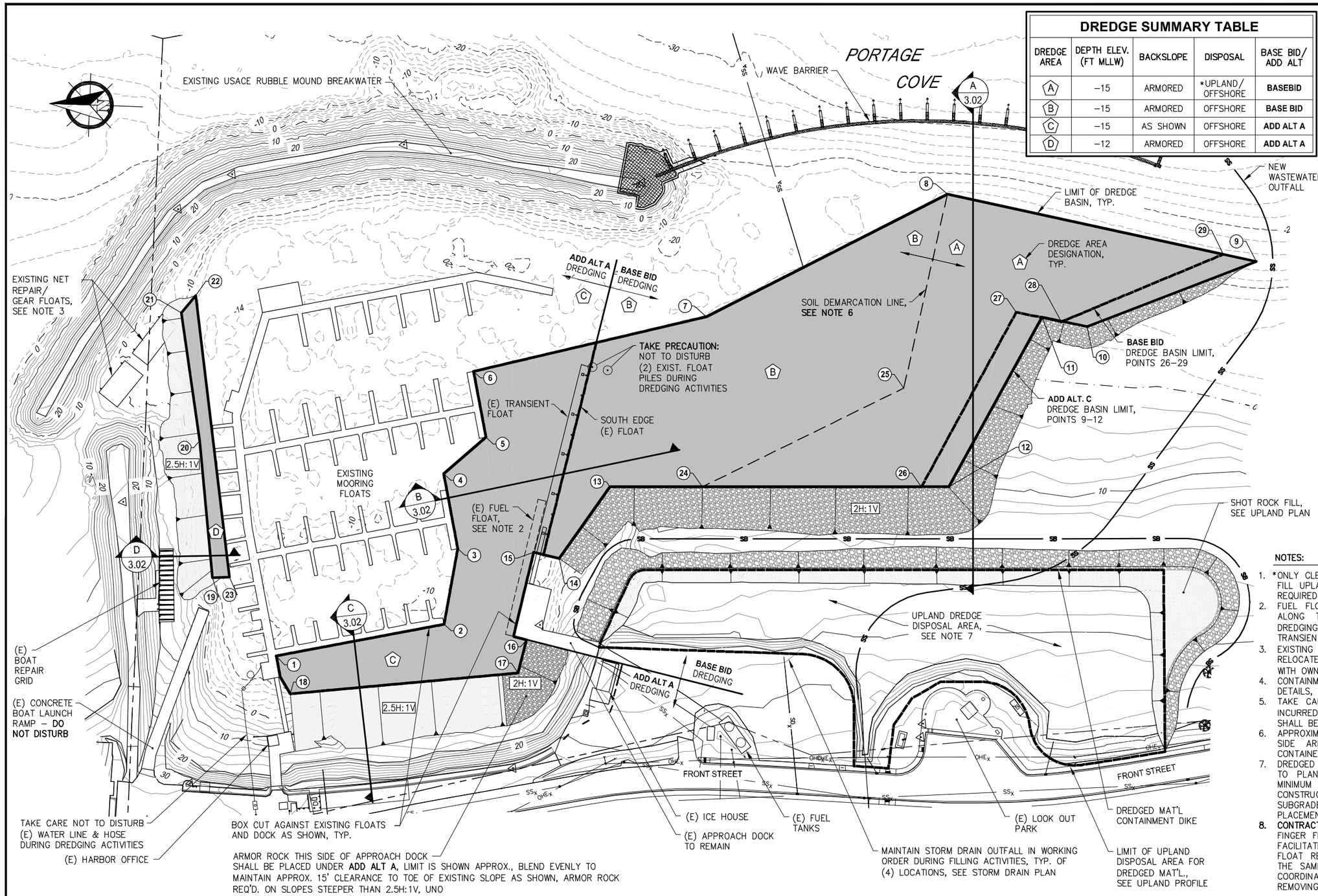

DREDGE SUMMARY TABLE

DREDGE AREA	DEPTH ELEV. (FT MLLW)	BACKSLOPE	DISPOSAL	BASE BID/ ADD ALT
A	–15	ARMORED	*UPLAND/ OFFSHORE	BASEBID
B	–15	ARMORED	OFFSHORE	BASE BID
C	–15	AS SHOWN	OFFSHORE	ADD ALT A
D	–12	ARMORED	OFFSHORE	ADD ALT A

DREDGE LAYOUT TABLE

POINT #	NORTHING	EASTING
1	2707432.156	2353548.002
2	2707224.058	2353562.987
3	2707197.021	2353652.937
4	2707203.643	2353745.856
5	2707147.145	2353784.293
6	2707153.113	2353866.043
7	706863.008	2353900.156
8	2706553.166	2354015.445
9	2706187.367	2353890.878
10	2706401.781	2353835.141
11	2706455.285	2353853.066
12	2706591.963	2353659.685
13	2707003.661	2353706.936
14	2707075.108	2353626.825
15	2707105.298	2353637.955
16	2707126.058	2353532.786
17	2707141.088	2353493.607
18	2707420.698	2353499.944
19	2707498.860	2353651.855
20	2707495.270	2353820.003
21	2707499.943	2353977.621
22	2707479.901	2353996.644
23	2707478.202	2353650.161
24	2706891.336	2353694.044
25	2706633.001	2353786.029
26	2706625.308	2353663.512
27	2706485.838	2353862.664
28	2706432.299	2353844.728
29	2706226.432	2353904.181

NOTES:

1. *ONLY CLEAN GRANULAR DREDGE MATERIAL SHALL BE USED TO FILL UPLAND PARKING AREA PER TYPICAL SECTION TO EXTENT REQUIRED, REMAINING MATERIAL SHALL BE DISPOSED OFFSHORE.
2. FUEL FLOAT SHALL BE TEMPORARILY MOVED LONGITUDINALLY ALONG THE TRANSIENT FLOAT BY OWNER TO FACILITATE DREDGING, COORDINATE WITH OWNER AS REQ'D. ALSO SEE TRANSIENT FLOAT PLAN CONDITIONS SHEET 1.07.
3. EXISTING NET REPAIR/ GEAR FLOATS WILL BE TEMPORARILY RELOCATED BY OWNER TO FACILITATE DREDGING, COORDINATE WITH OWNER AS REQ'D.
4. CONTAINMENT DIKE DETAILS & LAYOUT SHALL BE PER UPLANDS DETAILS, CONSTRUCT PRIOR TO DREDGING ACTIVITIES.
5. TAKE CARE NOT TO UNDERMINE EXISTING FACILITIES, DAMAGE INCURRED AS A RESULT OF THE CONTRACTOR'S OPERATIONS SHALL BE REPAIRED AT NO COST TO THE OWNER.
6. APPROXIMATE SOIL DEMARCATION BOUNDARY; SOILS TO SOUTH SIDE ARE TYPICALLY CLEANER & SUITABLE FOR UPLAND CONTAINED DISPOSAL.
7. DREDGED MATERIAL DISPOSED IN THE UPLANDS SHALL BE FILLED TO PLAN LIMIT THEN ALLOWED TO SETTLE & DEWATER A MINIMUM OF 30 DAYS PRIOR TO RESUMING UPLAND CONSTRUCTION; PLACE ADDITIONAL DREDGE SPOILS TO SUBGRADE LIMITS FOLLOWING SETTLEMENT PERIOD, PRIOR TO PLACEMENT OF GEOTEXTILE FABRIC..
8. **CONTRACTOR OPTION:** FINGER FLOATS ALONG DREDGE AREA D MAY BE REMOVED TO FACILITATE DREDGING; CONTRACTOR SHALL BE RESPONSIBLE FOR FLOAT REMOVAL, TRANSPORT, STORAGE & REINSTALLATION IN THE SAME LOCATION TO PRE–EXISTING CONDITION OR BETTER; COORDINATE WITH OWNER A MINIMUM OF 1 WEEK PRIOR TO REMOVING FLOATS.

HAINES BOROUGH ALASKA

REVISIONS

REV.	DATE	DESCRIPTION	DWN.	CKD.	APP.

PND ENGINEERS, INC.
9360 Glacier Highway, Ste. 100
Juneau, Alaska 99801
Phone: 907-586-2093
Fax: 907-586-2099
www.pndengineers.com

DESIGN: TCB CHECKED: CRS
DRAWN: PJD APPROVED: CRS
SCALE: SCALE IN FEET 0 60 120 FT.

STATE OF ALASKA 49TH Charles R. Somerville CE-8845 REGISTERED PROFESSIONAL ENGINEER
DATE: 8/23/16

HAINES BOROUGH PORTAGE COVE HARBOR EXPANSION

SHEET TITLE: **DREDGING PLAN**

PND PROJECT NO.: 102029.01

3.01

SHEET 11 OF 32

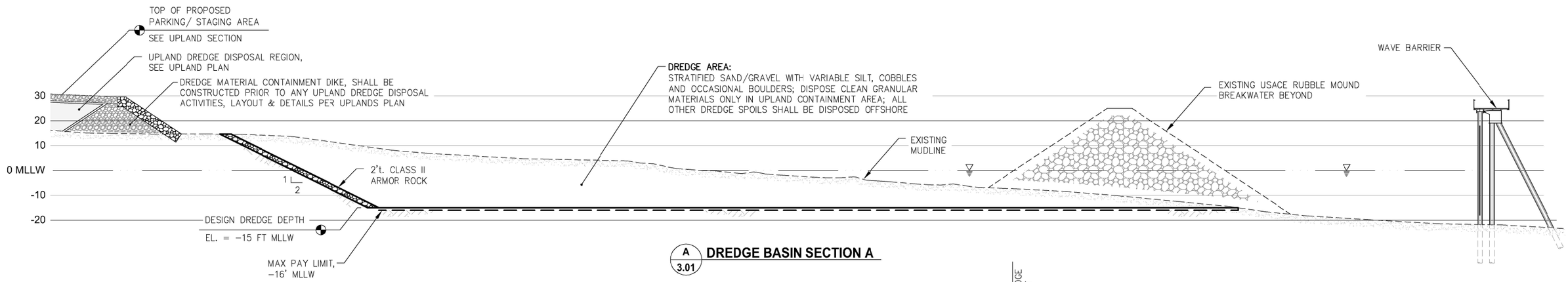

A 3.01 **DREDGE BASIN SECTION A**

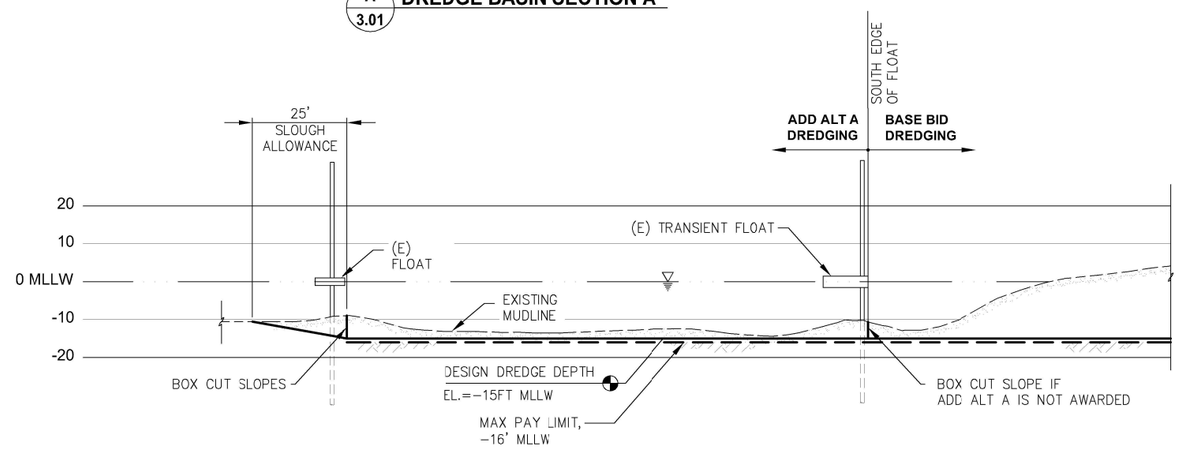

B 3.01 **DREDGE BASIN SECTION B**

NOTE:
SEE GEOTECHNICAL REPORT: (HAINES BOROUGH SOUTH PORTAGE COVE HARBOR EXPANSION GEOTECHNICAL ENGINEERING REPORT MARCH, 2015) FOR DETAILED SOIL DESCRIPTIONS WITHIN DREDGE AREAS

NOTES:
1. BID SCHEDULE VOLUMES ARE APPROXIMATE, FINAL PAY QUANTITIES SHALL BE DETERMINED BY THE PRE AND POST DREDGE SURVEYS.
2. PRE & POST DREDGE SURVEYS SHALL EXTEND 25' MIN. BEYOND DREDGE LIMITS TO DETERMINE SLOUGH.
3. SLOUGH ALLOWANCE IS TYPICAL ALL BOX CUTS.

NOTE:
DREDGE SLOPE STEEPENS NEAR FUEL DOCK, ARMOR ROCK REQ'D ON SLOPES STEEPER THAN 2.5H:1V, SEE DREDGING SITE PLAN

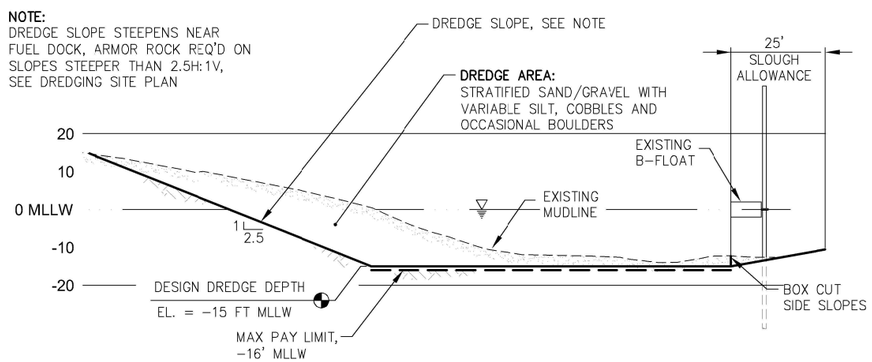

C 3.01 **DREDGE BASIN SECTION C (ADD ALT A)**

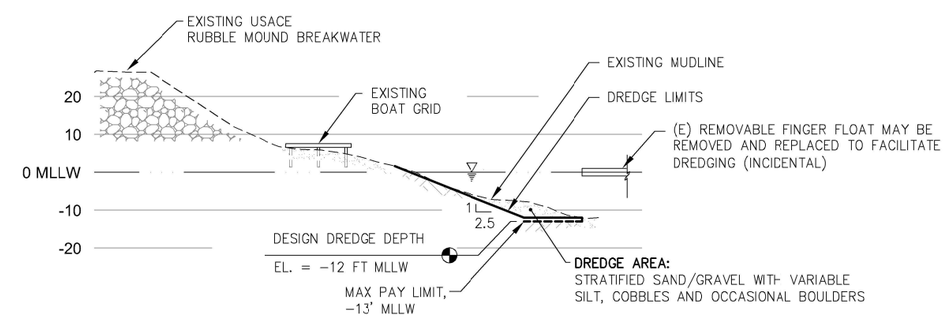

D 3.01 **DREDGE BASIN SECTION D (ADD ALT A)**

REVISIONS

REV.	DATE	DESCRIPTION	DWN.	CKD.	APP.

PND ENGINEERS, INC.
9360 Glacier Highway, Ste. 100
Juneau, Alaska 99801
Phone: 907-586-2093
Fax: 907-586-2099
www.pndengineers.com

DESIGN: TCB CHECKED: CRS
DRAWN: PJD APPROVED: CRS
SCALE: SCALE IN FEET 0 20 40 FT.

STATE OF ALASKA 49TH Charles R. Somerville CE-8845 REGISTERED PROFESSIONAL ENGINEER
DATE: 8/23/16

HAINES BOROUGH PORTAGE COVE HARBOR EXPANSION

SHEET TITLE: **DREDGING SECTIONS**

PND PROJECT NO.: 102029.01

3.02
SHEET 12 OF 32

OFFSHORE DISPOSAL SITE
(± 50 ACRES)

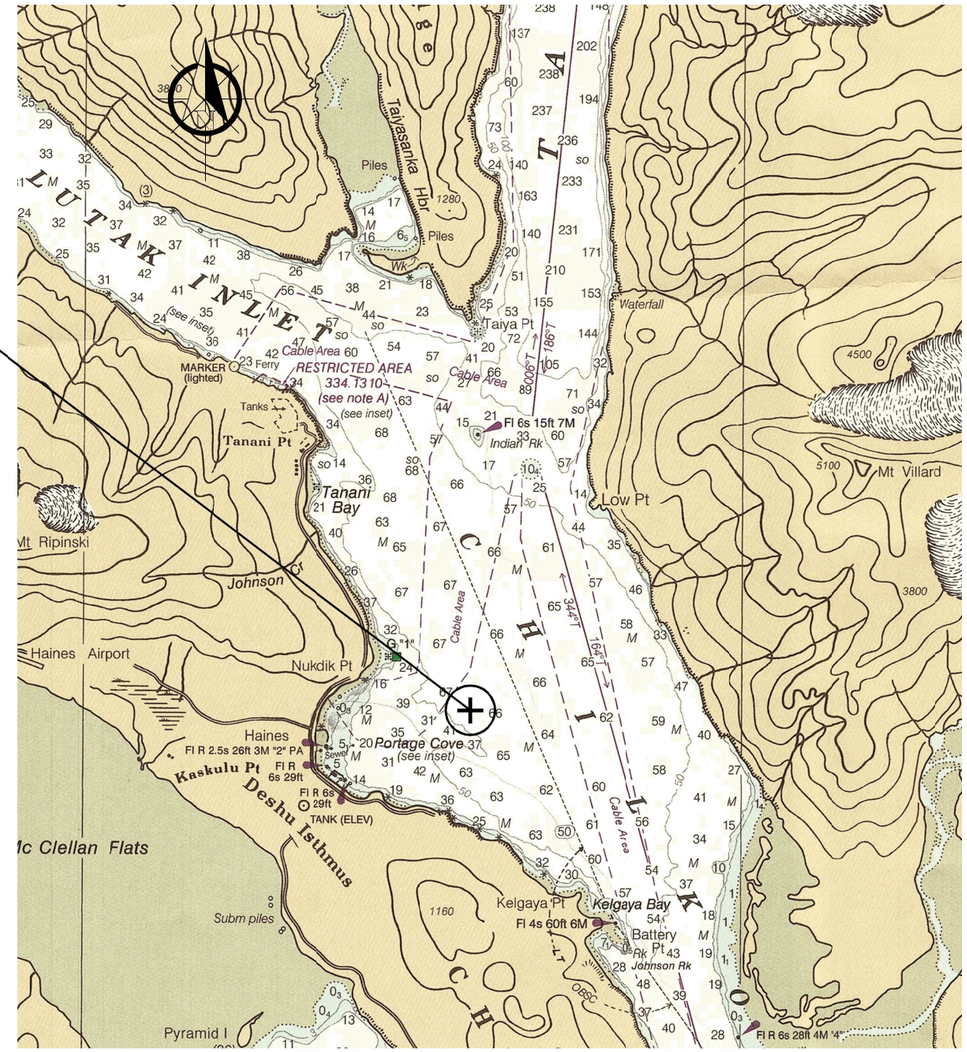

OFFSHORE DISPOSAL SITE CENTER:

LAT: N 59°14'18"

LONG: W 135°24'12"

NOTE:
CENTER LOCATION APPROXIMATE

BATHYMETRY FROM: NOAA 17317
LYNN CANAL – SHERMAN POINT TO SKAGWAY

OFFSHORE DISPOSAL PLAN

SCALE IN MILES
0 ¼ ½

REVISIONS

REV.	DATE	DESCRIPTION	DWN.	CKD.	APP.

PND ENGINEERS, INC.
9360 Glacier Highway, Ste. 100
Juneau, Alaska 99801
Phone: 907-586-2093
Fax: 907-586-2099
www.pndengineers.com

DESIGN: NJS CHECKED: CRS
DRAWN: PJD APPROVED: CRS
SCALE: AS SHOWN
DATE: 8/23/16

STATE OF ALASKA 49TH Charles R. Somerville CE-8845 REGISTERED PROFESSIONAL ENGINEER

HAINES BOROUGH
PORTAGE COVE
HARBOR EXPANSION

SHEET TITLE: DREDGING OFFSHORE DISPOSAL PLAN

PND PROJECT NO.: 102029.01

SHEET 13 OF 32

3.03

LAYOUT TABLE				
POINT NO.	NORTHING	EASTING	ELEVATION	DESCRIPTION
1	2706366.24	2353308.30	35.30	ESRB, ME
2	2706360.88	2353370.33	34.03	ESRB, PC, SUB-FILL DEMARCATION
3	2706303.85	2353450.18	32.01	ESRB, PCC, BEGIN CLASS IV ARMOR
4	2706316.26	2353526.15	29.94	ESRB, PT
5	2706342.71	2353529.18	29.12	ESRB, SUB-FILL DEMARCATION
6	2706431.30	2353539.31	26.39	ESRB, GB
7	2706469.70	2353543.70	27.35	ESRB, END CL IV ARMOR
8	2706613.74	2353560.16	29.09	ESRB, GB
9	2706733.56	2353573.86	25.71	ESRB, GB
10	2706853.37	2353587.56	28.13	ESRB, GB
11	2706973.19	2353601.26	24.81	ESRB, GB, PC
12	2706993.06	2353590.95	25.18	ESRB, PT
13	2707036.90	2353519.20	27.28	ESRB, ME@DOCK

LAYOUT TABLE				
POINT NO.	NORTHING	EASTING	ELEVATION	DESCRIPTION
14	2707038.93	2353513.56	27.11	ESRB, ME@DOCK
15	2707010.78	2353509.39	27.36	ESRB, GB
16	2706940.29	2353498.93	26.50	ESRB, GB
17	2706835.81	2353483.44	29.69	ESRB
18	2706792.72	2353477.05	31.01	ESRB, PC
19	2706737.69	2353405.25	32.67	ESRB, PT, GB
20	2706745.97	2353334.01	34.95	ESRB, ME
21	2706704.46	2353326.36	34.39	ESRB, ME
22	2706691.84	2353378.59	33.38	ESRB, ME
23	2706666.30	2353407.93	32.84	ESRB, ME
24	2706629.26	2353424.39	32.71	ESRB, GB, ME
25	2706580.27	2353418.84	30.58	ESRB, PC
26	2706533.80	2353386.91	29.58	ESRB, POC, GB, ME

LAYOUT TABLE				
POINT NO.	NORTHING	EASTING	ELEVATION	DESCRIPTION
27	2706527.03	2353358.92	30.45	ESRB, PRC, ME
28	2706469.91	2353303.69	35.41	ESRB, PT, ME
29	2707017.25	2353489.81	27.48	EC1, ME
30	2707043.30	2353501.43	26.73	EC1, ME@DOCK
31	2707035.47	2353442.81	27.75	EC1, ME
32	2707057.85	2353451.35	27.55	EC1, ME
33	2707060.07	2353437.62	27.98	EC1, ME
34	2707062.69	2353431.14	27.96	EC1, ME
35	2707068.16	2353433.09	28.03	EC1, ME
36	2707082.62	2353431.61	27.02	EC1, ME
37	2707096.94	2353411.00	29.70	EC1, ME
38	2707107.39	2353391.54	31.94	EC1, ME
39	2707101.78	2353375.47	32.84	EC1, ME

LAYOUT TABLE				
POINT NO.	NORTHING	EASTING	ELEVATION	DESCRIPTION
40	2706956.07	2353394.29	30.72	EC1, ME
41	2706937.86	2353387.15	32.26	EC1, ME
42	2706931.50	2353420.27	28.84	EC1, ME
43	2706917.49	2353428.00	28.50	EC1, GB, ME
44	2706901.73	2353428.67	28.78	EC1, ME
45	2706889.17	2353423.39	29.87	EC1, ME
46	2706864.89	2353383.38	31.20	EC1, ME
47	2706860.08	2353353.87	35.31	EC1, ME
48	2707018.87	2353397.84	29.45	ON FG
49	2707002.41	2353445.05	28.01	ON FG
50	2706974.31	2353472.86	27.61	ON FG
51	2706924.90	2353465.19	27.54	ON FG
52	2706875.49	2353457.51	29.02	ON FG

LAYOUT TABLE				
POINT NO.	NORTHING	EASTING	ELEVATION	DESCRIPTION
53	2706826.08	2353449.83	30.88	ON FG
54	2706776.68	2353442.15	31.91	ON FG
55	2706727.27	2353434.48	30.84	ON FG
56	2706678.75	2353426.94	31.94	ON FG
57	2706515.63	2353387.15	29.78	ON FG
58	2706465.72	2353384.16	31.14	ON FG
59	2706415.80	2353381.17	32.44	ON FG
60	2706365.62	2353378.17	33.73	ON FG
61	2707014.71	2353555.51	26.21	ON FG
62	2706965.08	2353549.45	25.74	ON FG
63	2706915.45	2353543.39	26.81	ON FG
64	2706865.82	2353537.34	28.27	ON FG
65	2706816.19	2353531.28	29.44	ON FG

LAYOUT TABLE				
POINT NO.	NORTHING	EASTING	ELEVATION	DESCRIPTION
66	2706766.56	2353525.22	28.46	ON FG
67	2706716.92	2353519.17	27.97	ON FG
68	2706667.29	2353513.11	29.15	ON FG
69	2706617.66	2353507.05	30.47	ON FG
70	2706568.03	2353500.99	29.04	ON FG
71	2706518.40	2353494.94	28.44	ON FG
72	2706468.76	2353488.88	27.53	ON FG
73	2706419.13	2353482.82	28.74	ON FG
74	2706369.50	2353476.76	30.09	ON FG
75	2706319.87	2353470.71	31.52	ON FG

LAYOUT TABLE NOTE:

1. TABLE ELEVATIONS AT MATCH POINTS ARE SHOWN FOR REFERENCE ONLY, MATCHING EXISTING SURFACES SHALL TAKE PRECEDENCE, NOTIFY ENGINEER PRIOR TO WORK OF ANY SUBSTANTIAL DISCREPANCIES, (INCIDENTAL).

ABBREVIATIONS:

ESRB: EDGE OF CLASS A SRB
EC1: EDGE OF C-1
FG: FINISH GRADE
GB: GRADE BREAK
ME: MATCH EXISTING
PC: POINT OF CUVATURE
PCC: POINT OF COMPOUND CURVATURE
POC: POINT ON CURVE
PRC: POINT OF REVERSE CURVATURE

STORM DRAIN STRUCTURES				
STRUCTURE	NORTHING	EASTING	RIM ELEV.	TYPE
S1	2706729.88	2353347.47	33.98	6' DIA. TYPE I MH W/ SOLID COVER
S2	2706815.29	2353505.45	29.57	4' DIA. TYPE II MH W/ SOLID COVER
S3	2706710.21	2353452.69	29.97	6' DIA. TYPE I MH W/ SOLID COVER
S4	2706456.14	2353456.70	28.26	6' DIA. TYPE I MH W/ SOLID COVER
S5	2706370.49	2353458.06	30.35	OIL WATER SEPARATOR
S6	2706267.85	2353459.68	22.78	OUTFALL STRUCTURE

STORM DRAIN PIPE						
PIPE	TYPE	LENGTH	FROM	INVERT	TO	INVERT
P1	24" CPEP-S	10.00'	CTE	27.17	S1	26.90
P2	12" CPEP-S	10.00'	CTE	29.20	S1	29.00
P3	24" CPEP-S	107.05'	S1	26.80	S3	24.66
P4	12" CPEP-S	40.00'	CTE	25.40	S2	25.00
P5	24" CPEP-S	117.58'	S2	24.95	S3	23.80
P6	36" CPEP-S	254.11'	S3	23.75	S4	21.20
P7	12" CPEP-S	128.55'	CTE	FIND	S4	22.00
P8	36" CPEP-S	85.66'	S4	21.15	S5	20.30
P9	36" CPEP-S	102.66'	S5	20.25	S6	19.40

NOTES:

1. SHOULD FIELD CONDITIONS WARRANT, STORM DRAIN STRUCTURE STRUCTURE S1 SHALL BE LOCATED TO PREVENT CONFLICT WITH EXISTING WASTEWATER OUTFALL PIPE, CONNECTED PIPES SHALL BE FIELD ADJUSTED AS REQUIRED, (INCIDENTAL).
2. INVERT ELEVATIONS PROVIDED AT CONNECTIONS TO EXISTING ARE APPROXIMATE, FIELD LOCATE.
3. STORM DRAIN STRUCTURE RIM ELEVATIONS ARE 6" BELOW FINISH GRADE
4. STORM DRAIN OUTFALL ELEVATION REFERENCES THE INVERT ELEVATION OF THE DISCHARGE PIPE AT OUTLET.
5. STORM DRAIN OUTFALL HORIZONTAL LOCATION APPROX. LOCATE ALONG PIPE BEARING SHOWN, FACED IN SLOPE PER OUTFALL DETAIL, SHEET 4.03.

HAINES BOROUGH ALASKA

REVISIONS

REV.	DATE	DESCRIPTION	DWN.	CKD.	APP.

PND ENGINEERS, INC.
9360 Glacier Highway, Ste. 100
Juneau, Alaska 99801
Phone: 907-586-2093
Fax: 907-586-2099
www.pndengineers.com

STATE OF ALASKA 49TH Charles R. Somerville CE-8845 REGISTERED PROFESSIONAL ENGINEER
DATE: 8/23/16

DESIGN: TCB CHECKED: CRS
DRAWN: TCB APPROVED: CRS
SCALE:

HAINES BOROUGH
PORTAGE COVE
HARBOR EXPANSION

SHEET TITLE: LAYOUT TABLES

PND PROJECT NO.: 102029.01

4.01

SHEET 14 OF 32

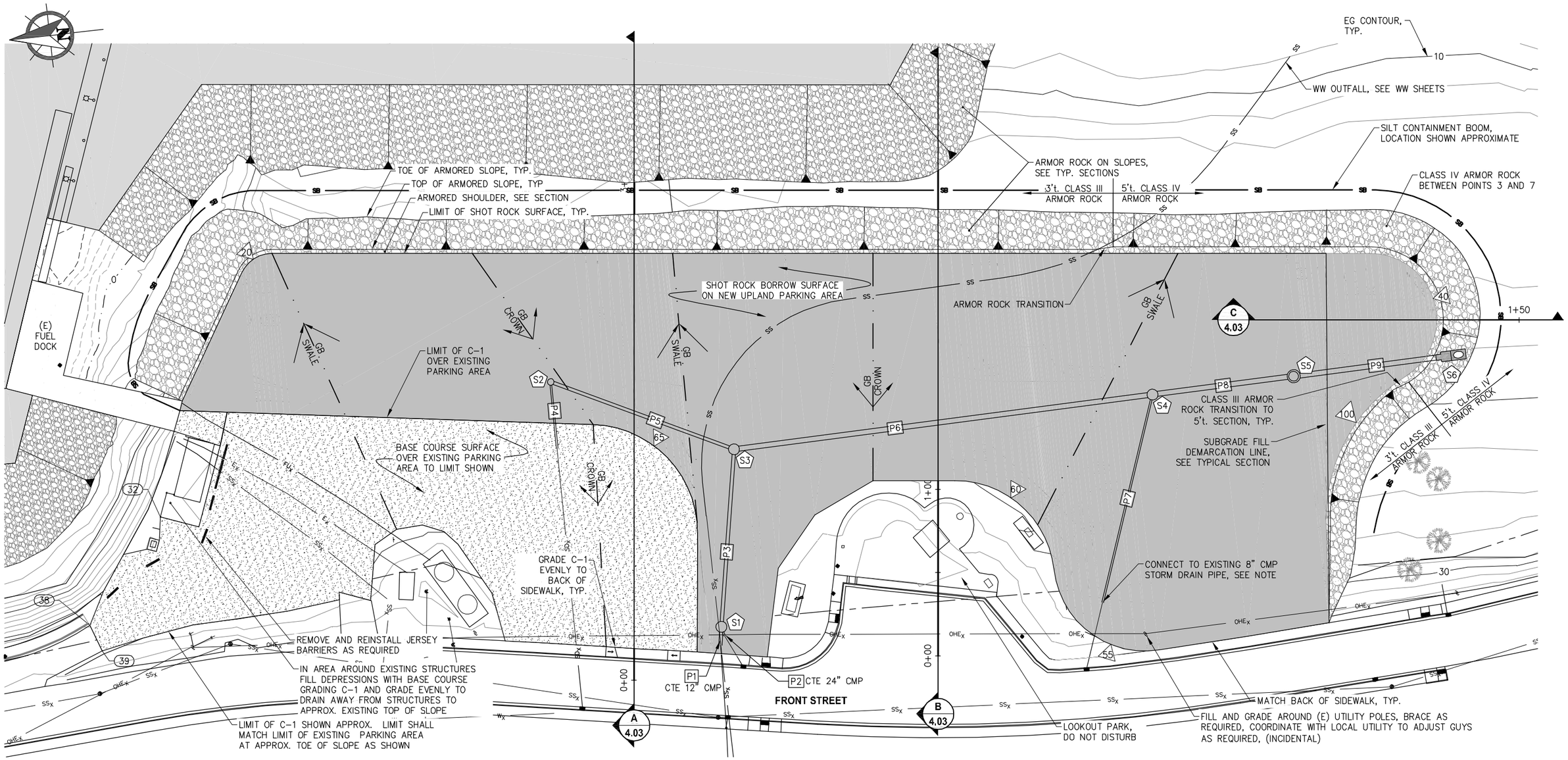

GRADING AND DRAINAGE PLAN

NOTES:

1. CONNECTIONS TO EXISTING PIPES SHALL BE COUPLED AS SHOWN IN THE CONCRETE ENCASEMENT DETAIL, SHEET 4.03.
2. THE 8" CMP PIPE TO BE CONNECTED UPSTREAM TO PIPE P7 IS BURIED IN THE EXISTING SLOPE. CONTRACTOR SHALL FIELD LOCATE AND SUBMIT COORDINATES AND INVERT ELEVATION TO ENGINEER PRIOR TO MATERIAL ORDER. (INCIDENTAL)
3. GRADE ARROWS PROVIDED ARE SPOT GRADES AND ARE FOR REFERENCE ONLY, POINTS SHALL CONTROL.
4. WATER OR WASTEWATER PIPES, INCLUDING THE 16" WASTEWATER OUTFALL SHALL BE INSULATED WITH BOARD INSULATION PER SPECIFICATIONS AT ALL LOCATIONS WHERE THE DISTANCE BETWEEN THE WW PIPE AND A STORM DRAIN PIPE OR STRUCTURE IS LESS THAN 3' PER ENGINEER DIRECTION.
5. CONSTRUCT STORM DRAIN SYSTEM IN A MANNER THAT DIRECTS FLOWS OUTSIDE OF THE DREDGED MATERIAL CONTAINMENT DIKE TO PREVENT SATURATION OF FILL MATERIALS.
6. SILT BOOM REQUIRED AROUND UPLAND FILL AREAS AS REQUIRED TO CONTAIN RUNOFF, LOCATION SHOWN APPROXIMATE, SEE SPECIFICATIONS.

HAINES BOROUGH ALASKA

REVISIONS

REV.	DATE	DESCRIPTION	DWN.	CKD.	APP.

PND ENGINEERS, INC.
9360 Glacier Highway, Ste. 100
Juneau, Alaska 99801
Phone: 907-586-2093
Fax: 907-586-2099
www.pndengineers.com

DESIGN: TCB CHECKED: CRS
DRAWN: TCB APPROVED: CRS
SCALE: SCALE IN FEET 0 30 60 FT.

STATE OF ALASKA 49TH Charles R. Somerville CE-8845 REGISTERED PROFESSIONAL ENGINEER
DATE: 8/23/16

HAINES BOROUGH PORTAGE COVE HARBOR EXPANSION

SHEET TITLE: **UPLAND GRADING AND DRAINAGE PLAN**

PND PROJECT NO.: 102029.01

SHEET 4.02 15 OF 32

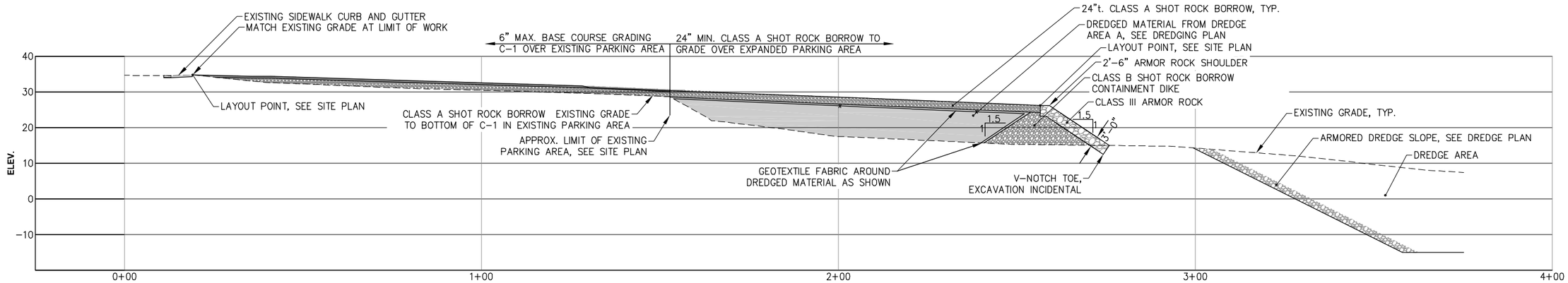

A 4.02 UPLAND FILL SECTION

SCALE IN FEET
0 15 30 FT.

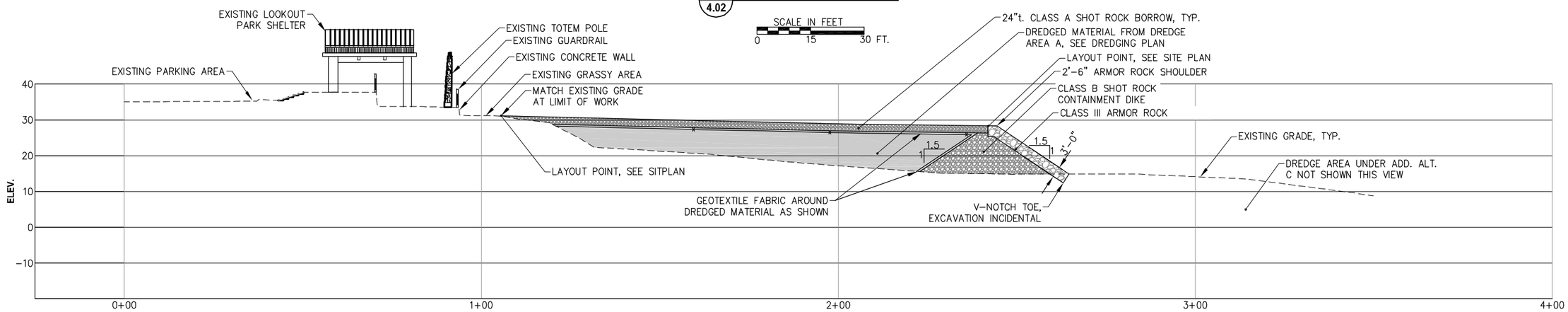

B 4.02 UPLAND FILL SECTION

SCALE IN FEET
0 15 30 FT.

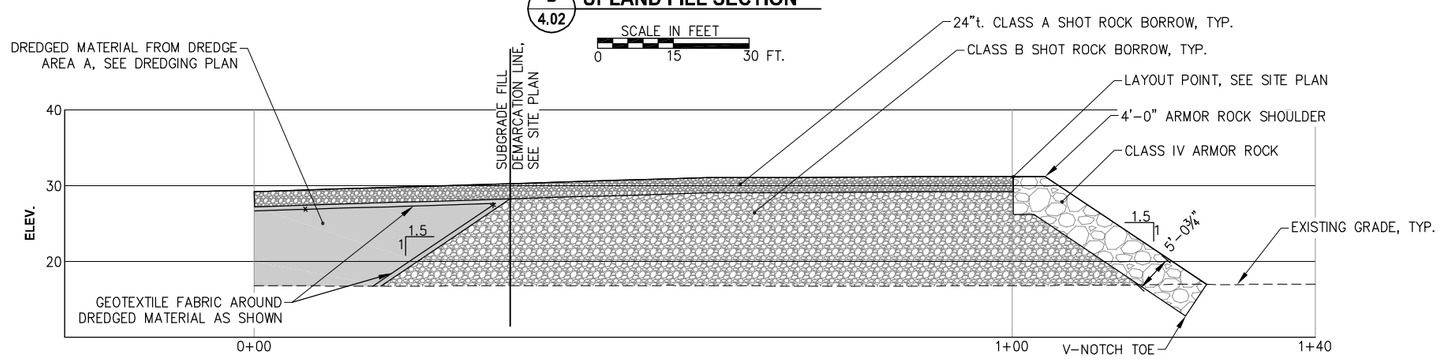

C 4.02 UPLAND FILL SECTION

SCALE IN FEET
0 10 20 FT.

NOTE:
APPROXIMATELY 23,000 CY NEAT LINE FILL VOLUME OF DREDGE MATERIAL IS ESTIMATED TO BE PLACED WITHIN THE UPLAND CONTAINMENT AREA; CONTRACTOR SHALL VERIFY QUANTITY PRIOR TO BID

HAINES BOROUGH ALASKA

REVISIONS

REV.	DATE	DESCRIPTION	DWN.	CKD.	APP.

PND ENGINEERS, INC.
9360 Glacier Highway, Ste. 100
Juneau, Alaska 99801
Phone: 907-586-2093
Fax: 907-586-2099
www.pndengineers.com

DESIGN: TCB CHECKED: CRS
DRAWN: TCB APPROVED: CRS
SCALE: AS SHOWN

STATE OF ALASKA 49TH Charles R. Somerville CE-8845 REGISTERED PROFESSIONAL ENGINEER
DATE: 8/23/16

HAINES BOROUGH
PORTAGE COVE
HARBOR EXPANSION

SHEET TITLE: **UPLAND SECTIONS**

PND PROJECT NO.: 102029.01

4.03
SHEET 16 OF 32

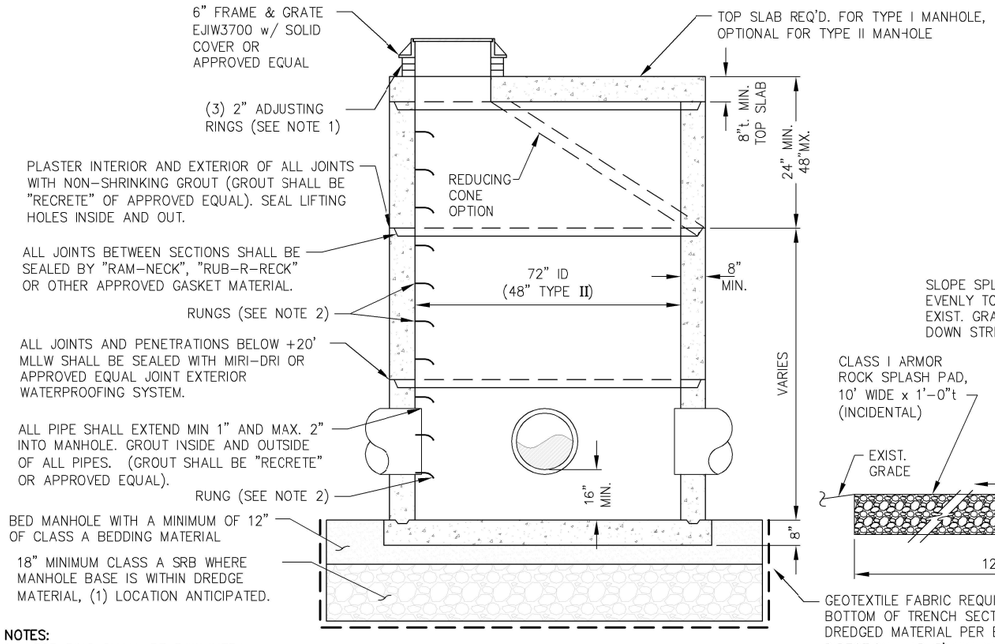

STORM DRAIN MANHOLE - TYPE I (AS SHOWN)

NOTES:

1. TOP RING SHALL BE EJIW INFRA RISER OR APPROVED EQUAL.
2. RUNGS TO BE PLACED 12" O.C. ON OBSTRUCTED SIDE OF MANHOLE. LAST RUNG SHALL BE 18" MAXIMUM FROM BOTTOM OF MANHOLE, AND TOP RUNG SHALL BE 6" MAXIMUM FROM TOP OF CONE. IF UNOBSTRUCTED SIDE NOT AVAILABLE, LAST RUNG SHALL BE PLACED 6" OVER SMALLEST PIPE. REFER TO ASTM C-478.
3. BLOCKOUTS MUST BE FORMED.
4. COVER SHALL BE STENCILED "DRAIN".
5. TYPE I MANHOLES SHALL HAVE INTEGRAL BASE.

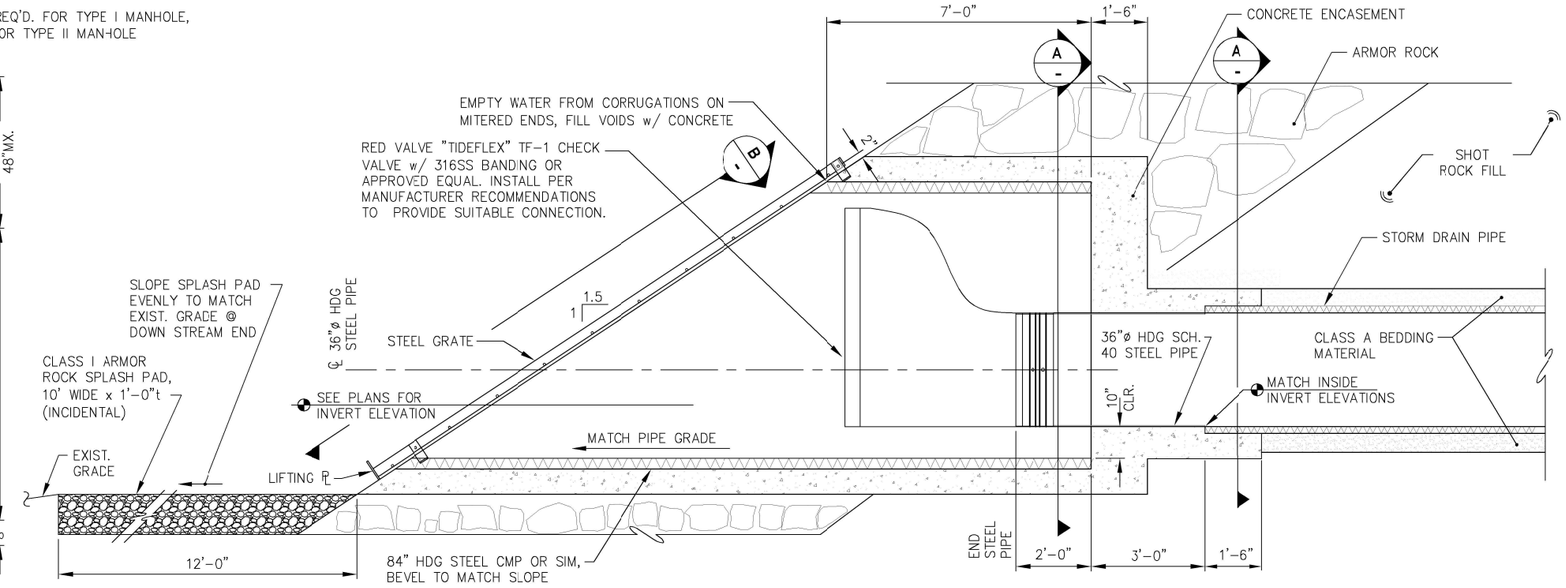

STORM DRAIN OUTFALL STRUCTURE

NOTE:
PROVIDE GEOTEXTILE FABRIC WRAP AROUND DISSIMILAR PIPE COUPLINGS PER CONCRETE ENCASEMENT DETAIL THIS SHEET.

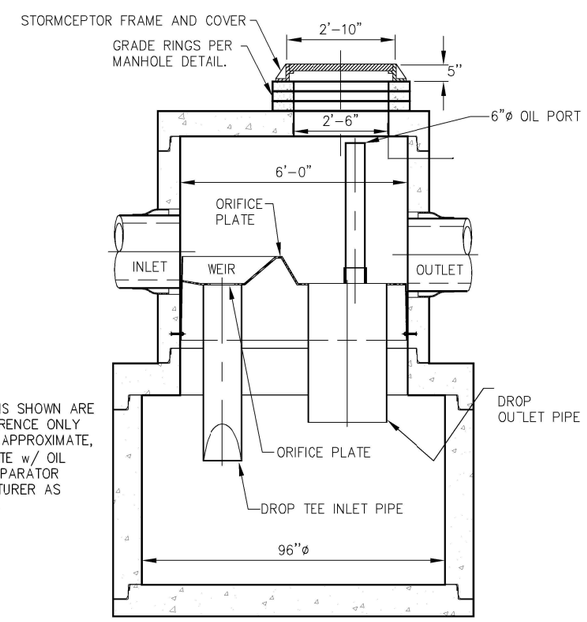

SECTION THROUGH CHAMBER

NOTE:
SUBGRADE PREPARATION SIMILAR TO S.D. MANHOLE

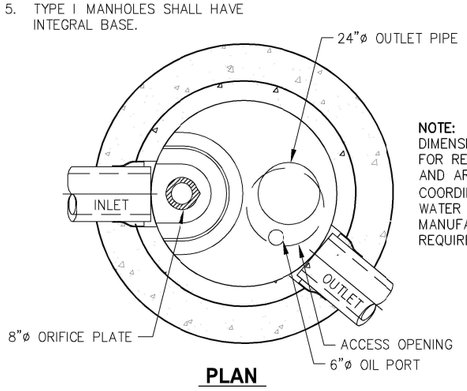

PLAN

NOTE:
DIMENSIONS SHOWN ARE FOR REFERENCE ONLY AND ARE APPROXIMATE, COORDINATE w/ OIL WATER SEPARATOR MANUFACTURER AS REQUIRED.

OIL WATER SEPARATOR

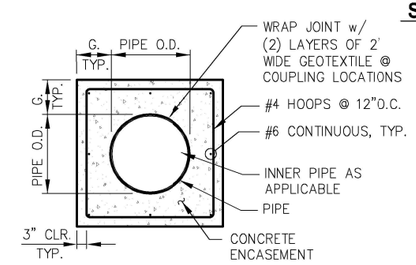

A - CONCRETE ENCASEMENT SECTION

CONCRETE ENCASEMENT NOTES:

1. G.=8" @ PIPE COUPLINGS 12" AROUND CMP PIPE FOR OUTFALL.
2. ENCASEMENTS SHALL BE 4' LONG UNO.
3. MATCH INSIDE INVERTS @ ALL LOCATIONS INCLUDING DISSIMILAR-SIZED PIPE.
4. CONTRACTOR SHALL TAKE MEASURES TO ENSURE CONCRETE DOES NOT ENTER PIPE (INCIDENTAL)

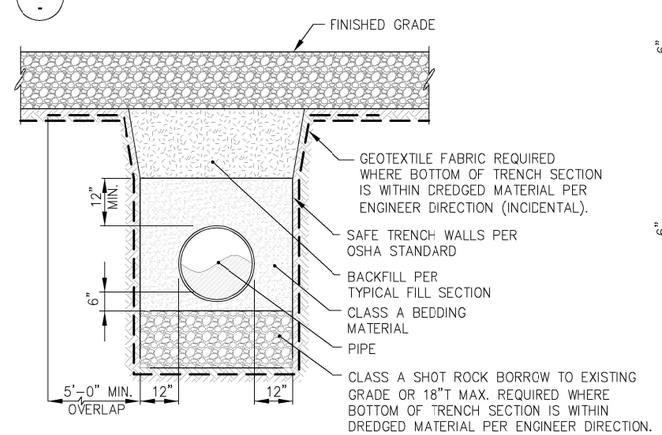

TYPICAL STORM DRAIN PIPE BEDDING SECTION

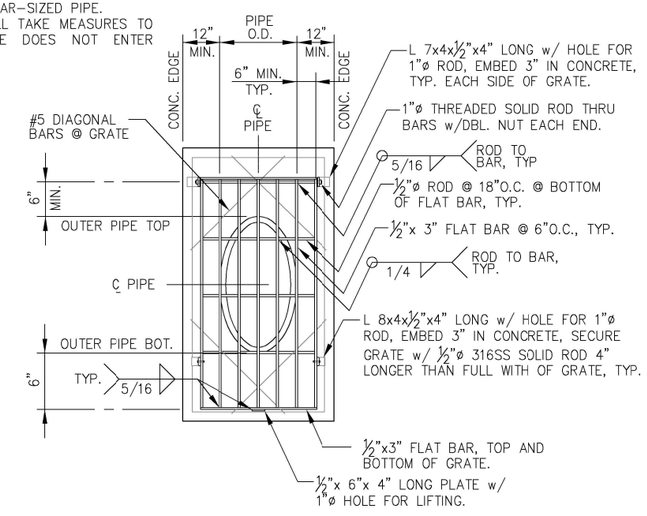

B - STEEL GRATE

REVISIONS

REV.	DATE	DESCRIPTION	DWN.	CKD.	APP.

PND ENGINEERS, INC.
9360 Glacier Highway, Ste. 100
Juneau, Alaska 99801
Phone: 907-586-2093
Fax: 907-586-2099
www.pndengineers.com

DESIGN: TCB CHECKED: CRS
DRAWN: DRD APPROVED: CRS
SCALE: NTS

STATE OF ALASKA 49TH Charles R. Somerville CE-8845 REGISTERED PROFESSIONAL ENGINEER
DATE: 8/23/16

HAINES BOROUGH
PORTAGE COVE
HARBOR EXPANSION

SHEET TITLE:
STORM DRAIN DETAILS

PND PROJECT NO.: 102029.01

4.04

SHEET 17 OF 32

NOTES:

1. VERTICAL DATUM IS MEAN LOWER LOW WATER (MLLW = 0 FEET).
2. ENCOUNTERING COBBLE AND BOULDER-SIZE MATERIAL SHOULD BE ANTICIPATED WITHIN ANY OF THE REPRESENTED SOIL HORIZONS.
3. MAINTAIN VESSEL ACCESS TO EXISTING MOORAGE FLOATS AT ALL TIMES.

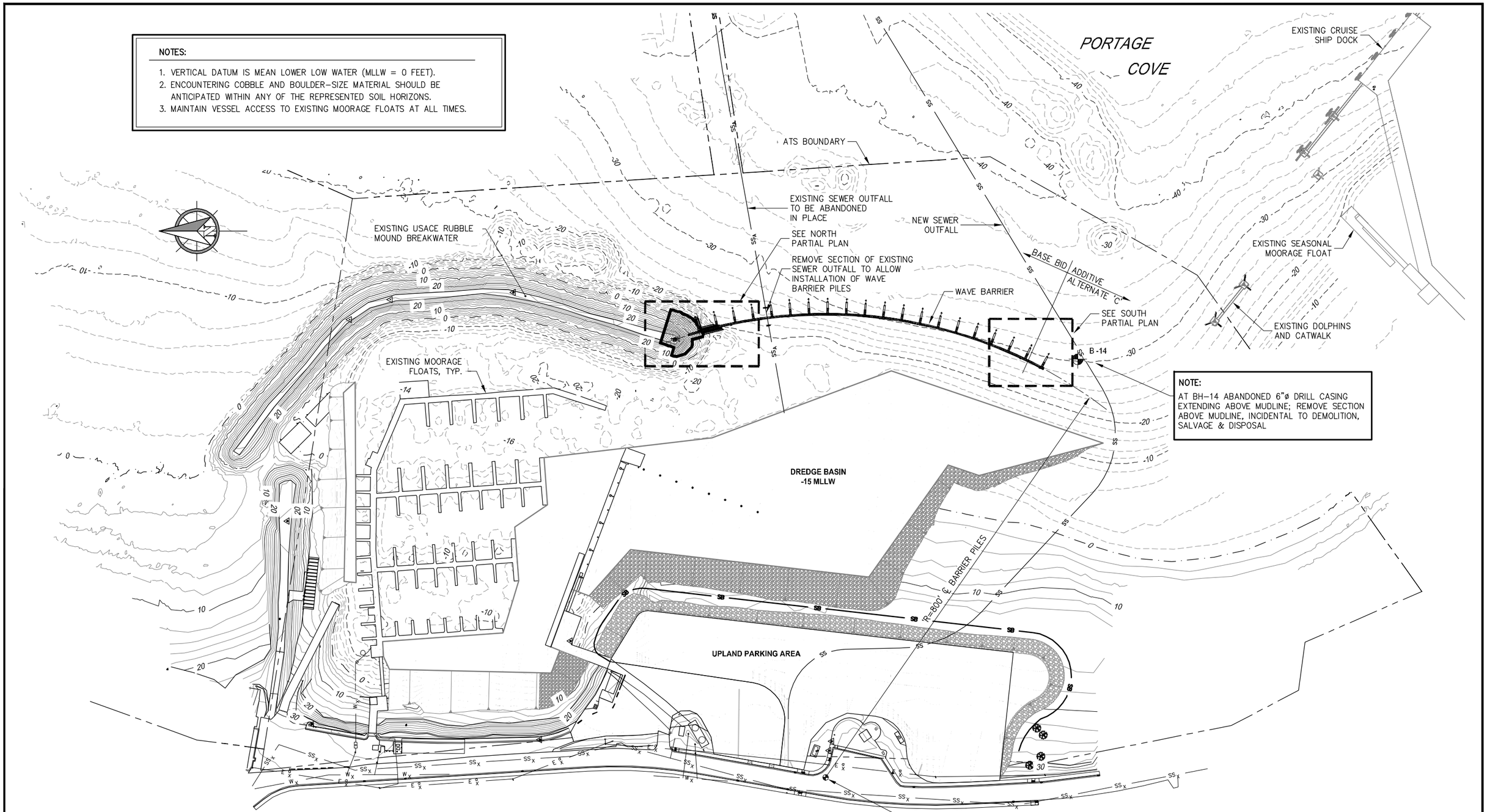

NOTE:

AT BH-14 ABANDONED 6"ø DRILL CASING EXTENDING ABOVE MUDLINE; REMOVE SECTION ABOVE MUDLINE, INCIDENTAL TO DEMOLITION, SALVAGE & DISPOSAL

WAVE BARRIER SITE PLAN

HAINES BOROUGH ALASKA

REVISIONS

REV.	DATE	DESCRIPTION	DWN.	CKD.	APP.

PND ENGINEERS, INC.
9360 Glacier Highway, Ste. 100
Juneau, Alaska 99801
Phone: 907-586-2093
Fax: 907-586-2099
www.pndengineers.com

DESIGN: JDO CHECKED: CRS
DRAWN: GRD APPROVED: CRS
SCALE: SCALE IN FEET 0 40 80 160 FT.

STATE OF ALASKA 49TH Charles R. Somerville CE-8845 REGISTERED PROFESSIONAL ENGINEER
DATE: 8/23/16

HAINES BOROUGH
PORTAGE COVE
HARBOR EXPANSION

SHEET TITLE: **WAVE BARRIER SITE PLAN**

PND PROJECT NO.: 102029.01

5.01

SHEET 18 OF 32

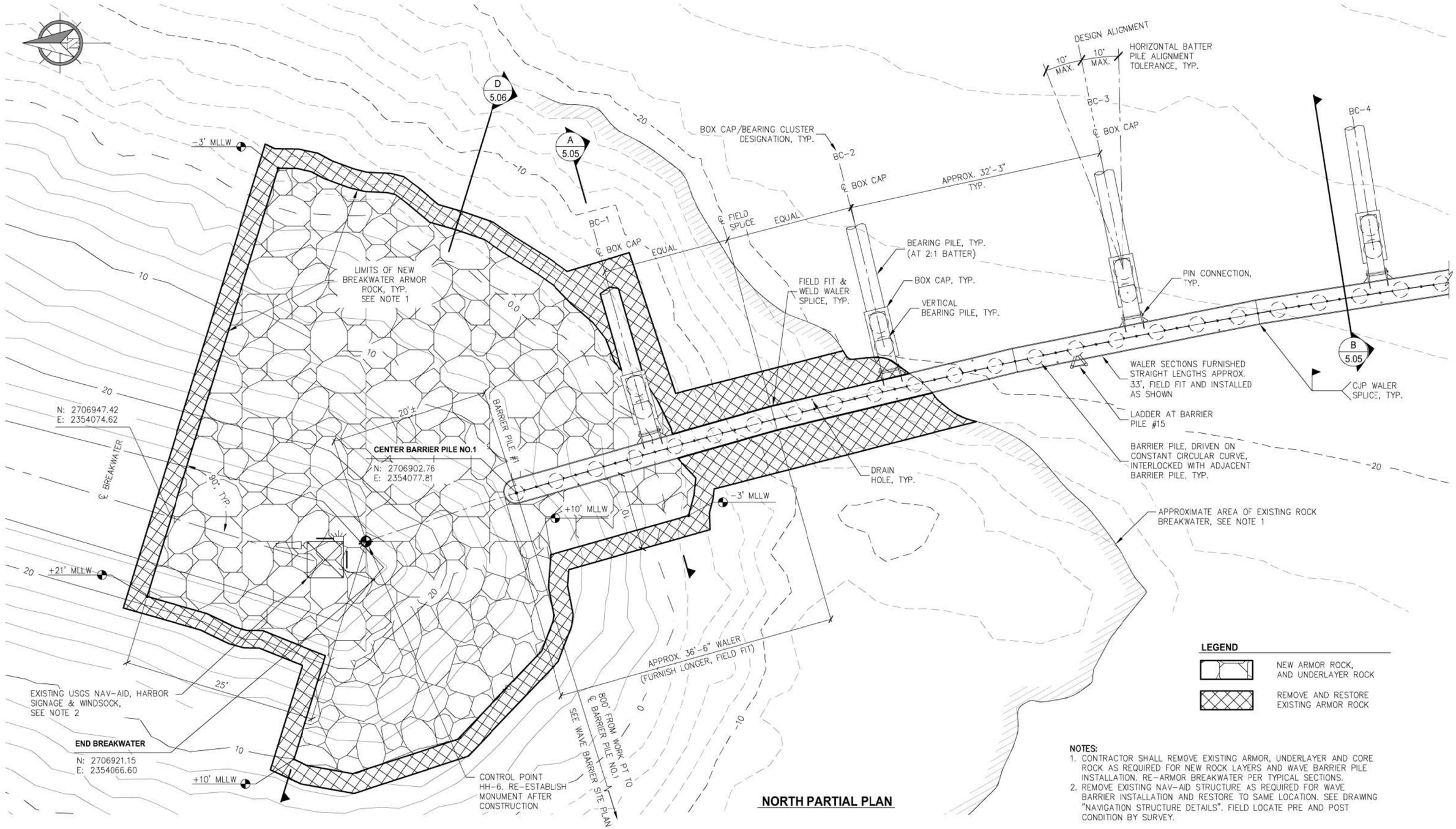

NORTH PARTIAL PLAN

NOTES:
1. CONTRACTOR SHALL REMOVE EXISTING ARMOR, UNDERLAYER AND CORE ROCK AS REQUIRED FOR NEW ROCK LAYERS AND WAVE BARRIER PILE INSTALLATION. RE-ARMOR BREAKWATER PER TYPICAL SECTIONS.
2. REMOVE EXISTING NAV-AID STRUCTURE AS REQUIRED FOR WAVE BARRIER INSTALLATION AND RESTORE TO SAME LOCATION. SEE DRAWING "NAVIGATION STRUCTURE DETAILS". FIELD LOCATE PRE AND POST CONDITION BY SURVEY.

HAINES BOROUGH ALASKA

REVISIONS

REV.	DATE	DESCRIPTION	DWN.	CKD.	APP.

PND ENGINEERS, INC.
9360 Glacier Highway, Ste. 100
Juneau, Alaska 99801
Phone: 907-586-2093
Fax: 907-586-2099
www.pndengineers.com

DESIGN: JDO CHECKED: CRS
DRAWN: GRD APPROVED: CRS
SCALE: SCALE IN FEET 0 6 12 FT.

STATE OF ALASKA 49TH Charles R. Somerville CE-8845 REGISTERED PROFESSIONAL ENGINEER
DATE: 8/23/16

HAINES BOROUGH
PORTAGE COVE
HARBOR EXPANSION

SHEET TITLE: WAVE BARRIER NORTH PARTIAL PLAN

PND PROJECT NO.: 102029.01

5.02

SHEET 19 OF 32

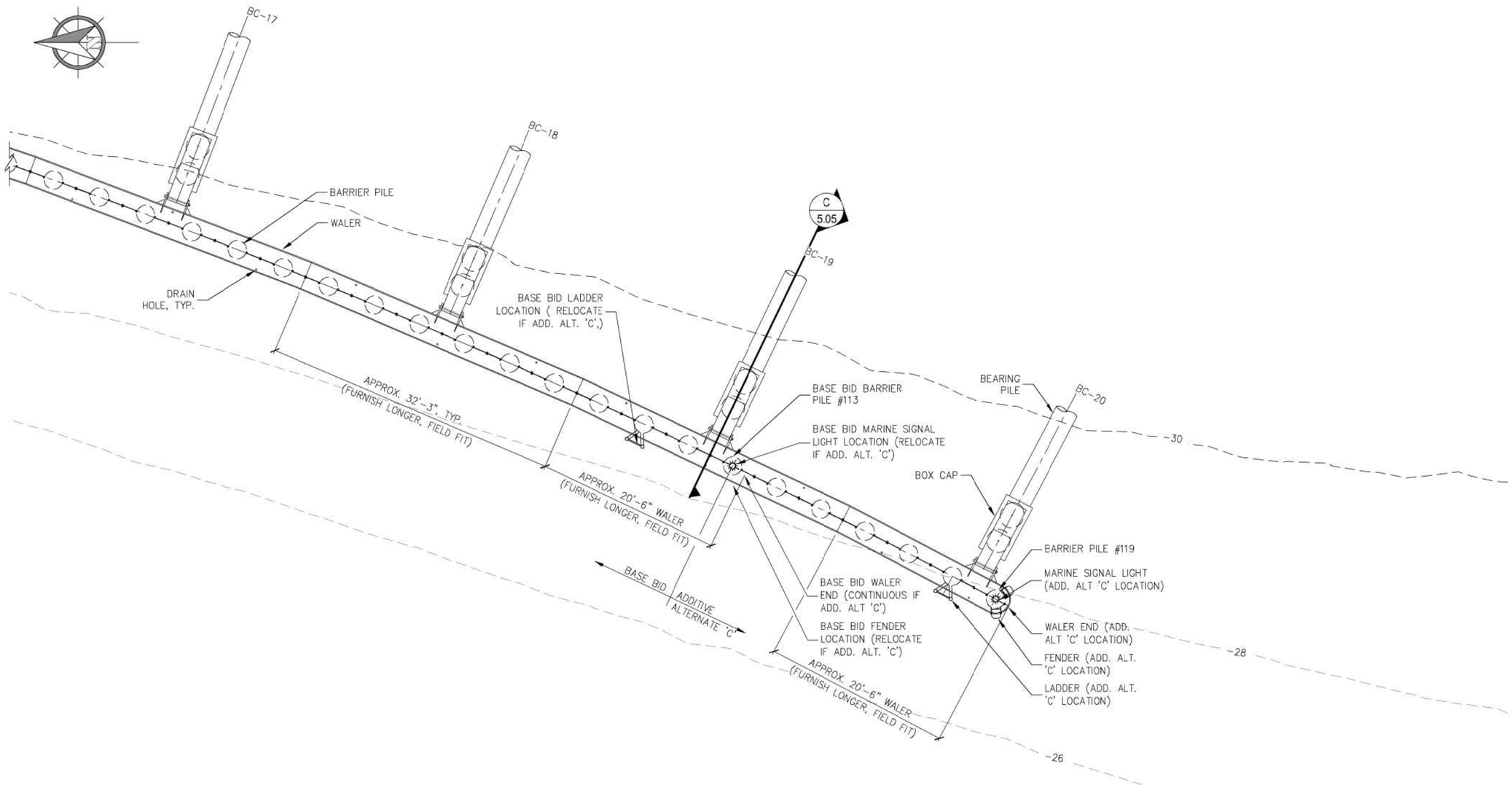

SOUTH PARTIAL PLAN

REVISIONS

REV.	DATE	DESCRIPTION	DWN.	CKD.	APP.

PND ENGINEERS, INC.
9360 Glacier Highway, Ste. 100
Juneau, Alaska 99801
Phone: 907-586-2093
Fax: 907-586-2099
www.pndengineers.com

DESIGN: JDO CHECKED: CRS
DRAWN: GRD APPROVED: CRS
SCALE: SCALE IN FEET 0 6 12 FT.
DATE: 8/23/16

STATE OF ALASKA 49TH Charles R. Somerville CE-8845 REGISTERED PROFESSIONAL ENGINEER

HAINES BOROUGH PORTAGE COVE HARBOR EXPANSION

SHEET TITLE: **WAVE BARRIER SOUTH PARTIAL PLAN**

PND PROJECT NO.: 102029.01

5.03

SHEET 20 OF 32

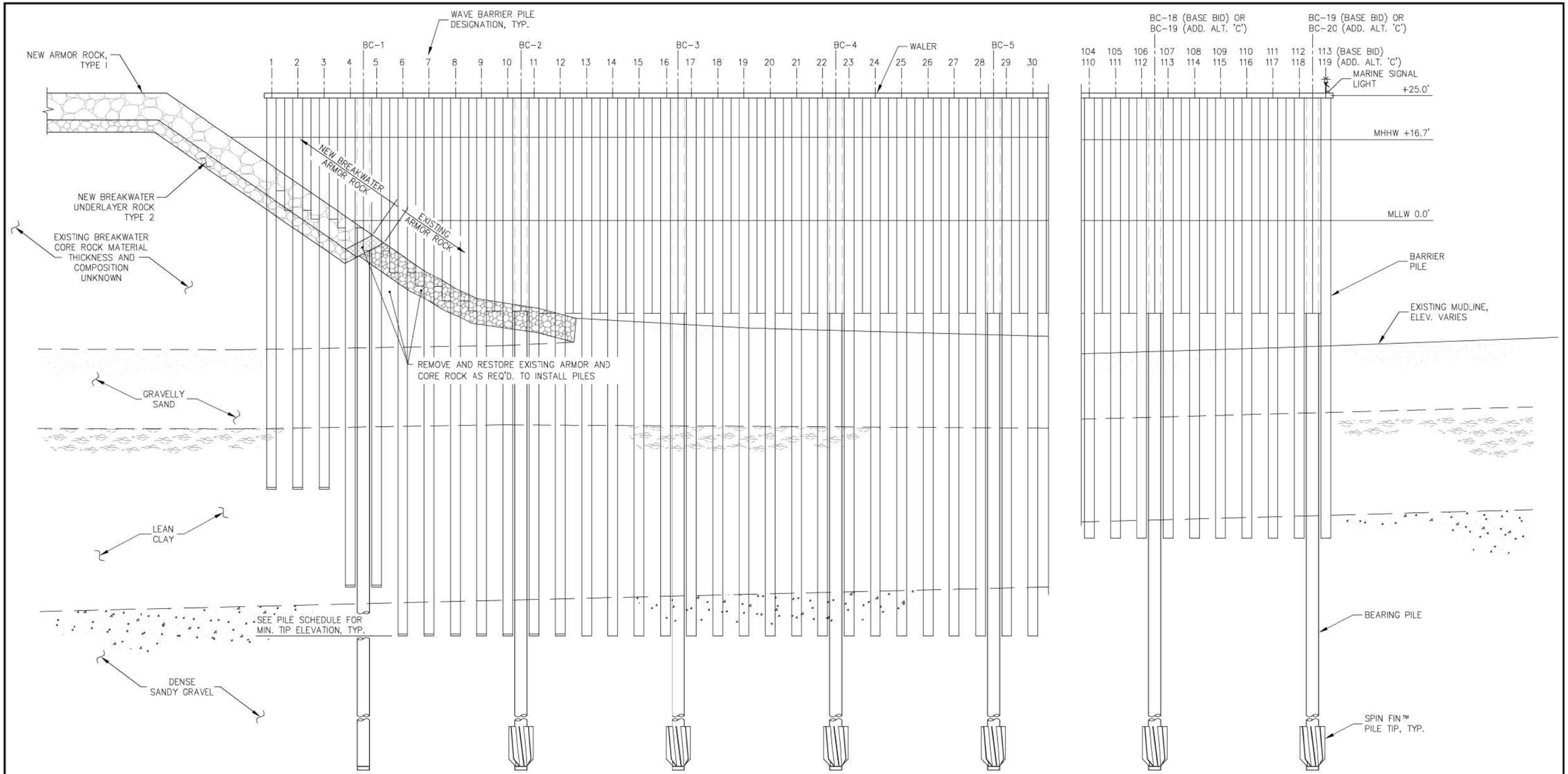

NOTE:
1. SOIL INFORMATION SHOWN IS APPROXIMATE AND FOR GENERAL ILLUSTRATION PURPOSES ONLY. SEE GEOTECHNICAL REPORT FOR SPECIFIC SOILS INFORMATION.
2. SEE PILE SCHEDULE FOR DETAILS NOT SHOWN AND INSTALLATION CRITERIA.

PARTIAL ELEVATION

NOTE: LADDERS NOT SHOWN FOR CLARITY

HAINES BOROUGH ALASKA

SPIN FIN™ PILE IS A REGISTERED TRADEMARK OF PND ENGINEERS, INC.

REVISIONS

REV.	DATE	DESCRIPTION	DWN.	CKD.	APP.

PND ENGINEERS, INC.
9360 Glacier Highway, Ste. 100
Juneau, Alaska 99801
Phone: 907-586-2093
Fax: 907-586-2099
www.pndengineers.com

DESIGN: JDO CHECKED: CRS
DRAWN: GRD APPROVED: CRS
SCALE: SCALE IN FEET 0 10 20 FT.

STATE OF ALASKA 49TH Charles R. Somerville CE-8845 REGISTERED PROFESSIONAL ENGINEER
DATE: 8/23/16

HAINES BOROUGH
PORTAGE COVE
HARBOR EXPANSION

SHEET TITLE: PARTIAL ELEVATION

5.04

PND PROJECT NO.: 102029.01

SHEET 21 OF 32

NEW ARMOR ROCK SIZE:

NEW ARMOR ROCK TYPE 1

NEW UNDERLAYER ROCK TYPE 2

REMOVE AND RESTORE EXISTING BREAKWATER ROCK

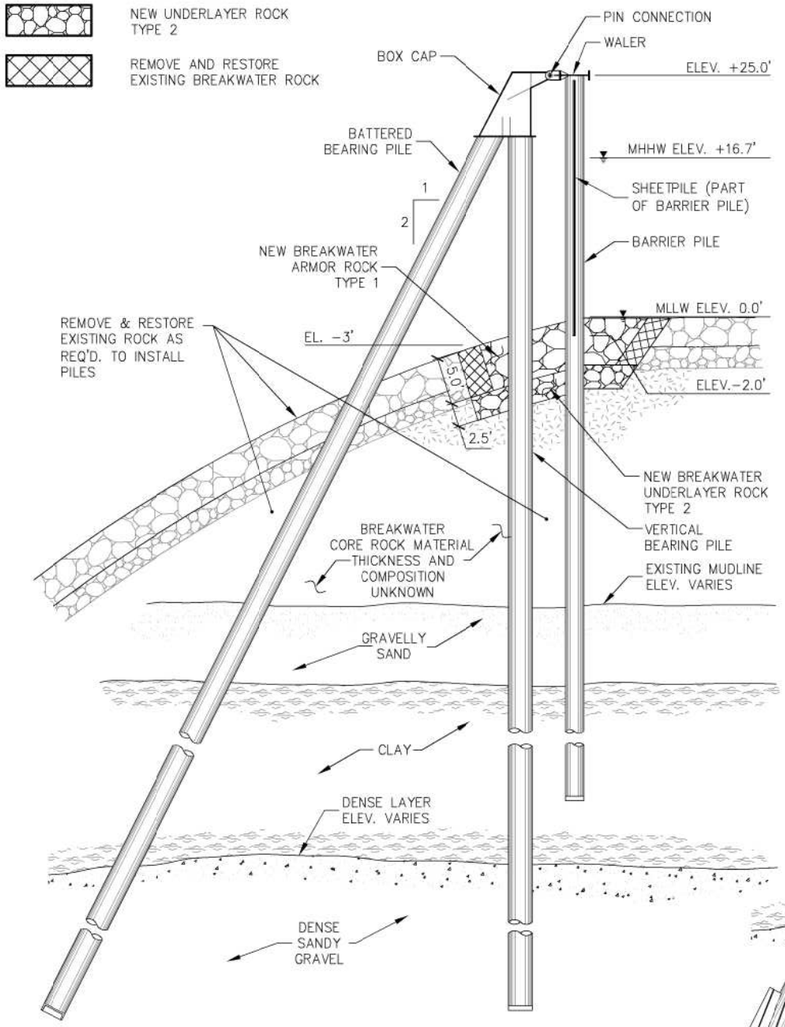

A 5.02 **TYPICAL SECTION**

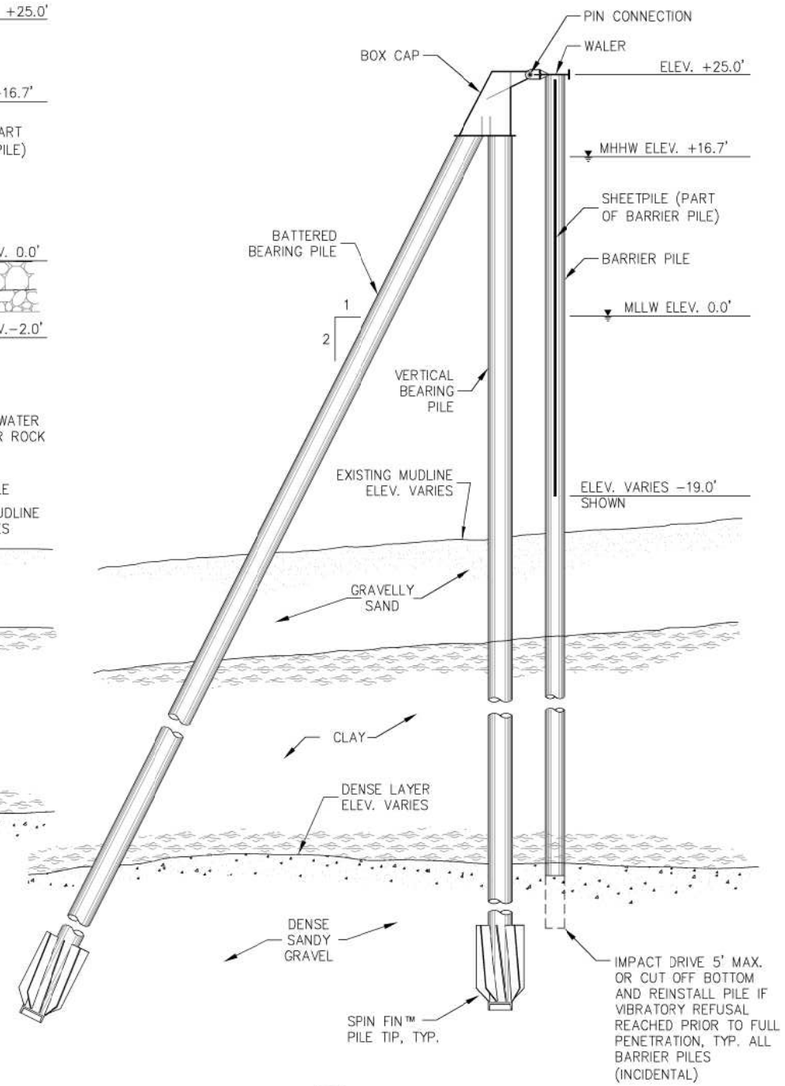

B 5.02 **TYPICAL SECTION**

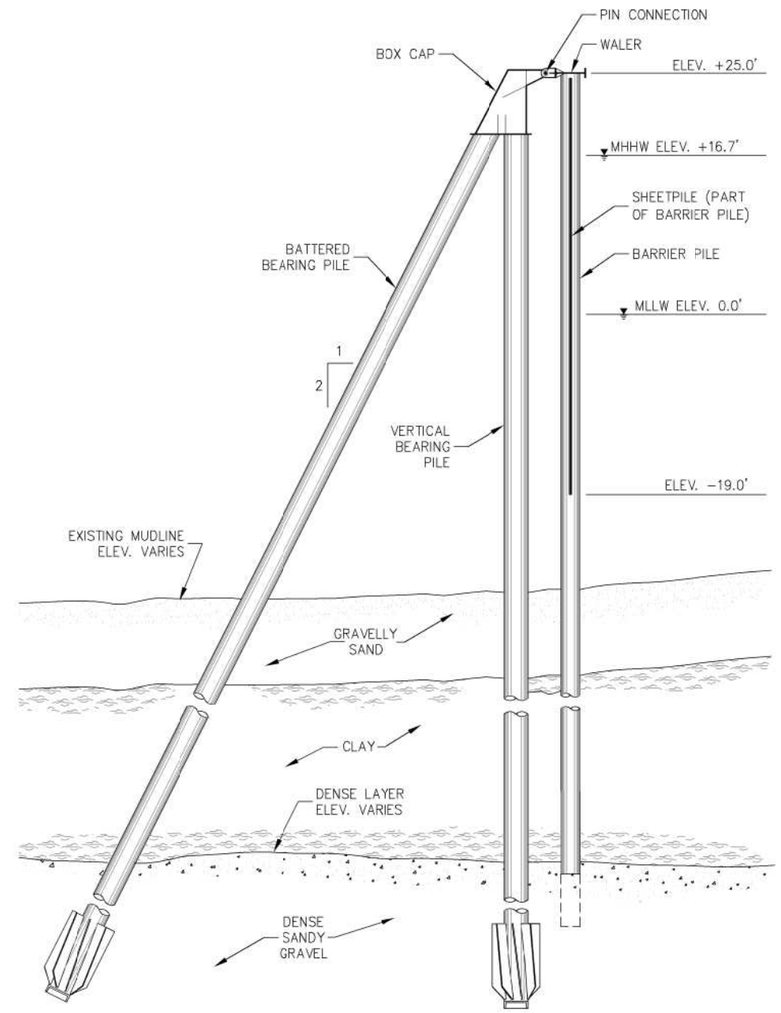

C 5.03 **TYPICAL SECTION**

SPIN FIN™ PILE IS A REGISTERED TRADEMARK OF PND ENGINEERS, INC.

REVISIONS

REV.	DATE	DESCRIPTION	DWN.	CKD.	APP.

PND ENGINEERS, INC.
9360 Glacier Highway, Ste. 100
Juneau, Alaska 99801
Phone: 907-586-2093
Fax: 907-586-2099
www.pndengineers.com

DESIGN: JDO CHECKED: CRS
DRAWN: GRD APPROVED: CRS
SCALE: SCALE IN FEET 0 8 16 FT.

STATE OF ALASKA 49TH Charles R. Somerville CE-8845 REGISTERED PROFESSIONAL ENGINEER
DATE: 8/23/16

HAINES BOROUGH PORTAGE COVE HARBOR EXPANSION

SHEET TITLE: **TYPICAL SECTIONS**

PND PROJECT NO.: 102029.01

5.05

SHEET 22 OF 32

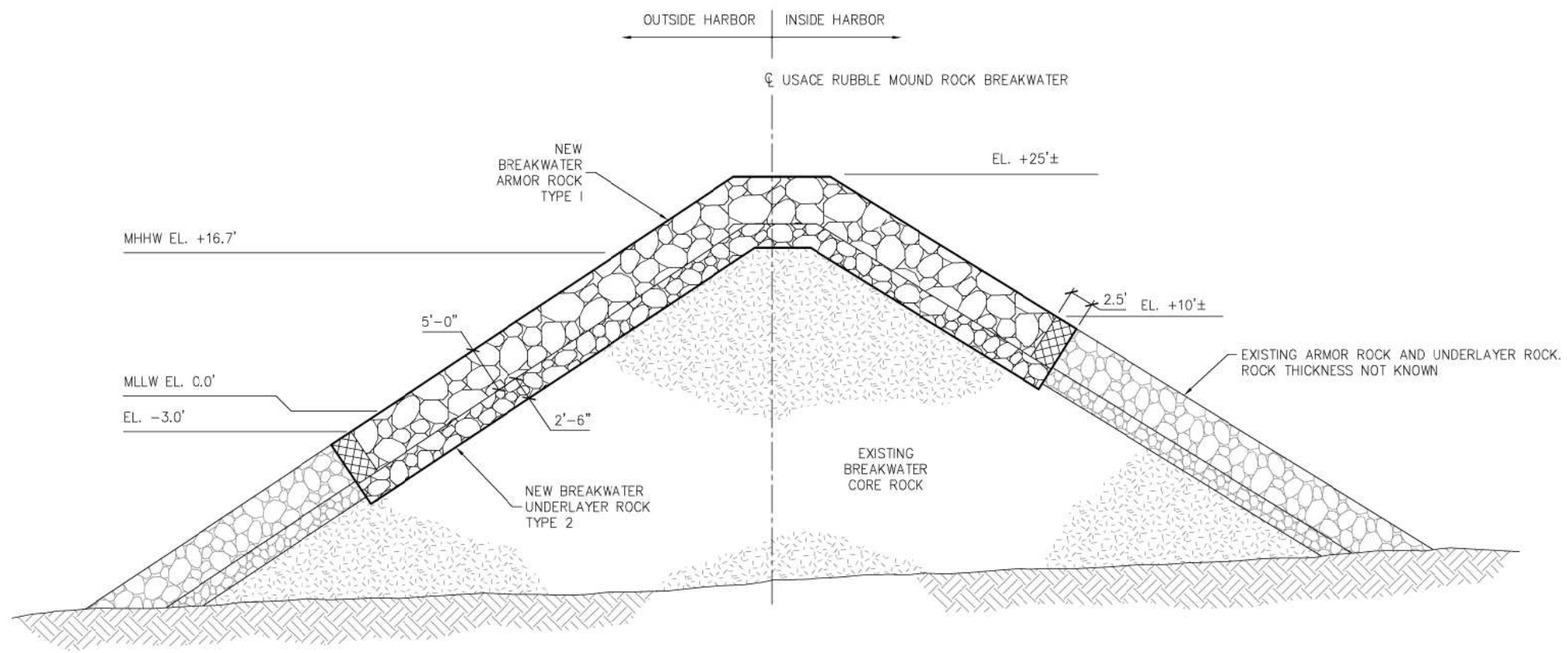

D 5.02 **TYPICAL SECTION**

NEW ARMOR ROCK SIZE:

- NEW ARMOR ROCK TYPE 1
- NEW UNDERLAYER ROCK TYPE 2
- REMOVE AND RESTORE EXISTING ARMOR ROCK

REVISIONS

REV.	DATE	DESCRIPTION	DWN.	CKD.	APP.

PND ENGINEERS, INC.
9360 Glacier Highway, Ste. 100
Juneau, Alaska 99801
Phone: 907-586-2093
Fax: 907-586-2099
www.pndengineers.com

DESIGN: JDO CHECKED: CRS
DRAWN: GRD APPROVED: CRS
SCALE:

STATE OF ALASKA 49TH Charles R. Somerville CE-8845 REGISTERED PROFESSIONAL ENGINEER
DATE: 8/23/16

HAINES BOROUGH
PORTAGE COVE
HARBOR EXPANSION

SHEET TITLE: ROCK BREAKWATER SECTION

5.06

SHEET 23 OF 32

PND PROJECT NO.: 102029.01

WAVE BARRIER PILE SCHEDULE

PILE LOCATION	PILE SIZE DIAMETER X WALL	SUPPLY LENGTH (FT)	MAX. LENGTH OF BARE PILE (FT)	LENGTH OF SHEETPILE (FT)	TIP TYPE	PILE TIP ELEVATION (FT MLLW)	DESIGN COMPRESSION CAPACITY (ALLOWABLE/ ULTIMATE) (kips)	COMMENTS
1	24"dia x 0.500"t	80	40	20	Cutting Shoe	-55	--	PS31 one side of pile only*
2	24"dia x 0.500"t	80	40	23	Cutting Shoe	-55	--	PS31 both sides
3	24"dia x 0.500"t	80	40	25	Cutting Shoe	-55	--	PS31 both sides
4	24"dia x 0.500"t	100	50	27	Cutting Shoe	-75	--	PS31 both sides
5	24"dia x 0.500"t	100	50	32	Cutting Shoe	-75	--	PS31 both sides
6	24"dia x 0.500"t	100	60	36	Cutting Shoe	-75	--	PS31 both sides
7	24"dia x 0.500"t	100	60	40	Cutting Shoe	-75	--	PS31 both sides
8	24"dia x 0.500"t	100	60	42	Cutting Shoe	-75	--	PS31 both sides
9	24"dia x 0.500"t	100	60	44	Cutting Shoe	-75	--	PS31 both sides
10	24"dia x 0.500"t	110	60	44	Cutting Shoe	-85	--	PS31 both sides
11	24"dia x 0.500"t	110	60	44	Cutting Shoe	-85	--	PS31 both sides
12	24"dia x 0.500"t	110	60	44	Cutting Shoe	-85	--	PS31 both sides
13	24"dia x 0.500"t	110	60	44	None	-85	--	PS31 both sides
14	24"dia x 0.500"t	110	60	44	None	-85	--	PS31 both sides
15	24"dia x 0.500"t	110	60	44	None	-85	--	PS31 both sides
16	24"dia x 0.500"t	110	60	44	None	-85	--	PS31 both sides
17	24"dia x 0.500"t	110	60	44	None	-85	--	PS31 both sides
18	24"dia x 0.500"t	110	60	44	None	-85	--	PS31 both sides
19	24"dia x 0.500"t	110	60	44	None	-85	--	PS31 both sides
20	24"dia x 0.500"t	110	60	44	None	-85	--	PS31 both sides
21	24"dia x 0.500"t	110	60	44	None	-85	--	PS31 both sides
22	24"dia x 0.500"t	110	60	44	None	-85	--	PS31 both sides
23	24"dia x 0.500"t	110	60	44	None	-85	--	PS31 both sides
24	24"dia x 0.500"t	110	60	44	None	-85	--	PS31 both sides
25	24"dia x 0.500"t	110	60	44	None	-85	--	PS31 both sides
26	24"dia x 0.500"t	110	60	44	None	-85	--	PS31 both sides
27	24"dia x 0.500"t	110	60	44	None	-85	--	PS31 both sides
28	24"dia x 0.500"t	110	60	44	None	-85	--	PS31 both sides
29	24"dia x 0.500"t	110	60	44	None	-85	--	PS31 both sides
30	24"dia x 0.500"t	110	60	44	None	-85	--	PS31 both sides
31	24"dia x 0.500"t	110	60	44	None	-85	--	PS31 both sides
32	24"dia x 0.500"t	110	60	44	None	-85	--	PS31 both sides
33	24"dia x 0.500"t	110	60	44	None	-85	--	PS31 both sides
34	24"dia x 0.500"t	110	60	44	None	-85	--	PS31 both sides
35	24"dia x 0.500"t	100	50	44	None	-75	--	PS31 both sides
36	24"dia x 0.500"t	100	50	44	None	-75	--	PS31 both sides
37	24"dia x 0.500"t	100	50	44	None	-75	--	PS31 both sides
38	24"dia x 0.500"t	100	50	44	None	-75	--	PS31 both sides
39	24"dia x 0.500"t	100	50	44	None	-75	--	PS31 both sides
40	24"dia x 0.500"t	100	50	44	None	-75	--	PS31 both sides
41	24"dia x 0.500"t	100	50	44	None	-75	--	PS31 both sides
42	24"dia x 0.500"t	100	50	44	None	-75	-	PS31 both sides
43	24"dia x 0.500"t	100	50	44	None	-75	--	PS31 both sides
44	24"dia x 0.500"t	100	50	44	None	-75	--	PS31 both sides
45	24"dia x 0.500"t	100	50	44	None	-75	--	PS31 both sides
46	24"dia x 0.500"t	100	50	44	None	-75	--	PS31 both sides
47	24"dia x 0.500"t	100	50	44	None	-75	--	PS31 both sides
48	24"dia x 0.500"t	100	50	44	None	-75	--	PS31 both sides
49	24"dia x 0.500"t	100	50	44	None	-75	--	PS31 both sides
50	24"dia x 0.500"t	100	50	44	None	-75	--	PS31 both sides

* PAY PARTICULAR ATTENTION TO INTERLOCK ORIENTATION

WAVE BARRIER PILE SCHEDULE (Cont.)

PILE LOCATION	PILE SIZE DIAMETER X WALL	SUPPLY LENGTH (FT)	MAX. LENGTH OF BARE PILE (FT)	LENGTH OF SHEETPILE (FT)	TIP TYPE	PILE TIP ELEVATION (FT MLLW)	DESIGN COMPRESSION CAPACITY (ALLOWABLE/ ULTIMATE) (kips)	COMMENTS
51	24"dia x 0.500"t	100	50	44	None	-75	--	PS31 both sides
52	24"dia x 0.500"t	100	50	44	None	-75	--	PS31 both sides
53	24"dia x 0.500"t	100	50	44	None	-75	--	PS31 both sides
54	24"dia x 0.500"t	100	50	44	None	-75	--	PS31 both sides
55	24"dia x 0.500"t	100	50	44	None	-75	--	PS31 both sides
56	24"dia x 0.500"t	100	50	44	None	-75	--	PS31 both sides
57	24"dia x 0.500"t	100	50	44	None	-75	--	PS31 both sides
58	24"dia x 0.500"t	100	50	44	None	-75	--	PS31 both sides
59	24"dia x 0.500"t	100	50	44	None	-75	--	PS31 both sides
60	24"dia x 0.500"t	100	50	44	None	-75	--	PS31 both sides
61	24"dia x 0.500"t	100	50	44	None	-75	--	PS31 both sides
62	24"dia x 0.500"t	100	50	44	None	-75	--	PS31 both sides
63	24"dia x 0.500"t	100	50	44	None	-75	--	PS31 both sides
64	24"dia x 0.500"t	100	50	44	None	-75	--	PS31 both sides
65	24"dia x 0.500"t	100	50	44	None	-75	--	PS31 both sides
66	24"dia x 0.500"t	100	50	44	None	-75	--	PS31 both sides
67	24"dia x 0.500"t	100	50	44	None	-75	--	PS31 both sides
68	24"dia x 0.500"t	100	50	44	None	-75	--	PS31 both sides
69	24"dia x 0.500"t	100	50	44	None	-75	--	PS31 both sides
70	24"dia x 0.500"t	100	50	44	None	-75	--	PS31 both sides
71	24"dia x 0.500"t	100	50	44	None	-75	--	PS31 both sides
72	24"dia x 0.500"t	100	50	44	None	-75	--	PS31 both sides
73	24"dia x 0.500"t	100	50	44	None	-75	--	PS31 both sides
74	24"dia x 0.500"t	100	50	44	None	-75	--	PS31 both sides
75	24"dia x 0.500"t	100	50	44	None	-75	--	PS31 both sides
76	24"dia x 0.500"t	100	50	44	None	-75	--	PS31 both sides
77	24"dia x 0.500"t	100	50	44	None	-75	--	PS31 both sides
78	24"dia x 0.500"t	100	50	44	None	-75	--	PS31 both sides
79	24"dia x 0.500"t	100	50	44	None	-75	--	PS31 both sides
80	24"dia x 0.500"t	100	50	44	None	-75	--	PS31 both sides
81	24"dia x 0.500"t	100	50	44	None	-75	--	PS31 both sides
82	24"dia x 0.500"t	100	50	44	None	-75	--	PS31 both sides
83	24"dia x 0.500"t	100	50	44	None	-75	--	PS31 both sides
84	24"dia x 0.500"t	100	50	44	None	-75	--	PS31 both sides
85	24"dia x 0.500"t	100	50	44	None	-75	--	PS31 both sides
86	24"dia x 0.500"t	100	50	44	None	-75	--	PS31 both sides
87	24"dia x 0.500"t	100	50	44	None	-75	--	PS31 both sides
88	24"dia x 0.500"t	100	50	44	None	-75	--	PS31 both sides
89	24"dia x 0.500"t	100	50	44	None	-75	--	PS31 both sides
90	24"dia x 0.500"t	100	50	44	None	-75	--	PS31 both sides
91	24"dia x 0.500"t	100	50	44	None	-75	--	PS31 both sides
92	24"dia x 0.500"t	100	50	44	None	-75	--	PS31 both sides
93	24"dia x 0.500"t	100	50	44	None	-75	--	PS31 both sides
94	24"dia x 0.500"t	100	50	44	None	-75	--	PS31 both sides
95	24"dia x 0.500"t	90	40	44	None	-65	--	PS31 both sides
96	24"dia x 0.500"t	90	40	44	None	-65	--	PS31 both sides
97	24"dia x 0.500"t	90	40	44	None	-65	--	PS31 both sides
98	24"dia x 0.500"t	90	40	44	None	-65	--	PS31 both sides
99	24"dia x 0.500"t	90	40	44	None	-65	--	PS31 both sides
100	24"dia x 0.500"t	90	40	44	None	-65	--	PS31 both sides

NOTE: CUTTING SHOE SHALL BE APF OUTSIDE FLANGED OPEN CUTTING SHOE OR APPROVED EQUAL

REVISIONS

REV.	DATE	DESCRIPTION	DWN.	CKD.	APP.

PND ENGINEERS, INC.
9360 Glacier Highway, Ste. 100
Juneau, Alaska 99801
Phone: 907-586-2093
Fax: 907-586-2099
www.pndengineers.com

DESIGN: JDO CHECKED: CRS
DRAWN: GRD APPROVED: CRS
SCALE:

STATE OF ALASKA 49TH Charles R. Somerville CE-8645 REGISTERED PROFESSIONAL ENGINEER
DATE: 8/23/16

HAINES BOROUGH PORTAGE COVE HARBOR EXPANSION

SHEET TITLE: **PILE SCHEDULE**

PND PROJECT NO.: 102029.01

5.07

SHEET 24 OF 32

WAVE BARRIER PILE SCHEDULE (Cont.)

PILE LOCATION	PILE SIZE DIAMETER x WALL	SUPPLY LENGTH (FT)	MAX. LENGTH OF BARE PILE (FT)	LENGTH OF SHEETPILE (FT)	TIP TYPE	PILE TIP ELEVATION (FT MLLW)	DESIGN COMPRESSION CAPACITY (ALLOWABLE/ ULTIMATE) (kips)	COMMENTS
101	24"dia x 0.500"t	90	40	44	None	−65	--	PS31 both sides
102	24"dia x 0.500"t	90	40	44	None	−65	--	PS31 both sides
103	24"dia x 0.500"t	90	40	44	None	−65	--	PS31 both sides
104	24"dia x 0.500"t	90	40	44	None	−65	--	PS31 both sides
105	24"dia x 0.500"t	90	40	44	None	−65	--	PS31 both sides
106	24"dia x 0.500"t	90	40	44	None	−65	--	PS31 both sides
107	24"dia x 0.500"t	90	40	44	None	−65	--	PS31 both sides
108	24"dia x 0.500"t	90	40	44	None	−65	--	PS31 both sides
109	24"dia x 0.500"t	90	40	44	None	−65	--	PS31 both sides
110	24"dia x 0.500"t	90	40	44	None	−65	--	PS31 both sides
111	24"dia x 0.500"t	90	40	44	None	−65	--	PS31 both sides
112	24"dia x 0.500"t	90	40	44	None	−65	--	PS31 both sides
113	24"dia x 0.500"t	90	40	44	None	−65	--	PS31 one side of pile only (see detail below)
ADDITIVE ALTERNATE 'C'								
113	24"dia x 0.500"t	90	40	44	None	−65	--	PS31 both sides of pile (see detail below)
114	24"dia x 0.500"t	90	40	44	None	−65	--	PS31 both sides
115	24"dia x 0.500"t	90	40	44	None	−65	--	PS31 both sides
116	24"dia x 0.500"t	90	40	44	None	−65	--	PS31 both sides
117	24"dia x 0.500"t	90	40	44	None	−65	--	PS31 both sides
118	24"dia x 0.500"t	90	40	44	None	−65	--	PS31 both sides
119	24"dia x 0.500"t	90	40	44	None	−65	--	PS31 one side of pile only*

* PAY PARTICULAR ATTENTION TO INTERLOCK ORIENTATION

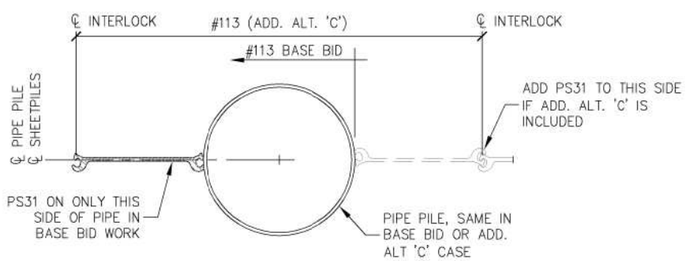

BARRIER PILE #113
(USE APPROPRIATE PILE FOR BASE BID OR ADD. ALT. 'C')

BEARING PILE SCHEDULE

PILE LOCATION	PILE BATTER	PILE SIZE DIAMETER x WALL	SUPPLY LENGTH (FT)	LENGTH OF BARE PILE (FT)	TIP TYPE	CAPACITY (ALLOWABLE/ULTIMATE) (kips)		MINIMUM TIP ELEVATION (FT MLLW)
						COMPRESSION	TENSION	
BC−1	Vertical	30"dia x 0.75"t	160	80	Cutting Shoe Only	300/680	290/650	−135
	2:1	30"dia x 0.750"t	200	100	Cutting Shoe Only	335/750	325/730	−155
BC−2	Vertical	30"dia x 0.750"t	160	80	SPIN FIN	550/1240	525/1180	−135
	2:1	30"dia x 0.750"t	200	100	SPIN FIN	600/1350	575/1300	−155
BC−3	Vertical**	30"dia x 0.750"t	160	80	SPIN FIN	550/1240	525/1180	−135
	2:1**	30"dia x 0.750"t	200	100	SPIN FIN	600/1350	575/1300	−155
BC−4	Vertical	30"dia x 0.750"t	160	80	SPIN FIN	550/1240	525/1180	−135
	2:1	30"dia x 0.750"t	200	100	SPIN FIN	600/1350	575/1300	−155
BC−5	Vertical	30"dia x 0.750"t	160	80	SPIN FIN	550/1240	525/1180	−135
	2:1	30"dia x 0.750"t	200	100	SPIN FIN	600/1350	575/1300	−155
BC−6	Vertical	30"dia x 0.750"t	160	80	SPIN FIN	550/1240	525/1180	−135
	2:1	30"dia x 0.750"t	200	100	SPIN FIN	600/1350	575/1300	−155
BC−7	Vertical	30"dia x 0.750"t	160	80	SPIN FIN	550/1240	525/1180	−135
	2:1	30"dia x 0.750"t	200	100	SPIN FIN	600/1350	575/1300	−155
BC−8	Vertical	30"dia x 0.750"t	160	80	SPIN FIN	550/1240	525/1180	−135
	2:1	30"dia x 0.750"t	200	100	SPIN FIN	600/1350	575/1300	−155
BC−9	Vertical	30"dia x 0.750"t	160	80	SPIN FIN	550/1240	525/1180	−135
	2:1	30"dia x 0.750"t	200	100	SPIN FIN	600/1350	575/1300	−155
BC−10	Vertical	30"dia x 0.750"t	160	80	SPIN FIN	550/1240	525/1180	−135
	2:1	30"dia x 0.750"t	200	100	SPIN FIN	600/1350	575/1300	−155
BC−11	Vertical**	30"dia x 0.750"t	160	80	SPIN FIN	550/1240	525/1180	−135
	2:1**	30"dia x 0.750"t	200	100	SPIN FIN	600/1350	575/1300	−155
BC−12	Vertical	30"dia x 0.750"t	160	80	SPIN FIN	550/1240	525/1180	−135
	2:1	30"dia x 0.750"t	200	100	SPIN FIN	600/1350	575/1300	−155
BC−13	Vertical	30"dia x 0.750"t	160	80	SPIN FIN	550/1240	525/1180	−135
	2:1	30"dia x 0.750"t	200	100	SPIN FIN	600/1350	575/1300	−155
BC−14	Vertical	30"dia x 0.750"t	160	80	SPIN FIN	550/1240	525/1180	−135
	2:1	30"dia x 0.750"t	200	100	SPIN FIN	600/1350	575/1300	−155
BC−15	Vertical	30"dia x 0.750"t	160	80	SPIN FIN	550/1240	525/1180	−135
	2:1	30"dia x 0.750"t	200	100	SPIN FIN	600/1350	575/1300	−155
BC−16	Vertical	30"dia x 0.750"t	160	80	SPIN FIN	550/1240	525/1180	−135
	2:1	30"dia x 0.750"t	200	100	SPIN FIN	600/1350	575/1300	−155
BC−17	Vertical	30"dia x 0.750"t	160	80	SPIN FIN	550/1240	525/1180	−135
	2:1	30"dia x 0.750"t	200	100	SPIN FIN	600/1350	575/1300	−155
BC−18	Vertical	30"dia x 0.750"t	160	80	SPIN FIN	550/1240	525/1180	−135
	2:1	30"dia x 0.750"t	200	100	SPIN FIN	600/1350	575/1300	−155
BC−19	Vertical**	30"dia x 0.750"t	160	80	SPIN FIN	550/1240	525/1180	−135
	2:1**	30"dia x 0.750"t	200	100	SPIN FIN	600/1350	575/1300	−155
ADDITIVE ALTERNATE 'C'								
BC−20	Vertical	30"dia x 0.75"t	160	80	SPIN FIN	550/1240	525/1180	−135
	2:1	30"dia x 0.75"t	200	100	SPIN FIN	600/1350	575/1300	−155

** INDICATES PDA REQUIRED (SEE SPECIFICATION 02896)

NOTE: CUTTING SHOE SHALL BE APF OUTSIDE FLANGED OPEN CUTTING SHOE OR APPROVED EQUAL

SPIN FIN™ PILE IS A REGISTERED TRADEMARK OF PND ENGINEERS, INC.

REVISIONS

REV.	DATE	DESCRIPTION	DWN.	CKD.	APP.

PND ENGINEERS, INC.
9360 Glacier Highway, Ste. 100
Juneau, Alaska 99801
Phone: 907-586-2093
Fax: 907-586-2099
www.pndengineers.com

DESIGN: JDO CHECKED: CRS
DRAWN: GRD APPROVED: CRS
SCALE:

STATE OF ALASKA 49TH Charles R. Somerville CE-8845 REGISTERED PROFESSIONAL ENGINEER
DATE: 8/23/16

HAINES BOROUGH
PORTAGE COVE
HARBOR EXPANSION

SHEET TITLE: PILE SCHEDULE

PND PROJECT NO.: 102029.01

5.08

SHEET 25 OF 32

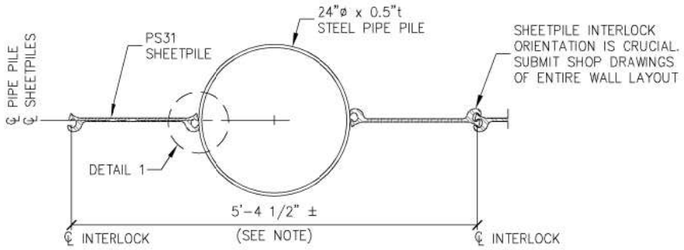

TYPICAL BARRIER PILE

NOTE:
IF DIMENSION VARIES SUBSTANTIALLY FROM THIS ESTIMATE DUE TO FIT-UP OF PROPOSED SHEETPILE, ADDITIONAL BARRIER PILES AND SHEETPILE MAY BE REQUIRED TO OBTAIN OVERALL DESIRED LENGTH OF WAVE BARRIER SHOWN.

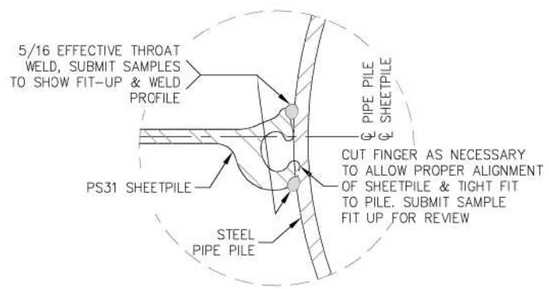

DETAIL 1

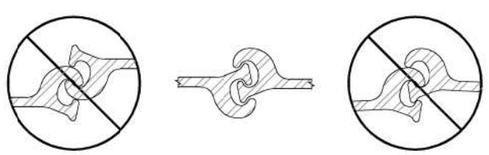

INCORRECT CORRECT INCORRECT

SHEETPILE INTERLOCK DETAILS

NOTE: ORIENTATION OF INTERLOCKS IS CRITICAL, VIEW SHOWN FROM TOP.

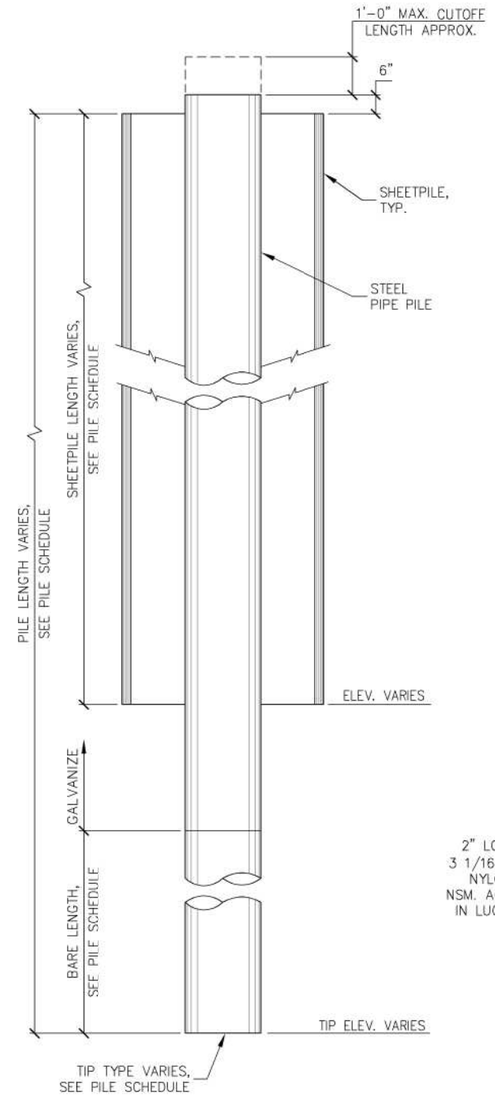

TYPICAL WAVE BARRIER PILE

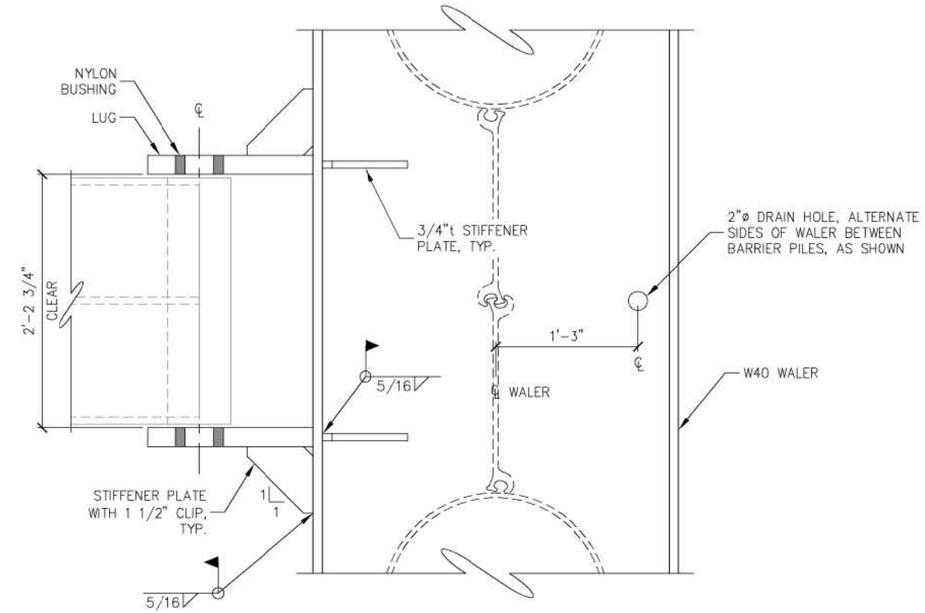

PLAN

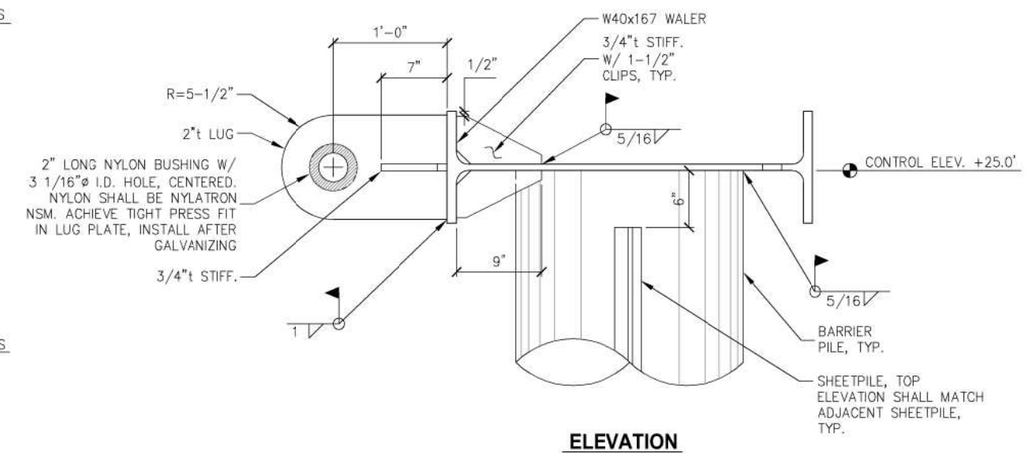

ELEVATION

WALER DETAILS

REVISIONS

REV.	DATE	DESCRIPTION	DWN.	CKD.	APP.

P N D ENGINEERS, INC.
9360 Glacier Highway, Ste. 100
Juneau, Alaska 99801
Phone: 907-586-2093
Fax: 907-586-2099
www.pndengineers.com

DESIGN: JDO CHECKED: CRS
DRAWN: GRD APPROVED: CRS
SCALE:

STATE OF ALASKA 49TH Charles R. Somerville CE-8845 REGISTERED PROFESSIONAL ENGINEER
DATE: 8/23/16

HAINES BOROUGH
PORTAGE COVE
HARBOR EXPANSION

SHEET TITLE:
BARRIER PILES AND WALERS

PND PROJECT NO.: 102029.01

5.09

SHEET 26 OF 32

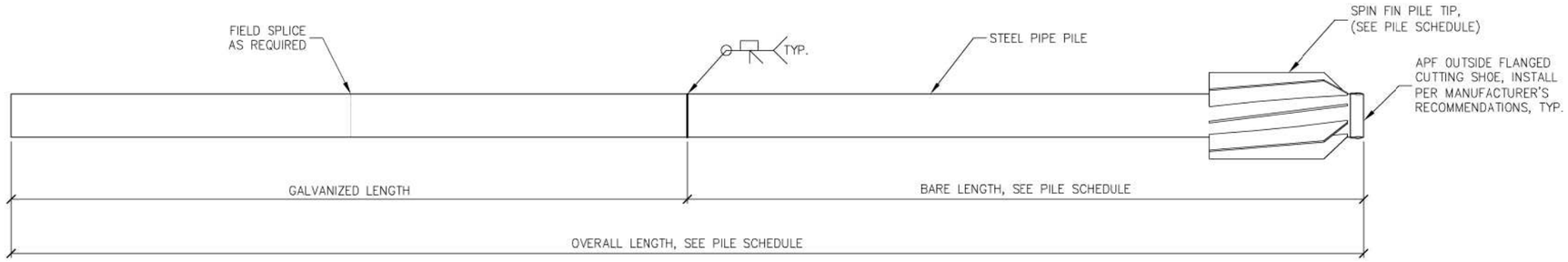

BEARING PILE
NTS

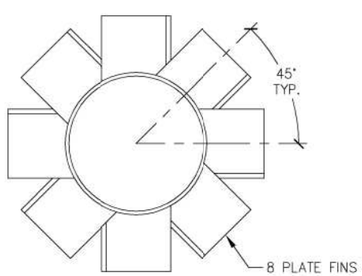

PLAN

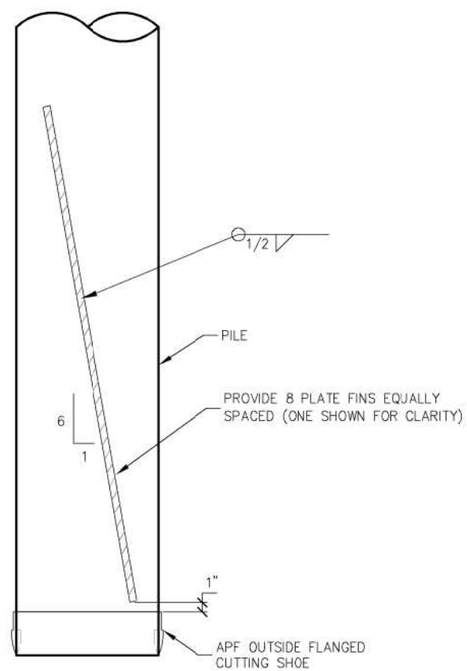

ELEVATION

SPIN FIN PILE TIP
NTS

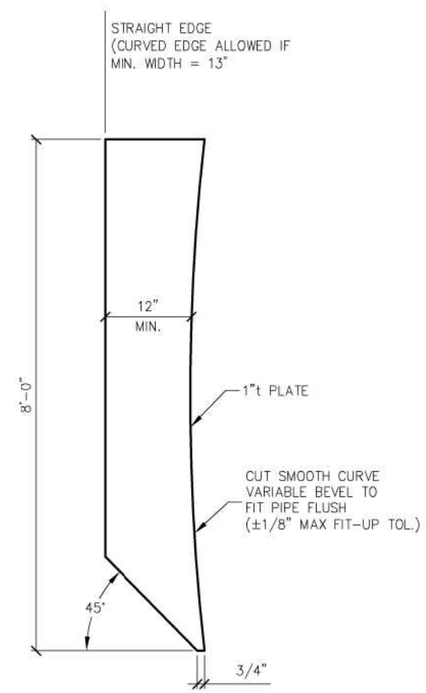

PLATE FIN
NTS

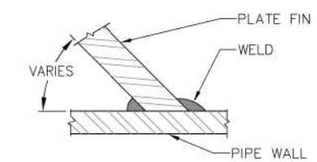

PILE/FIN SECTION
NTS

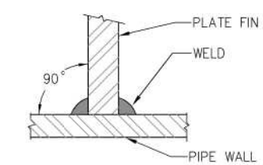

PILE/FIN SECTION AT CENTERLINE OF PLATE
NTS

SPIN FIN™ PILE IS A REGISTERED TRADEMARK OF PND ENGINEERS, INC.

REVISIONS

REV.	DATE	DESCRIPTION	DWN.	CKD.	APP.

PND ENGINEERS, INC.
9360 Glacier Highway, Ste. 100
Juneau, Alaska 99801
Phone: 907-586-2093
Fax: 907-586-2099
www.pndengineers.com

DESIGN: JDO CHECKED: CRS
DRAWN: GRD APPROVED: CRS
SCALE:

STATE OF ALASKA 49TH Charles R. Somerville CE-8845 REGISTERED PROFESSIONAL ENGINEER
DATE: 8/23/16

HAINES BOROUGH
PORTAGE COVE
HARBOR EXPANSION

SHEET TITLE: BEARING PILE DETAILS

PND PROJECT NO.: 102029.01

5.10

SHEET 27 OF 32

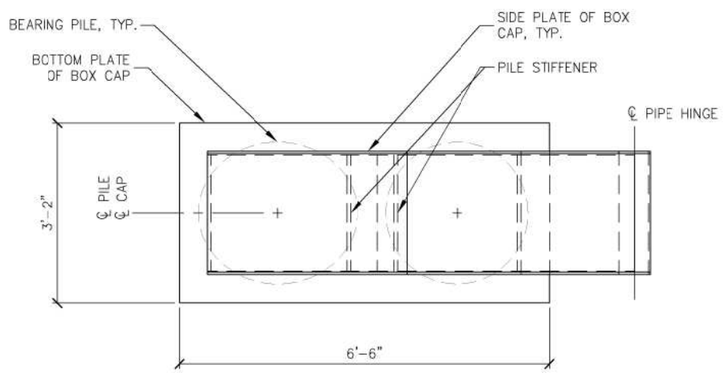

PLAN

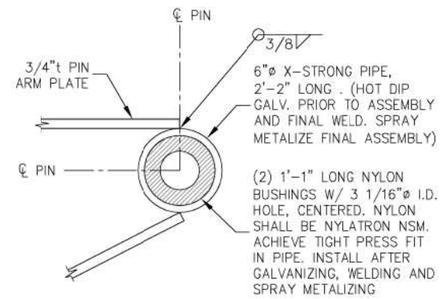

DETAIL

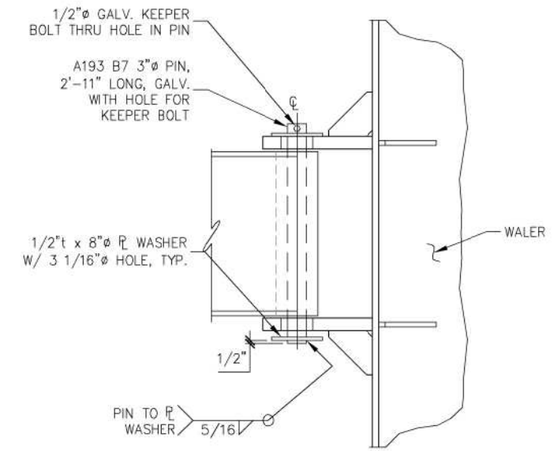

PIN CONNECTION PLAN

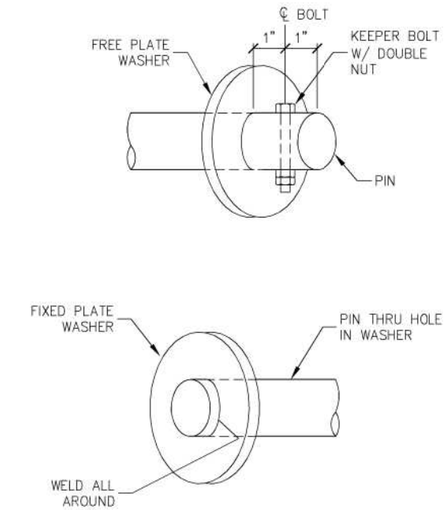

PIN CONNECTION DETAILS

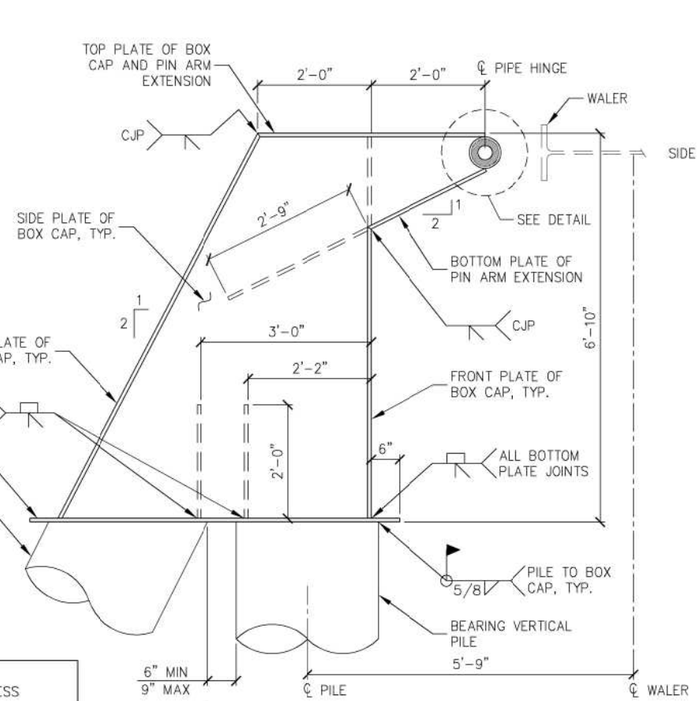

SIDE ELEVATION

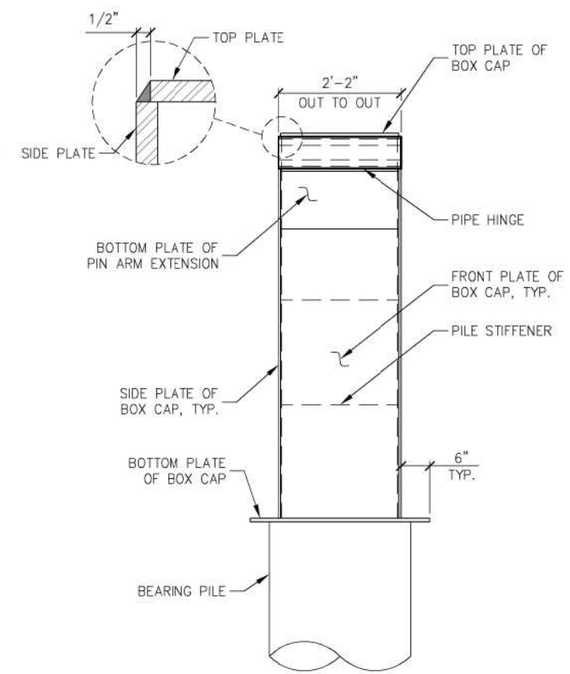

FRONT ELEVATION

BOX CAP

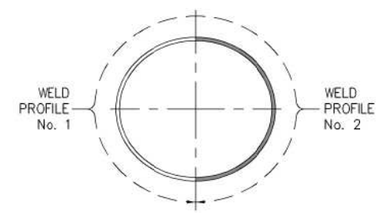

PLAN

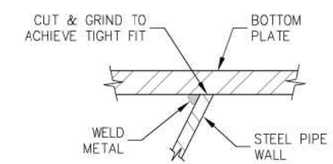

No 1 WELD PROFILE

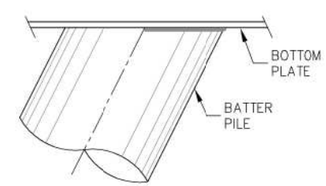

SIDE VIEW

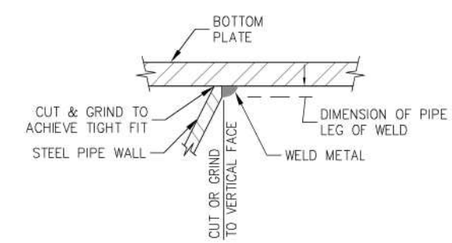

No 2 WELD PROFILE

BATTER PILE WELD
(ALL BATTER PILES)

NOTES:
1. ALL PLATE IS 3/4"t UNLESS OTHERWISE NOTED.
2. ALL OTHER WELDS ON BOX CAP NOT SHOWN SHALL BE 1/2" FILLET OR EQUIVALENT BEVEL, ALL AROUND.
3. SPRAY METALIZE BOX CAP AFTER FINAL SHOP ASSEMBLY OF STEEL COMPONENTS

REVISIONS

REV.	DATE	DESCRIPTION	DWN.	CKD.	APP.

P N D ENGINEERS, INC.
9360 Glacier Highway, Ste. 100
Juneau, Alaska 99801
Phone: 907-586-2093
Fax: 907-586-2099
www.pndengineers.com

DESIGN: JDO CHECKED: CRS
DRAWN: GRD APPROVED: CRS
SCALE:

STATE OF ALASKA 49TH Charles R. Somerville CE-8845 REGISTERED PROFESSIONAL ENGINEER
DATE: 8/23/16

HAINES BOROUGH
PORTAGE COVE
HARBOR EXPANSION

SHEET TITLE: BOX CAP DETAILS

PND PROJECT NO.: 102029.01

5.11

SHEET 28 OF 32

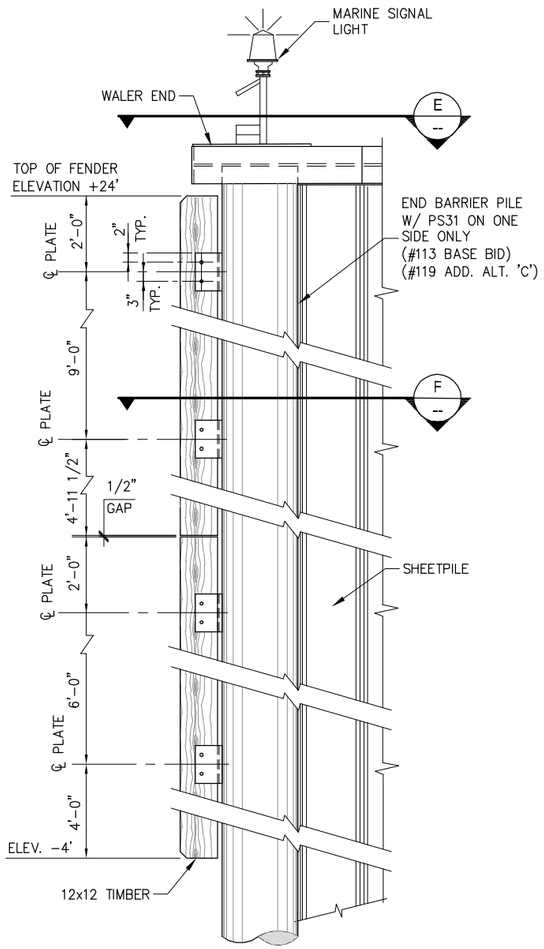

PARTIAL ELEVATION

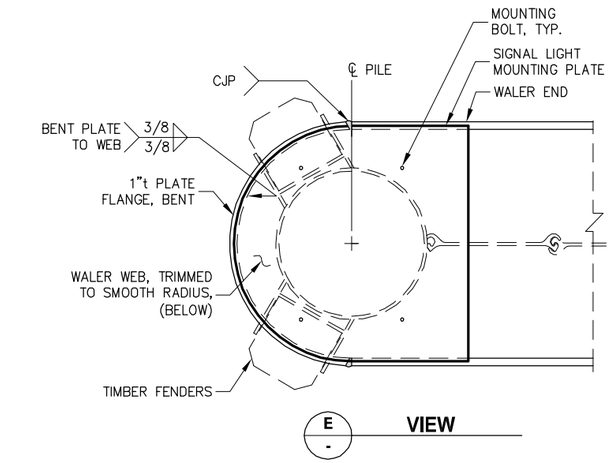

VIEW

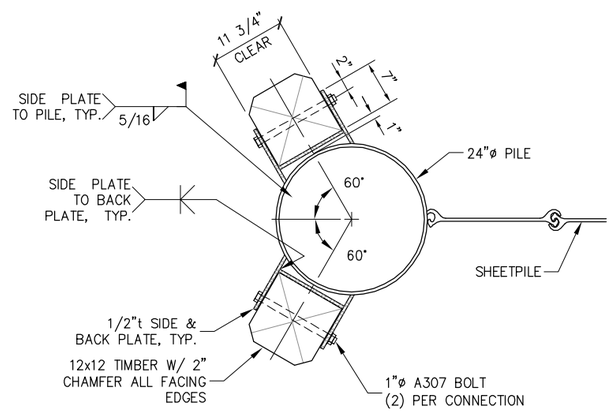

VIEW

FENDER

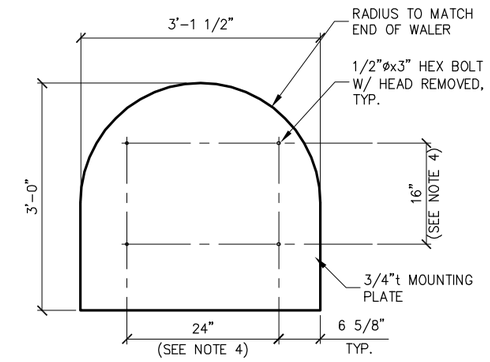

PLAN

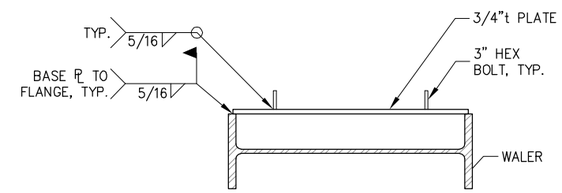

SECTION

SIGNAL LIGHT MOUNTING PLATE

MARINE SIGNAL LIGHT

SIGNAL LIGHT NOTES:

1) ALL METALS AND HARDWARE SHALL BE HOT DIP GALVANIZED PER ASTM A123 OR A153 AS APPROPRIATE.
2) BOLTS SHALL BE ASTM A325. STEEL PLATE SHALL BE A MINIMUM ASTM A36.
3) TIDELAND SIGNAL CORP. SOLA-CHAN MARINE SIGNAL LIGHT. ML-155 ON 4' PEDESTAL WITH 10W SOLAR MODULE OR APPROVED EQUAL , INCLUDING ON 12V SECONDARY ENERGY CELL AND MAXIFALO-60 LED FLASHER SET AT 0.4 SEC. "ON" AND 3.6 SEC. "OFF" (15 FLASHES/MINUTE) VISIBLE FOR MIN. 2 NM. COLOR AND FLASH PATTERN PER US COAST GUARD PERMIT REQUIREMENTS.
4) CENTER MARINE SIGNAL LIGHT ON BASE PLATE. CONTRACTOR TO VERIFY BOLT PATTERN AND SPACING ON LIGHT BASE.
5) ORIENT SOLAR PANEL FACING SOUTH.

FENDER NOTE:

ALL SAWN TIMBER SHALL BE S4S AND CONFORM TO COAST REGION DOUGLAS FIR NO.1, SELECT STRUCTURAL, OR BETTER ACCORDING TO WCLIB GRADING RULES, STANDARD NO.17 AND SHALL BE PRESSURE TREATED. TIMBER SHALL BE TREATED WITH CREOSOTE TO A MINIMUM NET RETENTION OF 20.0 POUNDS PER CUBIC FOOT PER AWPA C28. SAWN TIMBER COMPONENTS SHALL BE CUT, DRILLED, DAPPED AND SHAPED AS MUCH AS PRACTICAL BEFORE PRESSURE TREATING. ANY FIELD FABRICATION OR DAMAGE SHALL BE REPAIRED PER AWPA M4. FIELD DRILLED HOLES SHALL BE SWABBED WITH PRESERVATIVE PRIOR TO BOLT INSTALLATION. ALL ENDS, INCLUDING FIELD CUT ENDS, SHALL BE SEALED AFTER CUTTING WITH A SEALER AS RECOMMENDED BY THE TIMBER SUPPLIER AND AS APPROVED BY THE ENGINEER.

REVISIONS

REV.	DATE	DESCRIPTION	DWN.	CKD.	APP.

PND ENGINEERS, INC.
9360 Glacier Highway, Ste. 100
Juneau, Alaska 99801
Phone: 907-586-2093
Fax: 907-586-2099
www.pndengineers.com

DESIGN: JDO CHECKED: CRS
DRAWN: GRD APPROVED: CRS
SCALE:

STATE OF ALASKA 49TH Charles R. Somerville CE-8845 REGISTERED PROFESSIONAL ENGINEER
DATE: 8/23/16

HAINES BOROUGH
PORTAGE COVE
HARBOR EXPANSION

SHEET TITLE: FENDER AND MARINE SIGNAL LIGHT

PND PROJECT NO.: 102029.01

5.12

SHEET 29 OF 32

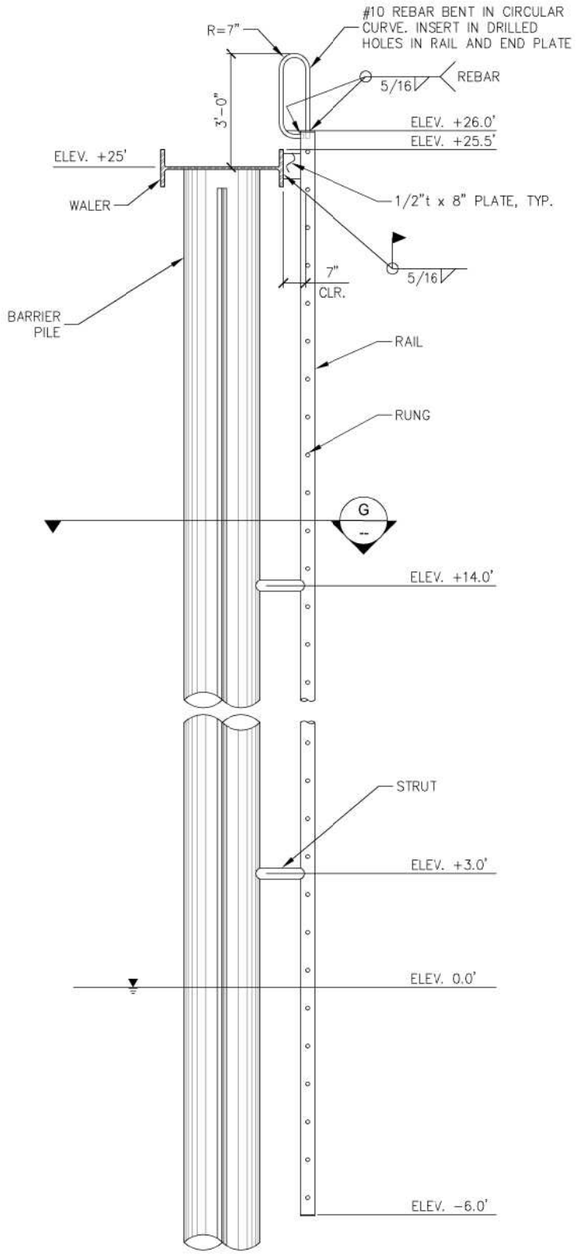

PROFILE

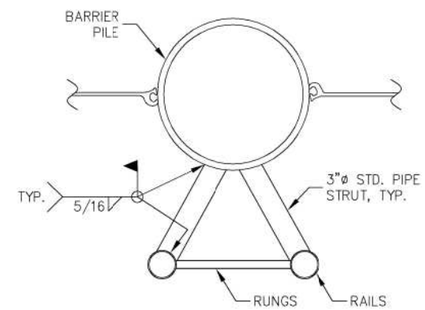

G **SECTION**

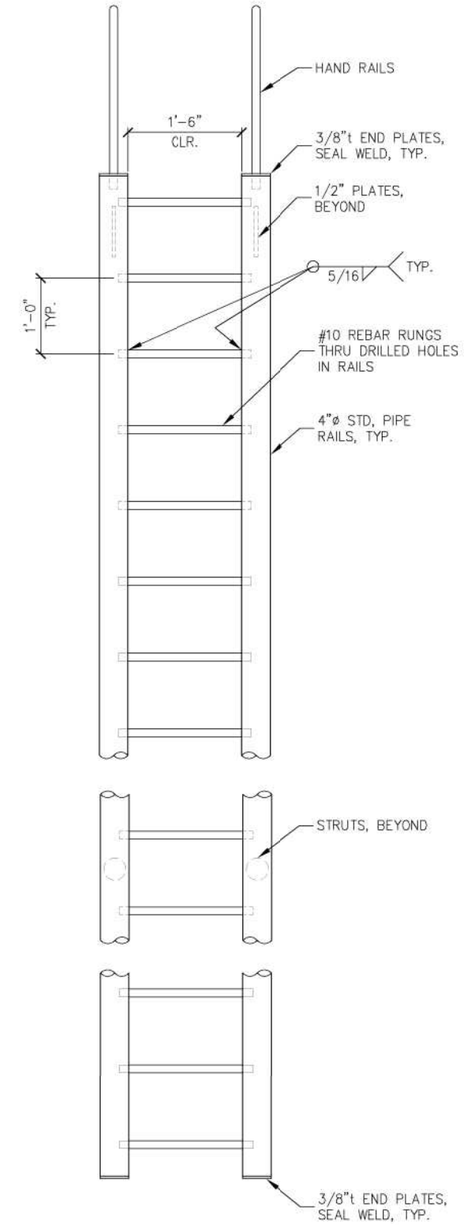

ELEVATION

REVISIONS

REV.	DATE	DESCRIPTION	DWN.	CKD.	APP.

PND ENGINEERS, INC.
9360 Glacier Highway, Ste. 100
Juneau, Alaska 99801
Phone: 907-586-2093
Fax: 907-586-2099
www.pndengineers.com

DESIGN: JDO CHECKED: CRS
DRAWN: GRD APPROVED: CRS
SCALE:

STATE OF ALASKA 49TH Charles R. Somerville CE-8845 REGISTERED PROFESSIONAL ENGINEER
DATE: 8/23/16

HAINES BOROUGH PORTAGE COVE HARBOR EXPANSION

SHEET TITLE: **LADDER**

PND PROJECT NO.: 102029.01

5.13

SHEET 30 OF 32

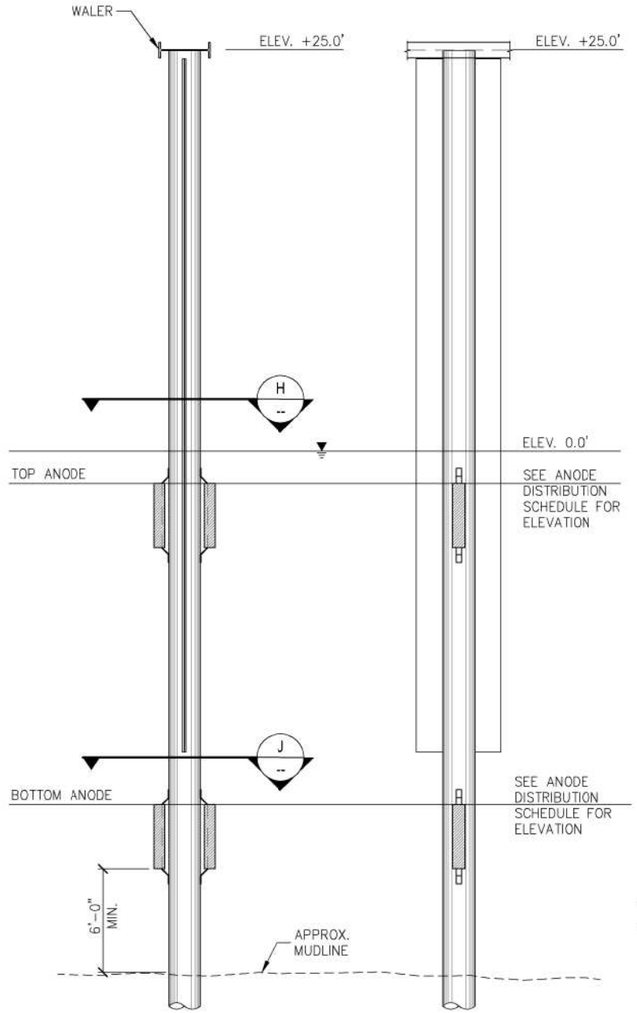

PROFILE

ELEVATION

BARRIER PILE ANODES

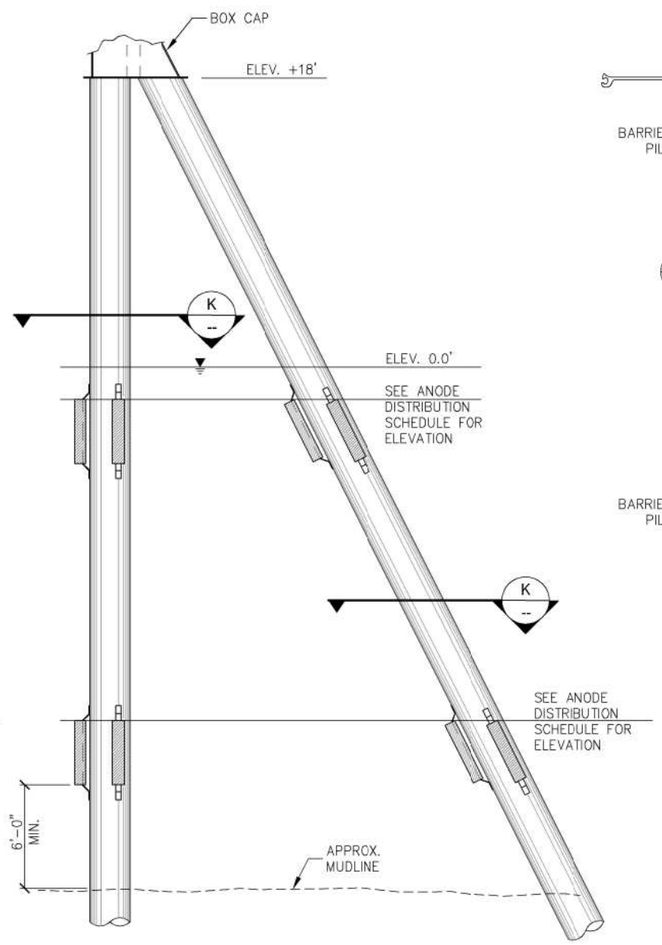

BEARING PILE CLUSTER ANODES

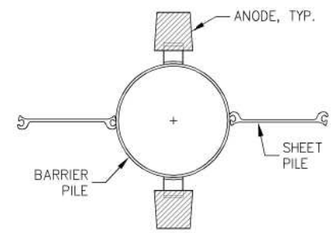

H - SECTION

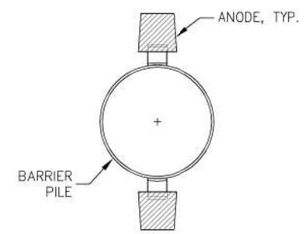

J - SECTION

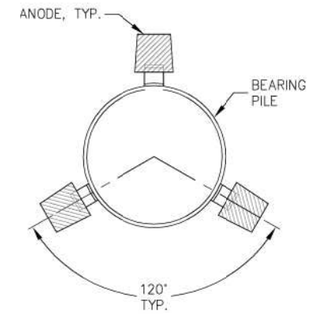

K - SECTION

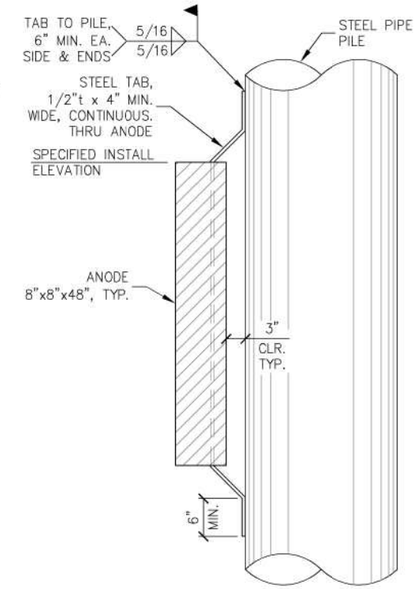

ANODE DETAIL

NOTE:
ANODES SHOWN ON TYPICAL SECTION VIEWS OF BARRIER PILE AND BEARING PILES FOR GENERAL ILLUSTRATION. QUANTITIES AND PLACEMENT ELEVATIONS VARY ALONG WALL. REFER TO ANODE DISTRIBUTION SCHEDULE FOR SPECIFICS.

ANODE DISTRIBUTION SCHEDULE

PILE DESIGNATION	TOP ANODES ELEV. (MLLW)	BOTTOM ANODES ELEV. (MLLW)
BARRIER PILES 1 TO 5	NA	NA
BARRIER PILES 6 TO 32 (EVEN ONLY)	−2.0'	NA
BARRIER PILES 34 TO 40 (EVEN ONLY)	−2.0'	−15.0'
BARRIER PILES 42 TO 46 (EVEN ONLY)	−2.0'	−16.0'
BARRIER PILES 48 TO 112 (EVEN ONLY)	−2.0'	−17.0'
* BARRIER PILES 114 TO 118 (EVEN ONLY)	−2.0'	−16.0'
BEARING PILE CLUSTER BC−1	NA	NA
BEARING PILE CLUSTERS BC−2 TO BC−5	−2.0'	NA
BEARING PILE CLUSTERS BC−6 TO BC−7	−2.0'	−15.0'
BEARING PILE CLUSTERS BC−8 TO BC−19	−2.0'	−17.0'
* BEARING PILE CLUSTER BC−20	−2.0'	−17.0'

* ADDITIVE ALTERNATE 'C' ONLY.

HAINES BOROUGH ALASKA

REVISIONS

REV.	DATE	DESCRIPTION	DWN.	CKD.	APP.

PND ENGINEERS, INC.
9360 Glacier Highway, Ste. 100
Juneau, Alaska 99801
Phone: 907-586-2093
Fax: 907-586-2099
www.pndengineers.com

DESIGN: JDO CHECKED: CRS
DRAWN: GRD APPROVED: CRS
SCALE:

STATE OF ALASKA 49TH Charles R. Somerville CE-8845 REGISTERED PROFESSIONAL ENGINEER
DATE: 8/23/16

HAINES BOROUGH
PORTAGE COVE
HARBOR EXPANSION

SHEET TITLE: PILE ANODES ADDITIVE ALTERNATE 'B'

PND PROJECT NO.: 102029.01

5.14

SHEET 31 OF 32

EXISTING NAV-AID STRUCTURE

EXISTING NAV-AID FOUNDATION

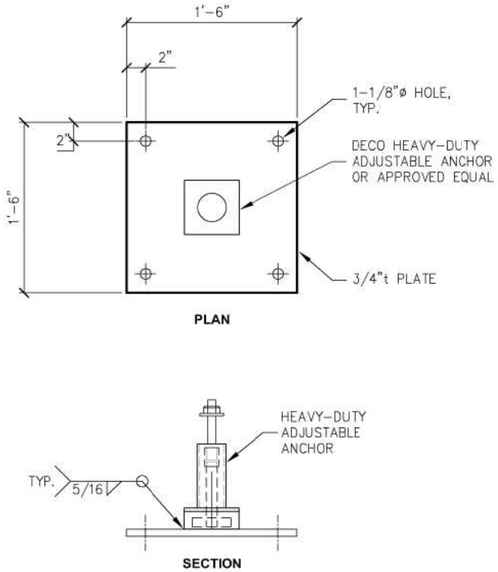

BASE PLATE

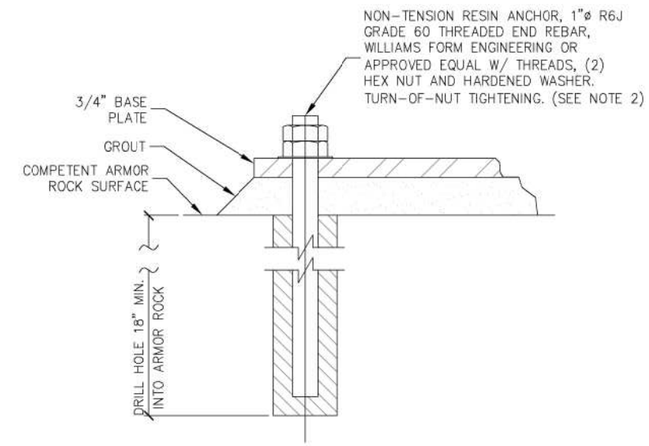

ROCK BOLT ANCHOR

NOT TO SCALE

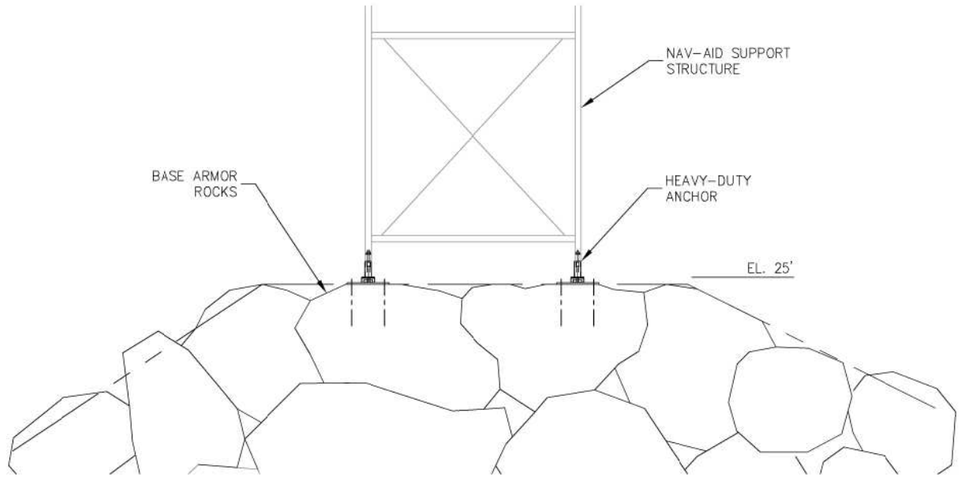

NAVIGATION AID ATTACHMENT

NOT TO SCALE

NAVIGATION STRUCTURE NOTES:

1) NAVIGATION AID BASE PLATES (4 EACH) SHALL BE PLACED ON ONE ARMOR ROCKS WHICH ARE SPECIALLY PLACED WITH A FLAT SIDE UP ORIENTATION. ARMOR ROCKS ON ALL SIDES SHALL BE PLACED TO PROVIDE MAXIMUM INTERLOCK AND STABILITY BETWEEN THE BASE AND THE ARMOR ROCK. NAVIGATION AID BASE PLATE SHALL BE HORIZONTAL, LEVEL AND SHALL BE ROCK BOLTED AND GROUTED INTO FLAT SIDE UP ARMOR ROCK.
2) RESIN ANCHORS SHALL BE EPOXY TYPE RESIN CARTRIDGES PER MANUFACTURER'S RECOMMENDATIONS. USE RESIN THE FULL LENGTH OF THE DRILL HOLE, CLEAN HOLE CAREFULLY BEFORE INSERTING RESIN. INSTALL IN STRICT COMPLIANCE WITH MANUFACTURER'S RECOMMENDATIONS.
3) BASE ARMOR ROCK SHALL BE MINIMUM NOMINAL DIMENSIONS 4'x4'x3'.
4) ALL METALS AND HARDWARE SHALL BE HOT DIP GALVANIZED PER ASTM A123 OR A153 AS APPROPRIATE.
5) BOLTS SHALL BE ASTM A325. STEEL PLATE SHALL BE A MINIMUM ASTM A36.
6) GROUT SHALL BE PLACED PER MANUFACTURER'S RECOMMENDATIONS. GROUT SHALL BE NON-CORROSIVE, NON-METALLIC, CEMENT BASED GROUT MEETING ASTM C-1107, GRADE C, MEET THE REQUIREMENTS OF ASTM 520, AND DEVELOP A 28 DAY COMPRESSIVE STRENGTH OF 9,000 PSI.
7) SIZE OF HEAVY DUTY ADJUSTABLE ANCHOR SHALL MATCH BOLT SIZE AND THREAD OF EXISTING ANCHOR.
8) REMOVE EXISTING NAV-AID STRUCTURE, CLEAN, REPLACE EXISTING THREADED ROD WITH NEW AND RESTORE ON NEW FOUNDATION AT SAME LOCATION AND ORIENTATION, SOLAR PANEL FACING SOUTH.
9) APPLY ANTI-SEIZE COMPOUND TO THREADED ROD.

HAINES BOROUGH ALASKA

REVISIONS

REV.	DATE	DESCRIPTION	DWN.	CKD.	APP.

P N D ENGINEERS, INC.
9360 Glacier Highway, Ste. 100
Juneau, Alaska 99801
Phone: 907-586-2093
Fax: 907-586-2099
www.pndengineers.com

DESIGN: JDO CHECKED: CRS
DRAWN: GRD APPROVED: CRS
SCALE: AS SHOWN

STATE OF ALASKA 49TH Charles R. Somerville CE-8845 REGISTERED PROFESSIONAL ENGINEER
DATE: 8/23/16

HAINES BOROUGH
PORTAGE COVE
HARBOR EXPANSION

SHEET TITLE: NAVIGATION STRUCTURE DETAILS

PND PROJECT NO.: 102029.01

5.15

SHEET 32 OF 32