HAINES BOROUGH, ALASKA

PORT CHILKOOT DOCK RENOVATION - PHASE 2: PLAN SET A

LETNIKOF COVE HARBOR REFURBISHMENT: PLAN SET B

PND ENGINEERS, INC.

9360 Glacier Highway Suite 100
Juneau, Alaska 99801

Phone: 907-586-2093
Fax: 907-586-2099
www.pndengineers.com

65% DESIGN REVIEW SUBMITTAL

DECEMBER 7, 2012

H:\11XXX\112091 Letnikof Cove Harbor Scoping\Drawings\PND\0.00 Master Cover Sheet.dwg, 12/7/2012 12:03:14 PM, 1:2

HAINES BOROUGH, ALASKA

PORT CHILKOOT DOCK IMPROVEMENTS PHASE 2

LOCATION MAP

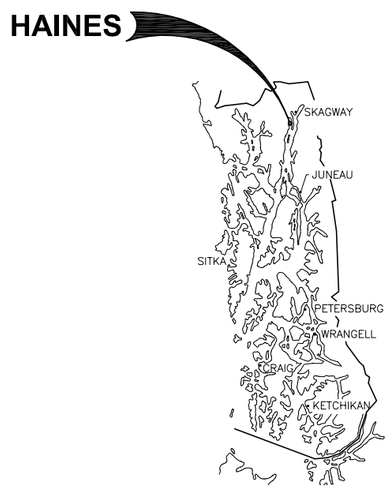

SOUTHEAST ALASKA

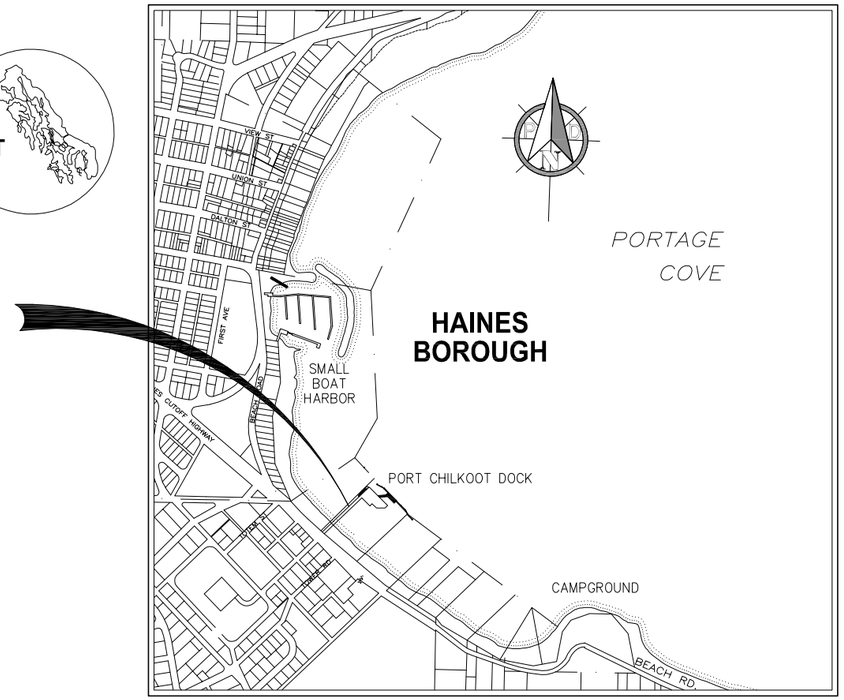

VICINITY MAP

SCALE (FEET)

0 500 1000

PLAN SET A DRAWING INDEX

SHEET NO.	DWG. NO.	TITLE
1 OF 48	A1.01	COVER SHEET, VICINITY MAP AND DRAWING INDEX
2 OF 48	A1.02	GENERAL NOTES
3 OF 48	A1.03	EXISTING CONDITIONS, SURVEY CONTROL AND TEST HOLE LOCATIONS
4 OF 48	A1.04	STANDARD BOREHOLE LOG DETAILS
5 OF 48	A1.05	STANDARD BOREHOLE LOG DETAILS
6 OF 48	A1.06	BOREHOLE LOGS
7 OF 48	A1.07	BOREHOLE LOGS
8 OF 48	A1.08	BOREHOLE LOGS
9 OF 48	A1.09	BOREHOLE LOGS
10 OF 48	A1.10	BOREHOLE LOGS
11 OF 48	A1.11	BOREHOLE LOGS
12 OF 48	A1.12	OVERALL DEMOLITION PLAN
13 OF 48	A1.13	GANGWAY AND GANGWAY LANDING DEMOLITION PLAN
14 OF 48	A1.14	ABUTMENT DEMOLITION PLAN
15 OF 48	A1.15	CRUISE SHIP APPROACH DOCK DEMOLITION PLAN
16 OF 48	A2.01	SITE PLAN
17 OF 48	A2.02	ABUTMENT PLAN AND RETAINING WALL ELEVATIONS
18 OF 48	A2.03	ABUTMENT SECTION
19 OF 48	A2.04	TRESTLE FOUNDATION AND FRAMING PLANS
20 OF 48	A2.05	RAMP ELEVATION AT TRESTLE ABUTMENT
21 OF 48	A2.06	GANGWAY QUEUING AREA FOUNDATION AND FRAMING PLANS
22 OF 48	A2.07	CRUISE SHIP APPROACH DOCK FOUNDATION AND FRAMING PLANS
23 OF 48	A3.01	FRAMING DETAILS
24 OF 48	A3.02	FRAMING DETAILS
25 OF 48	A3.03	FRAMING DETAILS
26 OF 48	A3.04	PILE CAP DETAILS
27 OF 48	A3.05	PILE CAP DETAILS
28 OF 48	A3.06	FRAMING DETAILS
29 OF 48	A3.07	GUARDRAIL AND BULLRAIL DETAILS
30 OF 48	A3.08	ELECTRICAL PANEL AND LIGHT POLE MOUNTING DETAILS
31 OF 48	A3.09	PILE SCHEDULE AND DETAILS
32 OF 48	A4.01	GANGWAY AND FLOATING DOCK PLAN AND ELEVATION
33 OF 48	A4.02	GANGWAY FRAMING PLAN AND ELEVATION
34 OF 48	A4.03	GANGWAY TYPICAL SECTION AND DETAILS
35 OF 48	A4.04	GANGWAY LIFTING BRACKET DETAILS
36 OF 48	A4.05	GANGWAY SKID END DETAILS
37 OF 48	A4.06	GANGWAY HINGE END DETAILS
38 OF 48	A4.07	GANGWAY HINGE END DETAILS
39 OF 48	A4.08	GANGWAY END ELEVATIONS
40 OF 48	A4.09	PILE FRAME DETAILS
41 OF 48	A5.01	EXISTING FLOATING DOCK FRAMING PLAN AND SECTION
42 OF 48	A5.02	FLOAT MODIFICATION PLAN
43 OF 48	A5.03	FLOATING DOCK DETAILS
44 OF 48	A5.04	FLOATING DOCK DETAILS
45 OF 48	A5.05	FLOATING DOCK DETAILS
46 OF 48	A5.06	FLOATING DOCK DETAILS
47 OF 48	A5.07	FLOATING DOCK DETAILS
48 OF 48	A6.01	WATER LINE PLAN AND DETAILS

PROJECT SCHEDULE

DESCRIPTION	SCHEDULE
1. IN-WATER WORK RESTRICTIONS: NO WORK ACTIVITY ALLOWED BELOW THE TIDAL ELEVATION.	APRIL 1 – JUNE 15, ANY YEAR
2. EARLIEST ALLOWED FIELD START	AUGUST 15, 2013
3. SUBSTANTIAL COMPLETION	JUNE 2, 2014
4. FINAL COMPLETION OF ALL WORK UNDER THIS CONTRACT	JULY 1, 2014

NOTE: COORDINATE ALL WORK AROUND CRUISE SHIP SCHEDULE PER SECTION 01010.

TIDAL INFORMATION

HIGH TIDE LINE (HTL)	21.2
MEAN HIGH WATER (MHW)	15.8
MEAN LOWER LOW WATER (MLLW)	0.0'
EXTREME LOW WATER (ELW) ESTIMATED	−5.0'

PND ENGINEERS, INC. (PND) IS NOT RESPONSIBLE FOR SAFETY PROGRAMS, METHODS OR PROCEDURES OF OPERATION, OR THE CONSTRUCTION OF THE DESIGN SHOWN ON THESE DRAWINGS. DRAWINGS ARE FOR THE USE OF THIS PROJECT ONLY AND ARE NOT INTENDED FOR REUSE WITHOUT WRITTEN APPROVAL FROM PND. DRAWINGS ARE ALSO NOT TO BE USED IN ANY MANNER THAT WOULD CONSTITUTE A DETRIMENT DIRECTLY OR INDIRECTLY TO PND.

65% DESIGN REVIEW SUBMITTAL

REVISIONS

REV.	DATE	DESCRIPTION	DWN.	CKD.	APP.

PND ENGINEERS, INC.
9360 Glacier Highway Ste 100
Juneau, Alaska 99801
Phone: 907-586-2093
Fax: 907-586-2099
www.pndengineers.com

DESIGN: SRY CHECKED: CRS
DRAWN: SRY APPROVED: CRS
SCALE: AS SHOWN
DATE: 12/7/12

HAINES BOROUGH
PORT CHILKOOT DOCK IMPROVEMENTS - PHASE 2

SHEET TITLE: COVER SHEET, VICINITY MAP AND DRAWING INDEX

PND PROJECT NO.: 112048.04 DWG. FILE: 1.01.DWG

A1.01

SHEET 1 OF 48

N:\11XXX\112048 Port Chilkoot Dock Trestle Replacement\Drawings\PND\1.01 - Cover Sheet.dwg, 12/7/2012 11:55:49 AM, 1:2

ABBREVIATIONS

A	
@	AT
AC	ASBESTOS CEMENT PIPE
ACP	ASPHALT CONCRETE PAVEMENT
ADJ	ADJUSTABLE
APF	ASSOCIATED PILE AND FITTING CORP.
APPROX.	APPROXIMATE
ATS	ALASKA TIDELANDS SURVEY
AV	AIR RELEASE VALVE
B	
BFV	BUTTERFLY VALVE
BLDG	BUILDING
BOP	BEGINNING OF PROJECT
BTM,BOT	BOTTOM
C	
C&G	CURB & GUTTER
CB	CATCH BASIN
CI	CAST IRON
CIP	CAST-IN-PLACE
CJ	CONTROL JOINT
℄	CENTER LINE
CLR	CLEAR
CMP	CORRUGATED METAL PIPE
CO	CLEANOUT
C.O.E.	CORPS OF ENGINEERS
CONC.	CONCRETE
CP	COMPLETE PENETRATION
CPP	CORRUGATED POLYETHYLENE PIPE
COR	CORNER
CSC	COUNTERSINK
CTR	CENTER
CY	CUBIC YARD
D	
DCP	DISSIMILAR PIPE COUPLING
D/DIA	DIAMETER
DBL	DOUBLE
DL	DEAD LOAD
DIP	DUCTILE IRON PIPE
DIM	DIMENSION
DN	DOWN
DTL	DETAIL
E	
E	EAST
EA.	EACH
EJ	EXPANSION JOINT
EL/ELEV	ELEVATION
EOP	END OF PROJECT
EQ	EQUAL
EQUIP	EQUIPMENT
EST	ESTIMATE
EXC	EXCAVATE
EXIST	EXISTING
F	
FC	FACE OF CURB
FD	FLOOR DRAIN
FF	FINISHED FLOOR
FH	FIRE HYDRANT, FLAT HEAD
FIN	FINISH (ED)
FM	FORCE MAIN SEWER
FND	FOUNDATION
FT	FOOT
FTG	FOOTING
FL	FLOWLINE
G	
GAL	GALLON
GALV	GALVANIZED
GB	GRADE BREAK
GPM	GALLONS PER MINUTE
GRD	GROUND
GV	GATE VALVE
H	
H&T	HUB & TACK
HD	HEAVY DUTY
HDG	HOT-DIPPED GALVANIZED
HDPE	HIGH DENSITY POLYETHYLENE
HORIZ	HORIZONTAL
HSE	HOUSE
HT	HEIGHT
HWY.	HIGHWAY
I	
ID	INSIDE DIAMETER
IE	INVERT ELEVATION
IN	INCH
IP	IRON PIPE
INCL	INCLUDE (D) (ING)
INSUL	INSULATE (D) (ION)
INV	INVERT
J	
JB	JUNCTION BOX
L	
LBS	POUNDS
LF	LINEAR FEET
LL	LIVE LOAD
LOC	LOCATION
LS	LUMP SUM
M	
MAX	MAXIMUM
MECH	MECHANICAL
MFR	MANUFACTURE (R)
MH	MANHOLE
MJ	MECHANICAL JOINT
MI	MALLEABLE IRON
MIN	MINIMUM
MLLW	MEAN LOWER LOW WATER
MSF	1000 SQUARE FEET
MSE	MECHANICALLY STABILIZED EARTH
MTL	MATERIAL (S)
N	
N	NORTH
NFS	NON FROST SUSCEPTIBLE
NIC	NOT IN CONTRACT
NO	NUMBER
NTS	NOT TO SCALE
O	
OBD	OVERBURDEN
OC	ON CENTER
OD	OUTSIDE DIAMETER
OG	ORIGINAL GROUND
OHE	OVERHEAD ELECTRICAL
OWS	OIL-WATER SEPARATOR
OPP	OPPOSITE
P	
P	PIPE
PC	POINT OF CURVATURE, PIECE
PCC	PRECAST CONCRETE
PED	PEDESTAL
PER	PERIMETER
PERF	PERFORATE (D)
PI	POINT OF INTERSECTION
PLWD	PLYWOOD
PL	PROPERTY LINE, PLATE
PROJ	PROJECT
PRV	PRESSURE REDUCING VALVE
PSI	POUND PER SQUARE INCH
PT	POINT, PRESSURE TREATED, POINT OF TANGENCY
PVC	POINT OF VERTICAL CURVATURE, POLY VINYL CHLORIDE
Q	
QTY	QUANTITY
R	
RAD	RADIUS
RE	RIM ELEVATION
REF	REFERENCE
REINF	REINFORCEMENT
REQD	REQUIRED
RET	RETAINING
RO	ROUGH OPENING
ROW	RIGHT OF WAY
S	
S	SOUTH
SCHED	SCHEDULE
SD	STORM DRAIN
SDI	STORM DRAIN INLET STRUCTURE
SDO	STORM DRAIN OUTLET STRUCTURE
SDR	STANDARD DIMENSION RATIO
SF	SQUARE FOOT
SHLDR	SHOULDER
SI	STREET INTERSECTION
SPEC	SPECIFICATION (S)
SQ	SQUARE
SSC	SANITARY SEWER CONNECTION
SS	STAINLESS STEEL, SANITARY SEWER
SDMH	STORM DRAIN MANHOLE
SSMH	SANITARY SEWER MANHOLE
STA	STATION
STD	STANDARD
STL	STEEL
STRG	STRONG
SW	SIDEWALK
SWR	SEWER
SY	SQUARE YARD
SYM	SYMMETRICAL
T	
t	THICK
T&B	TOP AND BOTTOM
T&G	TONGUE AND GROOVE
TBC	TOP BACK OF CURB
TBD	TO BE DETERMINED
TBM	TEMPORARY BENCH MARK
TD	TRENCH DRAIN
TEL	TELEPHONE
TEMP	TEMPERATURE, TEMPORARY
TH	TEST HOLE
THK	THICK
TRANS	TRANSVERSE
TV	TELEVISION
TYP	TYPICAL
U	
UBC	UNIFORM BUILDING CODE
UE	UNDERGROUND ELECTRIC
UMC	UNIFORM MECHANICAL CODE
UHMW	ULTRA HIGH MOLECULAR WEIGHT
UON	UNLESS OTHERWISE NOTED
UPC	UNIFORM PLUMBING CODE
V	
VB	VALVE BOX
VERT	VERTICAL
W	
W	WEST
W/	WITH
WD	WOOD
WELDMT	WELDMENT
WL	WATERLINE
WV	WATER VALVE
W/O	WITHOUT
X	
XFMR	TRANSFORMER
<PT	ANGLE POINT

GENERAL NOTES - CIVIL

1. CONTRACTOR SHALL INSTALL TEMPORARY DEVICES CONSISTING OF BUT NOT LIMITED TO STRAW BALES, FILTER FABRIC FENCES, SETTLING POND, ETC., TO PROHIBIT SILT LADEN DEWATERING EFFLUENT AND OTHER CONSTRUCTION RUNOFF FROM ENTERING ADJACENT STREAMS OR WATER BODIES. CONTRACTOR IS RESPONSIBLE FOR THE QUALITY OF THE DEWATERING EFFLUENT AND OTHER CONSTRUCTION RUNOFF THAT ENTERS ADJACENT STREAMS OR WATER BODIES AND IS, THEREFORE, RESPONSIBLE FOR VIOLATIONS AND PENALTIES FROM HIS OPERATIONS.
2. PROPERTY DISTURBED DURING CONSTRUCTION SHALL BE RESTORED TO ITS PRE-CONSTRUCTION CONDITION OR BETTER AT NO ADDITIONAL COST.
3. EXISTING UTILITIES & DRAIN PIPE LOCATIONS ARE DERIVED FROM FIELD LOCATES. ACTUAL LOCATIONS MAY VARY FROM THOSE SHOWN. CALL FOR ALL UTILITY LOCATES BEFORE YOU DIG.

WATER AND WASTE MATERIAL	(907) 766-2237 OR 766-2200
POWER AND LIGHT (AP&T)	(907) 766-2331
CATV	(907) 766-2137
TELEPHONE (GTE)	(907) 766-2311

4. GRADING AND ALIGNMENT OF STRUCTURES & FINAL SURFACING ARE SUBJECT TO MINOR REVISIONS BY THE ENGINEER TO FIT SITE CONDITIONS. GRADE ALL IMPROVEMENTS WITH POSITIVE DRAINAGE AWAY FROM STRUCTURES.
5. PROPERTY AND MEANDER LINES ON THESE DRAWINGS ARE SHOWN APPROXIMATE.
6. THE CONTRACTOR SHALL NOTIFY THE HAINES BOROUGH WATER AND SEWER DEPARTMENT AT 766-2200 OF PROPOSED WATER OR SEWER SERVICE INTERRUPTION AT LEAST 48 HOURS PRIOR TO SHUTDOWN.

GENERAL NOTES - STRUCTURAL

DESIGN PARAMETERS

THE FOLLOWING DESIGN CODES AND STANDARDS ARE APPLICABLE AND CONSIDERED PART OF THIS SPECIFICATION: AISC CODE OF STANDARD PRACTICE FOR STEEL BUILDINGS AND BRIDGES, AWS STRUCTURAL WELDING CODE D1.1, ACI 318 AND 301, ALUMINUM DESIGN MANUAL 2005, AND ASHTO STANDARD SPACIFICATION FOR HIGHWAY BRIDGES.

DOCK LIVE LOAD:	ASSHTO HS20-44 TRUCK 100 PSF UNIFORM LOAD 10 TON FORKLIFT (35,500 AXLE LOAD)
GANGWAY LIVE LOAD:	60 PSF UNIFORM LOAD

65% DESIGN REVIEW SUBMITTAL

REVISIONS

REV.	DATE	DESCRIPTION	DWN.	CKD.	APP.

PND ENGINEERS, INC.
9360 Glacier Highway Ste 100
Juneau, Alaska 99801
Phone: 907-586-2093
Fax: 907-586-2099
www.pndengineers.com

DESIGN: SRY CHECKED: CRS
DRAWN: SRY APPROVED: CRS
SCALE: NTS
DATE: 12/7/12

HAINES BOROUGH
PORT CHILKOOT DOCK
IMPROVEMENTS - PHASE 2

SHEET TITLE: GENERAL NOTES

PND PROJECT NO.: 112048.04 DWG. FILE: 1.02.DWG

A1.02

N:\11XXX\112048 Port Chilkoot Dock Trestle Replacement\Drawings\PND\1.02 - General Notes.dwg, 12/7/2012 11:55:45 AM, 1:2

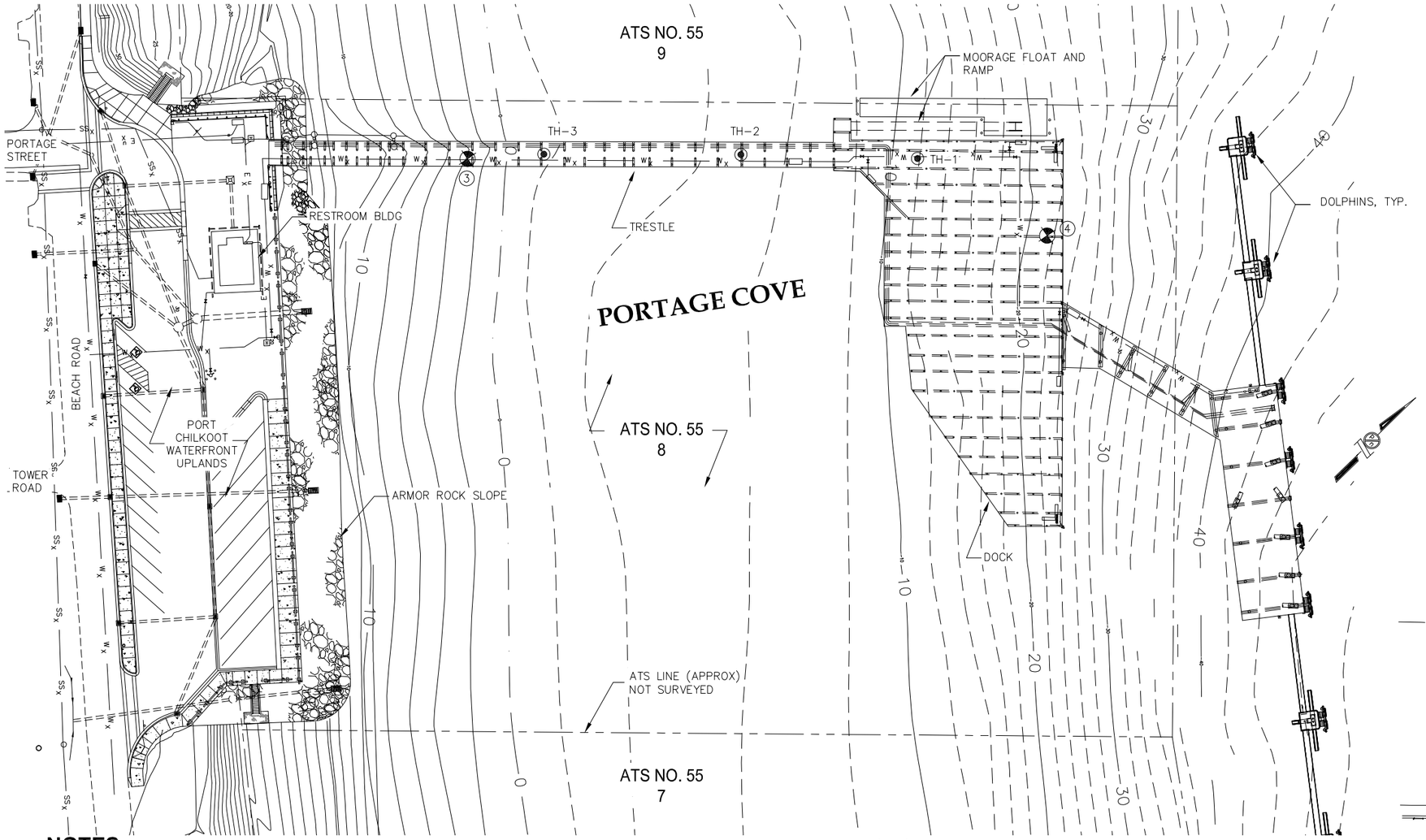

1 EXISTING CONDITIONS

SCALE (FEET) 0 40 80

LEGEND

- PROPERTY LINE (NOT SURVEYED)
- SURVEY CONTROL POINT
- SANITARY SEWER
- WATER
- CABLE UTILITY LINE (UNDERGROUND)
- ELECTRIC UTILITY LINE (UNDERGROUND)
- TELEPHONE UTILITY LINE (UNDERGROUND)
- STORM SEWER PIPE
- SANITARY SEWER MANHOLE
- WATER VALVE
- FIRE HYDRANT
- LIGHT POLE
- STORM DRAIN INLET
- TEST HOLE LOCATION

NOTES

1. SURVEY WAS CONDUCTED IN JULY 2011.
2. HORIZONTAL CONTROL IS ON A LOCAL SYSTEM.
3. VERTICAL DATUM FOR THIS SURVEY IS MLLW = 0.0'. THE BASIS OF VERTICAL CONTROL WAS ESTABLISHED HOLDING BENCHMARK "HH-1" AS 25.93 FEET. BENCHMARK "HH-1" IS A U.S.A.C.E. BRASS CAP LOCATED NEAR A WEATHER STATION ON THE NORTH SIDE SPIT OF HAINES HARBOR.
4. SEE U.S.A.C.E CONDITION SURVEY DRAWING TITLED "HAINES HARBOR CONDITION SURVEY, MAY 16, 2000."
5. UPLANDS INFORMATION IS SHOWN FROM DESIGN DOCUMENTS AND DOES NOT REPRESENT SURVEYED INFORMATION. SEE PND #092014 FOR ALL DESIGN DRAWINGS RELATED TO PORT CHILKOOT WATERFRONT PROJECT.
6. ALL SOIL SAMPLES VISUALLY CLASSIFIED IN ACCORDANCE WITH THE UNIFIED SOIL CLASSIFICATION SYSTEM, ASTM D 2488, STANDARD PRACTICE FOR DESCRIPTION AND IDENTIFICATION OF SOILS (VISUAL-MANUAL PROCEDURE).
7. DESCRIPTIONS OF THE SOILS WITHIN THESE TEST PITS APPLY ONLY AT THE SPECIFIC LOCATIONS AT THE TIME THE TEST PITS WERE EXCAVATED. THEY ARE NOT WARRANTED TO BE REPRESENTATIVE OF SUBSURFACE CONDITIONS AT OTHER LOCATIONS OR TIMES.

SURVEY CONTROL

POINT	NORTHING	EASTING	ELEV.	DESCRIPTION
1	16922.66	10678.81	38.77	USS 2716 MON IN SIDEWALK
2	17054.68	10479.89	50.48	ADOT&PF BRASS CAP IN ROAD
3	16773.23	11172.11	34.52	MAGNAIL IN TRESTLE DECK
4	17007.76	11470.76	34.11	MAGNAIL IN DOCK DECK

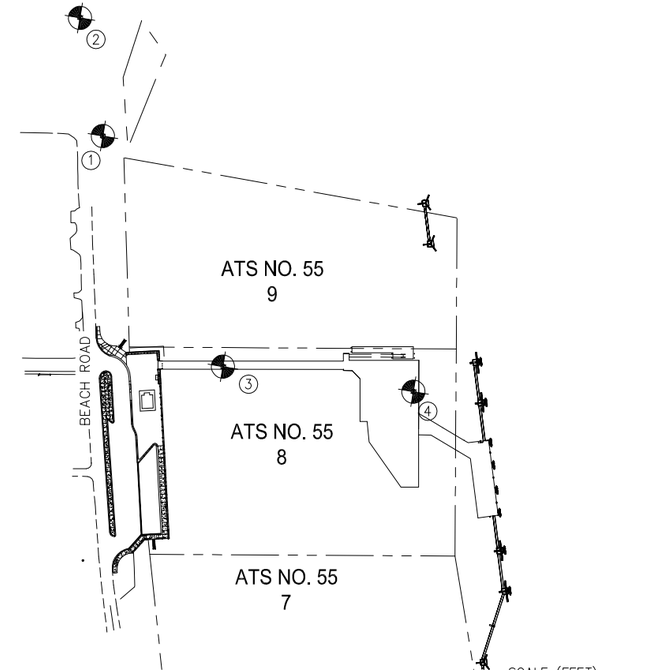

2 SURVEY CONTROL MAP

SCALE (FEET) 0 150 300

65% DESIGN REVIEW SUBMITTAL

HAINES BOROUGH ALASKA

REVISIONS

REV.	DATE	DESCRIPTION	DWN.	CKD.	APP.

PND ENGINEERS, INC.
9360 Glacier Highway Ste 100
Juneau, Alaska 99801
Phone: 907-586-2093
Fax: 907-586-2099
www.pndengineers.com

DESIGN: SRY CHECKED: CRS
DRAWN: SRY APPROVED: CRS
SCALE: AS NOTED
DATE: 12/7/12

HAINES BOROUGH
PORT CHILKOOT DOCK IMPROVEMENTS - PHASE 2

SHEET TITLE: EXISTING CONDITIONS, SURVEY CONTROL AND TEST HOLE LOCATIONS

PND PROJECT NO.: 112048.04 DWG. FILE: 1.03.DWG

A1.03

SHEET 3 OF 48

H:\11XXX\112048 Port Chilkoot Dock Trestle Replacement\Drawings\PND\1.03 - Existing Conditions, Survey Control and Test Hole Locations.dwg, 12/7/2012 11:55:53 AM,
1:2

SOILS CLASSIFICATION, CONSISTENCY AND SYMBOLS

CLASSIFICATION

Identification and classification of the soil is accomplished in general accordance with the ASTM version of the Unified Soil Classification System (USCS) as presented in ASTM Standard D2487. The standard is a qualitative method of classifying soil into the following major divisions (1) coarse grained, (2) fine grained, and (3) highly organic soils. Classification is performed on the soils passing the 75 mm (3 inch) sieve and if possible the amount of oversize material (> 75 mm particles) is noted on the soil logs. This is not always possible for drilled test holes because the oversize particles are typically too large to be captured in the sampling equipment. Oversize materials greater than 300 mm (12 inches) are termed boulders, while materials between 75 mm and 300 mm are termed cobbles. Coarse grained soils are those having 50% or more of the non-oversize soil retained on the No. 200 sieve (0.075 mm); if a greater percentage of the coarse grains is retained on the No. 4 (4.76 mm) sieve the coarse grained soil is classified as gravel, otherwise it is classified as sand. Fine grained soils are those having more than 50% of the non-oversize material passing the No. 200 sieve; these may be classified as silt or clay depending their Atterberg liquid and plastic limits or observations of field consistency. Refer to the most recent version of ASTM D2487 for a complete discussion of the classification method.

SOIL CONSISTENCY - CRITERIA

Soil consistency as defined below and determined by normal field and laboratory methods applies only to non-frozen material. For these materials, the influence of such factors as soil structure, i.e. Fissure systems, shinkage cracks, slickensides, etc., must be taken into consideration in making any correlation with the consistency values listed below. In permafrost zones, the consistency and strength of frozen soils may vary significantly and unexplainably with ice content, thermal regime and soil type.

Standard Penetration Test (Blows/ft) Relative to Denstiy/Consistency

N60 Density		Relative Density	N60 Consistency	
0-4	Very Loose	0-15%	< 2	Very Soft
4-10	Loose	15-35%	2 - 4	Soft
10-30	Medium	35-65%	4 - 8	Medium
30-50	Dense	65-85%	8 - 15	Stiff
> 50	Very Dense	>85%	15 - 30	Very Stiff
			> 30	Hard

Undrained Shear Strength

psf
< 250
250 - 500
500 - 1000
1000 - 2000
2000 - 4000
> 4000

Ref: Terzaghi and Peck, Soil Mechanics in Engineering Practice, 3rd Edition, pg 60-63
ASTM D1586 Standard Test Method for Penetration Test and Split-Barrel Sampling of Soils
ASTM D2487 Standard Practice for Classification of Soils for Engineering Purposes (USCS)

SAMPLER TYPE SYMBOLS

A	Auger Sample	Pb	Pitcher Barrel	St	1.4" Split Spoon w/ 47# Hammer
Bs	Bulk (grab) Sample	Sl	2.5" Split Spoon w/ 140# Hammer	Sx	2.0" Split Spoon w/ 47# Hammer
Cs	Core Barrel w/ Single Tube	Sm	2.5" Split Spoon w/ 300# Hammer	Sz	1.4 Split Spoon w/ 340# Hammer
Cd	Core Barrel w/ Double Tube	Sh	2.5" Split Spoon w/ 340# Hammer	Ts	Shelby Tube
Ct	Core Barrel w/ Triple Tube	Sp	2.5" Split Spoon, Pushed	Tm	Modified 2.5 O.D. Shelby Tube
Hl	2.5" Split Spoon w/ Air Hammer	Ss	1.4" Split Spoon w/ 140# Hammer		
Hs	1.4" Split Spoon w/ Air Hammer				

Note: Split Spoon size refers to sampler inside diameter.

P N D ENGINEERS, INC.

Designed: PND
Drawn: PJD
Checked: CRS
Project No.: 112048.01
Date: AUG. 2011

STANDARD BOREHOLE LOG DETAILS

BOREHOLE LOGS | FIGURE B-1

Depth (Feet)	Water Table	GRAPHIC SYMBOL	SOIL DESCRIPTION: Soil Name, Color, Moisture Content, Relative Density, Soil Structure, Mineralogy, Other Information	SAMPLES: Number	Type	Location	Recovery (%)	Penetration Blows per 6/Inch (per Foot)*	GRAPH: ■ BLOW COUNT (BPF)* ■ 20 40 60 80; ● POCKET PEN. (TSF) ● 1 2 3 4; ▲ VANE SHEAR (TSF) ▲ 2 4 6 8	COMMENTS: Casing Depth, Drilling Rate, Fluid Loss, Drill Pressure, Tests, Instrumentation Additional Information	Elevation (Feet)
0			0' - 0.30' A.C. PAVEMENT								24.43
	▼		POORLY-GRADED GRAVEL W/ SILT AND SAND Gray, Dry, Subangular, Medium Dense, GP-GM	1	Ss		30	6-6-5-4 (9)		Begin drilling 10/24/03 8:00 a.m. 2' to 3' - Hard, loud drilling 1-ft min. boulder encountered	
2											22.43
1	2	3	4	5	6	7	8	9	10	11	12

COLUMN DESCRIPTIONS

1	Depth	Depth (in feet) below the ground surface.
2	Water Level	Groundwater level recorded while drilling. Depths and times are recorded in comments column.
3	Graphic Log	Graphic depiction of materials encountered.
4	Soil Description	Description of materials encountered, including USCS soil descriptions.
5	Sample Number	Sample identification number.
6	Sample Type	Type of soil sample collected at depth interval depicted; symbols explained on Fig. B-01.
7	Sample Location	Location soil sample taken.
8	Sample Recovery	Percentage of sample recovered.
9	Sample Blows	Number of blows to advance driven sampler each 6-inch interval using sampler type specified with a 30-inch drop. Blows per foot given in parentheses.
10	Graphs	Graphic log depicting blow counts per foot with a specified split spoon, Pocket Penetration and Vane Shear tests depicted where taken on fine grained soils.
11	Comments	Comments or observations on drilling/sampling by driller or PND field personnel.
12	Elevation	Elevation (in feet) with respect to Mean Lower Low Water (MLLW) or other datum where specified.

GENERAL NOTES

1. Field descriptions may have been modified to reflect laboratory test results.
2. Descriptions on these boring logs apply only at the specific locations at the time the borings were drilled. They are not warranted to be representative of subsurface conditions at other locations or times.
3. Split spoon blow counts shown are uncorrected raw data. Various hammer sizes and split spoon sizes were used and have not been corrected to a Standard Penetration Test (SPT). Blow counts may vary substantially between SPT and these methods.

P N D ENGINEERS, INC.

Designed: PND
Drawn: PJD
Checked: CRS
Project No.: 112048.01
Date: AUG. 2011

STANDARD BOREHOLE LOG DETAILS

BOREHOLE LOGS | FIGURE B-2

65% DESIGN REVIEW SUBMITTAL

HAINES BOROUGH ALASKA

REVISIONS

REV.	DATE	DESCRIPTION	DWN.	CKD.	APP.

P N D ENGINEERS, INC.
9360 Glacier Highway Ste 100
Juneau, Alaska 99801
Phone: 907-586-2093
Fax: 907-586-2099
www.pndengineers.com

DESIGN: SRY CHECKED: CRS
DRAWN: PJD APPROVED: CRS
SCALE:
DATE: 12/7/12

HAINES BOROUGH
PORT CHILKOOT DOCK IMPROVEMENTS - PHASE 2

SHEET TITLE: STANDARD BOREHOLE LOG DETAILS

PND PROJECT NO.: 112048.04 DWG. FILE: 1.04.DWG

A1.04
SHEET 4 OF 48

N:\11XXX\112048 Port Chilkoot Dock Trestle Replacement\Drawings\PND\1.04, 1.05 Standard Borehole Log Details.dwg, 12/7/2012 11:55:55 AM
1:2

SOIL LEGEND

- FILL
- PEAT
- WELL GRADED GRAVEL (GW)
- POORLY GRADED GRAVEL (GP)
- POORLY GRADED GRAVEL WITH SAND (GP)
- SILTY GRAVEL (GM)
- SILTY GRAVEL WITH SAND (GM)
- POORLY GRADED SAND (SP)
- POORLY GRADED SAND WITH GRAVEL (SP)
- POORLY GRADED SAND WITH SILT (SP)
- SILTY SAND (SM)
- SILTY SAND WITH GRAVEL (SM)
- LEAN CLAY (CL)
- LEAN CLAY WITH SAND (CL)
- GRAVELLY LEAN CLAY (CL)
- CLAYEY SILT (ML/CL)
- CLAYEY SILT WITH GRAVEL (ML/CL)
- CLAYEY SILT WITH SAND (ML/CL)
- SANDY CLAYEY SILT WITH GRAVEL (ML/CL)
- SILT (ML)
- SILT WITH SAND (ML)
- SILT WITH GRAVEL (ML)
- SANDY SILT (ML)
- GRAVELLY SILT (ML)
- GRAVELLY SILT WITH SAND (ML)

LIST OF ABBREVIATIONS

Assoc	associated	TV	Tor Vane shear tester
BPF	blows per foot	vfn	very fine
dia	diameter	Vn/Vns	vein/veins
E.O.H.	end of borehole	wt	weight
fn	fine	w/	with
frag	fragments	x-cut	cross cut
ft	foot	xlls	crystals
Geonor	Vane shear tester	@	at
grn	grain	<	less than
PP	Pocket Penetrometer	>	greater than

P N D
ENGINEERS, INC.

Designed: PND
Drawn: PJD
Checked: MH
Project No.: 112048.01
Date: August 2011

STANDARD BOREHOLE LOG DETAILS

BOREHOLE LOGS | FIGURE B-3

METRIC CONVERSIONS

Length	1 inch	= 25.4 mm	1 mm	= 0.0394 inch
	1 foot	= 0.3048 m	1 m	= 3.281 feet
	1 mile	= 1.6093 km	1 km	= 0.621 mile
Area	1 sq. inch	= 6.452 cm²	1 cm²	= 0.155 sq. inch
	1 sq. foot	= 0.0929 m²	1 m²	= 10.764 sq. foot
	1 acre	= 0.4047 hectare	1 hectare	= 2.47 acre
	1 sq. mile	= 2.59 km²	1 km²	= 0.386 sq. mile
Volume	1 cu. inch	= 16.387 cm³	1 cm³	= 0.061 cu. inch
	1 cu. foot	(cc)	1 m³	= 35.31 cu. foot
	1 cu. yard	= 0.0283 m³	1 m³	= 1.308 cu. yard
	1 U.S. gallon	= 0.7646 m³	1 liter	= 0.264 U.S. gallon
		= 3.785 liters		
Mass	1 lb.	= 0.4536 kg	1 kg	= 2.205 lb.
Force	1 lb.	= 4.448 N	1 N	= 0.225 lb.
	1 ton	=8.896 kN	1 kN	= 0.1124 U.S. ton
Density	1 lb./cu. ft.	= 16.019 kg/m³	1 kg/m³	= 0.0624 lb./cu. foot
		= 0.1571 kN/m³	1 kN/m³	= 6.365 lb./ cu. foot
Pressure/Stress	1 lb./sq. in.	= 0.0703 kg/cm²	1 kg/cm²	= 14.22 lb./sq. inch
			1 kPa	= 0.145 lb./sq. inch
	1 lb./sq. ft.	(= 6.895 kPa)	1 kg/cm²	= 0.2048 lb./sq. ft.
		= 4.882 kg/cm²	1 kPa	= 20.886 lb./sq. foot
	1 U.S. ton/sq. ft.	(= 0.04788 kPa)	1 kPa	= 0.01044 U.S. ton/sq. foot
	[Note: 1 kPa	= 95.76 kPa		
		= 1 kN/m²		
Flow Velocity	1 gal./min.	= 6.309 x 10^{5} m³/sec	1 m³/sec	= 15,850 gallons per minute
	1 ft./sec.	= 0.3048 m/sec	1 m/sec	= 3.28 ft./sec
Coefficient of Compressibility M_v :	1 sq. ft./U.S. ton	= 0.0104 m²/kN		
	1 sq. in./lb	= 14.22 cm²/kg		
Coefficient of consolidation C_v :	1 sq. ft./year	= 0.0929 m²/year	1 m²/year	= 10.76 sq. ft. /year
		(= 0.002946 mm²/sec)	1 mm²/sec	= 339.4 sq. ft./year
Moment	1 lb.-ft.	= 0.1383 kq-m	1 kq-m	= 7.23 lb.-foot
		(= 1.3558 Nm)	1 N-m	= 0.7376 lb.-foot
Speed	1 mile/hour	= 1.609 km/hour	1 km/hour	= 0.622 mile/hour
		(=0.447 m/sec)	1 m/sec	= 2.237 mph
	1 foot/sec	= 0.3048 m/sec	1 m/sec	= 3.281 feet/sec

P N D
ENGINEERS, INC.

Designed: PND
Drawn: PJD
Checked: CRS
Project No.: 112048.01
Date: AUG. 2011

STANDARD BOREHOLE LOG DETAILS

BOREHOLE LOGS | FIGURE B-4

65% DESIGN REVIEW SUBMITTAL

HAINES BOROUGH ALASKA

REVISIONS

REV.	DATE	DESCRIPTION	DWN.	CKD.	APP.

P N D
ENGINEERS, INC.

9360 Glacier Highway Ste 100
Juneau, Alaska 99801
Phone: 907-586-2093
Fax: 907-586-2099
www.pndengineers.com

DESIGN: SRY CHECKED: CRS
DRAWN: PJD APPROVED: CRS
SCALE:
DATE: 12/7/12

HAINES BOROUGH
PORT CHILKOOT DOCK IMPROVEMENTS - PHASE 2

SHEET TITLE: STANDARD BOREHOLE LOG DETAILS

PND PROJECT NO.: 112048.04 DWG. FILE: 1.04.DWG

A1.05
SHEET 5 OF 48

N:\11XXX\112048 Port Chilkoot Dock Trestle Replacement\Drawings\PHD\1.04, 1.05 Standard Borehole Log Details.dwg, 12/7/2012 11:55:59 AM
1:2

Depth (feet)	Water Table	Graphic Symbol	SOIL DESCRIPTION: Soil Name, Color, Moisture Content, Relative Density, Soil Structure, Mineralogy, Other Information	SAMPLES: Number	Type	Location	Recovery % (RQD %)	Penetration Blows per 6/Inch (per foot) or {Rock Quality}	COMMENTS: Casing Depth, Drilling Rate, Fluid Loss, Drill Pressure, Tests, Instrumentation, Additional Information	Elevation (feet)
0.0										-6.2
				1	Sh		28	3-2-8-(10)	Begin Drilling: 8/25/11; Time:12:30 PM 4 inch casing sunk first 1 ft. into mudline under own weight, with 6 blows casing sunk an additional 3 ft.; added a 5 ft casing segment, with an average of 36 BPF, advanced casing to 9 ft below mudline	
2.5										-8.7
5.0									only fine sands observed in the cuttings	-11.2
7.5										-13.7
									smooth advance of the drill steel while washing hole	
10.0			POORLY GRADED SAND (SP) dark gray to black, wet, loose to medium dense; 100% medium sand; earthy odor, @ 14.5 ft sand color changes to a greenish-gray	2	Sh		0	10-16-20-(36)	"no recovery" ; catcher in sampler sheared off	-16.2
12.5										-18.7
15.0				3	Sh		84	8-11-16-(27)		-21.2
17.5										-23.7
			@ 19.5 ft - 19.7 ft: greenish gray, wet, loose; %G = 5, fine to medium grained and sub-rounded; % S = 95, fine to coarse grained						increasing white broken shell fragments in cuttings	
20.0			SAND (SW)	4A	Sh		100	2-1-2-1-(3)		-26.2

GRAPH: BLOW COUNT 20 40 60 80; POCKET PEN (tsf) 1 2 3 4; VANE SHEAR (tsf) 0.2 0.4 0.6 0.8

P N D ENGINEERS, INC.

Logged By:	PJD/SCS
Data Entry:	PJD
Checked:	CRS
Project No.:	112048.01
Date:	Aug 2011

PORT CHILKOOT DOCK IMPROVEMENTS
Portage Cove
Haines, Alaska

BOREHOLE 1 — FIGURE B-5 1 of 4

Depth (feet)	Water Table	Graphic Symbol	SOIL DESCRIPTION: Soil Name, Color, Moisture Content, Relative Density, Soil Structure, Mineralogy, Other Information	SAMPLES: Number	Type	Location	Recovery % (RQD %)	Penetration Blows per 6/Inch (per foot) or {Rock Quality}	COMMENTS: Casing Depth, Drilling Rate, Fluid Loss, Drill Pressure, Tests, Instrumentation, Additional Information	Elevation (feet)
20.0				4B	Sh		38		PP = 2.50tsf Geonor =0.32tsf	-26.2
22.5									milky green/gray fines in the cuttings	-28.7
25.0				5	Ss		39	2-2-3-(5)	@ sample 5 switched to Ss sampler Geonor =0.22tsf	-31.2
27.5										-33.7
30.0			CLAYEY SILT (ML/CL) greenish gray mottled with dark gray, wet, low plasticity; slow dilatancy Consistency of the cohesive sediment is very soft to soft	6	Ss		78	0-0-0-(0)	sampler sunk under own weight PP = 0.00tsf Geonor =0.00tsf stopped casing hole @ 29.5 ft.	-36.2
32.5										-38.7
35.0			Beginning @ 34.5 ft and continuing to 59.5 ft - trace of sub-rounded gravels to 1.5 inch dia.	7	Ss		100	0-0-0-0-(0)	sampler sunk under own weight PP = 0.75tsf Geonor =0.21tsf	-41.2
37.5									after sample 7, stopped drilling - time: 8:00 PM; resumed drilling: 8/26/11; time: 8:00 AM	-43.7
40.0									no H2O pressure @ 39.5 ft; advanced casing to 39.5 ft prior to sampling PP = 1.25tsf	-46.2

GRAPH: BLOW COUNT 20 40 60 80; POCKET PEN (tsf) 1 2 3 4; VANE SHEAR (tsf) 0.2 0.4 0.6 0.8

P N D ENGINEERS, INC.

Logged By:	PJD/SCS
Data Entry:	PJD
Checked:	CRS
Project No.:	112048.01
Date:	Aug 2011

PORT CHILKOOT DOCK IMPROVEMENTS
Portage Cove
Haines, Alaska

BOREHOLE 1 — FIGURE B-5 2 of 4

65% DESIGN REVIEW SUBMITTAL

REVISIONS

REV.	DATE	DESCRIPTION	DWN.	CKD.	APP.

P N D ENGINEERS, INC.
9360 Glacier Highway Ste 100
Juneau, Alaska 99801
Phone: 907-586-2093
Fax: 907-586-2099
www.pndengineers.com

DESIGN: PJD CHECKED: CRS
DRAWN: PJD APPROVED: CRS
SCALE: NTS
DATE: 12/7/12

HAINES BOROUGH
PORT CHILKOOT DOCK IMPROVEMENTS - PHASE 2

SHEET TITLE: BOREHOLE LOGS

PND PROJECT NO.: 112048.04 DWG. FILE: 1.06–1.11.DWG

A1.06
SHEET 6 OF 48

N:\11XXX\112048 Port Chilkoot Dock Trestle Replacement\Drawings\PND\1.06 - 1.11 Borehole Logs.dwg, 12/7/2012 11:56:35 AM, 1:2

Depth (feet)	Water Table	Graphic Symbol	SOIL DESCRIPTION: Soil Name, Color, Moisture Content, Relative Density, Soil Structure, Mineralogy, Other Information	SAMPLES: Number	Type	Location	Recovery % (RQD %)	Penetration Blows per 6/Inch (per foot) or {Rock Quality}	COMMENTS: Casing Depth, Drilling Rate, Fluid Loss, Drill Pressure, Tests, Instrumentation, Additional Information	Elevation (feet)
40.0				8	Ss		100	0-1-1-1-(2)	Geonor =0.21tsf sampler sunk first 6 inches under own weight	-46.2
									stopped casing hole @ 39.5 ft.	
42.5										-48.7
									milky green/gray fines in cuttings	
45.0										-51.2
									steady, smooth advancement rate of drill steel	
47.5										-53.7
50.0			CLAYEY SILT (ML/CL) greenish gray mottled with dark gray, wet, low plasticity; slow dilatancy Consistency noticeably increases to stiff Soil within sampler tends to stick together when sample pulled; silt has an increased gritty texture	9	Ss		75	3-2-9-5-(11)	PP = 0.00tsf Geonor =0.42tsf	-56.2
									milky green/gray fines in cuttings	
52.5										-58.7
									steady, smooth advancement rate of drill steel	
55.0										-61.2
57.5			Gravel lense or boulder, see comment						@ 57.5 ft drill steel bouncing	-63.7
			@59.5 ft to 60.6 ft: gray, wet, med dense; (%G = 0; % <No.200 = 0)							
60.0			SAND (SW)							-66.2

GRAPH: BLOW COUNT 20 40 60 80; POCKET PEN (tsf) 1 2 3 4; VANE SHEAR (tsf) 0.2 0.4 0.6 0.8

P N D ENGINEERS, INC.

Logged By: PJD/SCS
Data Entry: PJD
Checked: CRS
Project No.: 112048.01
Date: Aug 2011

PORT CHILKOOT DOCK IMPROVEMENTS
Portage Cove
Haines, Alaska

BOREHOLE 1

FIGURE B-5
3 of 4

Depth (feet)	Water Table	Graphic Symbol	SOIL DESCRIPTION: Soil Name, Color, Moisture Content, Relative Density, Soil Structure, Mineralogy, Other Information	SAMPLES: Number	Type	Location	Recovery % (RQD %)	Penetration Blows per 6/Inch (per foot) or {Rock Quality}	COMMENTS: Casing Depth, Drilling Rate, Fluid Loss, Drill Pressure, Tests, Instrumentation, Additional Information	Elevation (feet)
60.0			SAND (SW)	10A	Ss		100	5-14-21-38-(35)	@ 62.5 ft drill steel bouncing w/ little advancement; bouncing ceased w/ drill steel rotating and no advancement, full H2O pressure, continued 10 minutes	-66.2
			CLAYEY SILT WITH GRAVEL (ML/CL) greenish gray, moist, very stiff; 15% fine to coarse, subangular to subrounded gravel; 5% sand	10B	Ss		65			
62.5			REFUSAL: see comment						Terminated Drilling: 8/26/11; Time: 11:00AM	-68.7
65.0										-71.2
67.5										-73.7
70.0										-76.2
72.5										-78.7
75.0										-81.2
77.5										-83.7
80.0										-86.2

GRAPH: BLOW COUNT 20 40 60 80; POCKET PEN (tsf) 1 2 3 4; VANE SHEAR (tsf) 0.2 0.4 0.6 0.8

P N D ENGINEERS, INC.

Logged By: PJD/SCS
Data Entry: PJD
Checked: CRS
Project No.: 112048.01
Date: Aug 2011

PORT CHILKOOT DOCK IMPROVEMENTS
Portage Cove
Haines, Alaska

BOREHOLE 1

FIGURE B-5
4 of 4

65% DESIGN REVIEW SUBMITTAL

HAINES BOROUGH ALASKA

REVISIONS

REV.	DATE	DESCRIPTION	DWN.	CKD.	APP.

P N D ENGINEERS, INC.
9360 Glacier Highway Ste 100
Juneau, Alaska 99801
Phone: 907-586-2093
Fax: 907-586-2099
www.pndengineers.com

DESIGN: PJD CHECKED: CRS
DRAWN: PJD APPROVED: CRS
SCALE: NTS
DATE: 12/7/12

HAINES BOROUGH
PORT CHILKOOT DOCK IMPROVEMENTS - PHASE 2

SHEET TITLE: BOREHOLE LOGS

PND PROJECT NO.: 112048.04 DWG. FILE: 1.06–1.11.DWG

A1.07
SHEET 7 OF 48

N:\11XXX\112048 Port Chilkoot Dock Trestle Replacement\Drawings\PHD\1.06 – 1.11 Borehole Logs.dwg, 12/7/2012 11:56:09 AM, 1:2

Depth (feet)	Water Table	Graphic Symbol	Soil Name, Color, Moisture Content, Relative Density, Soil Structure, Mineralogy, Other Information	Number	Type	Location	Recovery % (RQD %)	Penetration Blows per 6/Inch (per foot) or {Rock Quality}	Casing Depth, Drilling Rate, Fluid Loss, Drill Pressure, Tests, Instrumentation, Additional Information	Elevation (feet)
0.0			No surface sample taken						Begin Drilling: 8/26/11; Time: 2:30PM	-3.6
2.5									sand with shell fragments in cuttings	-6.1
5.0			POORLY GRADED SAND (SP) gray, wet, medium dense; 100% sand; petroleum odor	1	Ss		56	12-16-21-(37)	@ 7 ft. notable increase in casing BPF due to hitting debris (fuel container ?); slight oil sheen in wash w/ strong petroleum odor	-8.6
7.5										-11.1
10.0				2A	Ss		26	7-10-4-1-(14)		-13.6
			Sample 2B: greenish gray; wet; very soft; %G=0; %S=85; %F=15; shell fragments noted	2B	Ss		100			
12.5										-16.1
									milky green/gray fines in cuttings	
15.0			CLAYEY SILT (ML/CL) Consistency of cohesive sediment varies from very soft to stiff	3	Ss		0	0-0-0-0-(0)	"no recovery" sampler sunk under own weight	-18.6
17.5										-21.1
									abundant white broken shell fragments in the cuttings	
20.0										-23.6

GRAPH: BLOW COUNT 20 40 60 80; POCKET PEN (tsf) 1 2 3 4; VANE SHEAR (tsf) 0.2 0.4 0.6 0.8

P N D ENGINEERS, INC.

Logged By: PJD/SCS
Data Entry: PJD
Checked: CRS
Project No.: 112048.01
Date: Aug 2011

PORT CHILKOOT DOCK IMPROVEMENTS
Portage Cove
Haines, Alaska

BOREHOLE 2

FIGURE B-6
1 of 4

Depth (feet)	Water Table	Graphic Symbol	Soil Name, Color, Moisture Content, Relative Density, Soil Structure, Mineralogy, Other Information	Number	Type	Location	Recovery % (RQD %)	Penetration Blows per 6/Inch (per foot) or {Rock Quality}	Casing Depth, Drilling Rate, Fluid Loss, Drill Pressure, Tests, Instrumentation, Additional Information	Elevation (feet)
20.0			Top 3" in sample #4 well graded sand (SW)	4	Ss		100	0-0-1-1-(1)	PP = 3.00tsf Geonor =0.42tsf sampler sunk first 12" under own weight driller stopped casing @ 20 ft.	-23.6
22.5										-26.1
			Sand or gravel lens based on nature of drill steel						@ 24 ft driller noted grinding of drill steel	
25.0				5	Ss		13	5-5-3-5-(8)		-28.6
27.5										-31.1
30.0			CLAYEY SILT (ML/CL) greenish gray mottled with dark gray, wet, low to medium plasticity; slow dilatancy; predominantly fines <No.200, with intervals of coarser material, based on drilling action and material noted at sample depth	6	Ss		75	4-5-7-8-(12)	PP = 4.50tsf Geonor =0.96tsf	-33.6
			Soil w/in sampler breaks into segments when pulled apart; slight gritty texture							
32.5										-36.1
			Consistency of soil increasing from stiff to very stiff							
35.0			Bottom of sample #7 (2" of well-graded sand)	7	Ss		33	7-9-10-13-(19)	@ 36 ft: grinding action of drill steel	-38.6
37.5										-41.1
40.0										-43.6

GRAPH: BLOW COUNT 20 40 60 80; POCKET PEN (tsf) 1 2 3 4; VANE SHEAR (tsf) 0.2 0.4 0.6 0.8

P N D ENGINEERS, INC.

Logged By: PJD/SCS
Data Entry: PJD
Checked: CRS
Project No.: 112048.01
Date: Aug 2011

PORT CHILKOOT DOCK IMPROVEMENTS
Portage Cove
Haines, Alaska

BOREHOLE 2

FIGURE B-6
2 of 4

65% DESIGN REVIEW SUBMITTAL

HAINES BOROUGH ALASKA

REVISIONS

REV.	DATE	DESCRIPTION	DWN.	CKD.	APP.

P N D ENGINEERS, INC.
9360 Glacier Highway Ste 100
Juneau, Alaska 99801
Phone: 907-586-2093
Fax: 907-586-2099
www.pndengineers.com

DESIGN: PJD CHECKED: CRS
DRAWN: PJD APPROVED: CRS
SCALE: NTS
DATE: 12/7/12

HAINES BOROUGH
PORT CHILKOOT DOCK IMPROVEMENTS - PHASE 2

SHEET TITLE: BOREHOLE LOGS

PND PROJECT NO.: 112048.04 DWG. FILE: 1.06-1.11.DWG

A1.08

SHEET 8 OF 48

N:\11XXX\112048 Port Chilkoot Dock Trestle Replacement\Drawings\FHD\1.06 - 1.11 Borehole Logs.dwg, 12/7/2012 11:56:14 AM, 1:2

Depth (feet)	Soil Name, Color, Moisture Content, Relative Density, Soil Structure, Mineralogy, Other Information	Number	Type	Location	Recovery % (RQD %)	Penetration Blows per 6/Inch (per foot) or {Rock Quality}	Casing Depth, Drilling Rate, Fluid Loss, Drill Pressure, Tests, Instrumentation, Additional Information	Elevation (feet)
40.0	@ 40 ft: 3" of silt w/ sand	8	Ss		100	1-0-2-3-(2)	PP = 0.50tsf Geonor =0.23tsf sampler sunk 4" under own weight after 1st blow Stopped Drilling @ time: 7:25PM; Resumed drilling 8/27/11; Time: 8:00AM	-43.6
42.5	Intermittant sand or gravel lenses interpreted down to 50 ft based on nature of drill steel							-46.1
45.0	CLAYEY SILT WITH SAND OR GRAVEL						driller noted sands or gravels down to 50 ft.	-48.6
47.5								-51.1
50.0	POORLY GRADED SAND (SP) gray black, wet, loose; 0% gravel; 100% coarse sand; 0% fines	9A	Ss		53	9-6-6-10-(12)		-53.6
	Sample 9B: greenish gray; wet; firm; 5% fine to medium, sub-rounded gravel; 10% sand; 85% fines; low to medium plasticity; slow dilantancy; gritty texture	9B	Ss		67		PP = 1.25tsf Geonor =0.37tsf	
52.5								-56.1
55.0	CLAYEY SILT WITH SAND (ML/CL)							-58.6
57.5								-61.1
60.0								-63.6

Graphic Symbol

Water Table

GRAPH: BLOW COUNT (20, 40, 60, 80); POCKET PEN (tsf) (1, 2, 3, 4); VANE SHEAR (tsf) (0.2, 0.4, 0.6, 0.8)

P N D ENGINEERS, INC.

Logged By:	PJD/SCS
Data Entry:	PJD
Checked:	CRS
Project No.:	112048.01
Date:	Aug 2011

PORT CHILKOOT DOCK IMPROVEMENTS
Portage Cove
Haines, Alaska

BOREHOLE 2

FIGURE B-6
3 of 4

Depth (feet)	Soil Name, Color, Moisture Content, Relative Density, Soil Structure, Mineralogy, Other Information	Number	Type	Location	Recovery % (RQD %)	Penetration Blows per 6/Inch (per foot) or {Rock Quality}	Casing Depth, Drilling Rate, Fluid Loss, Drill Pressure, Tests, Instrumentation, Additional Information	Elevation (feet)
60.0	No samples obtained from 60 ft to E.O.H.						switched to SH sampler and attempted sample @ 60 ft; sampler couldn't reach depth; driller used tricone bit and cleaned down to 65 ft looking for refusal; continued down to 70 ft	-63.6
62.5	Soil classification based on nature of drill steel and nearby sampled holes						added casing; first 5 ft section: casing blow counts 25/ft; preceding 10 ft of casing: 27/ft	-66.1
65.0							noticeable grinding action of drill steel down to 80 ft	-68.6
67.5	SANDY CLAYEY SILT WITH GRAVEL (ML/CL)							-71.1
70.0								-73.6
72.5								-76.1
75.0							drill steel noticeably bouncing	-78.6
77.5							Terminated drilling:8/27/11; Time: 12:30PM	-81.1
80.0	Terminated borehole with NO REFUSAL							-83.6

Graphic Symbol

Water Table

GRAPH: BLOW COUNT (20, 40, 60, 80); POCKET PEN (tsf) (1, 2, 3, 4); VANE SHEAR (tsf) (0.2, 0.4, 0.6, 0.8)

P N D ENGINEERS, INC.

Logged By:	PJD/SCS
Data Entry:	PJD
Checked:	CRS
Project No.:	112048.01
Date:	Aug 2011

PORT CHILKOOT DOCK IMPROVEMENTS
Portage Cove
Haines, Alaska

BOREHOLE 2

FIGURE B-6
4 of 4

65% DESIGN REVIEW SUBMITTAL

REVISIONS

REV.	DATE	DESCRIPTION	DWN.	CKD.	APP.

P N D ENGINEERS, INC.
9360 Glacier Highway Ste 100
Juneau, Alaska 99801
Phone: 907-586-2093
Fax: 907-586-2099
www.pndengineers.com

DESIGN: PJD CHECKED: CRS
DRAWN: PJD APPROVED: CRS
SCALE: NTS
DATE: 12/7/12

HAINES BOROUGH
PORT CHILKOOT DOCK
IMPROVEMENTS - PHASE 2

SHEET TITLE: BOREHOLE LOGS

PND PROJECT NO.: 112048.04 DWG. FILE: 1.06–1.11.DWG

A1.09

SHEET 9 OF 48

H:\11XXX\112048 Port Chilkoot Dock Trestle Replacement\Drawings\PND\1.06 - 1.11 Borehole Logs.dwg, 12/7/2012 11:56:19 AM, 1:2

Depth (feet)	Water Table	Graphic Symbol	SOIL DESCRIPTION: Soil Name, Color, Moisture Content, Relative Density, Soil Structure, Mineralogy, Other Information	SAMPLES: Number	Type	Location	Recovery % (RQD %)	Penetration Blows per 6/Inch (per foot) or {Rock Quality}	COMMENTS: Casing Depth, Drilling Rate, Fluid Loss, Drill Pressure, Tests, Instrumentation, Additional Information	Elevation (feet)
0.0			No surface sample taken; where no sampling, soil classification based on nearby sampled holes						Begin Drilling:8/27/11; Time:1:55PM	0.4
									@ 2ft: wood debris in cuttings	
2.5										-2.1
									watching cuttings for (SP)-(ML/CL) contact as seen in BH-2 and BH-3	
5.0										-4.6
			POORLY GRADED SAND (SP)							
7.5										-7.1
10.0										-9.6
			Gray, wet, loose; 0% gravel; 100% medium grained sand; 0% fines	1	Ss		9	5-5-0-0-(5)	sampler sunk under own weight after 10 blows	
12.5										-12.1
15.0			CLAYEY SILT (ML/CL) greenish gray, wet, very soft; 100% fines; low to medium plasticity; slow dilatancy; top 2 inches sand, bottom 2 inches silt	2	Ss		9	0-0-0-2-(0)	sampler sunk under own weight to 18", 2 blows for final 6"	-14.6
17.5										-17.1
20.0			SANDY CLAYEY SILT WITH GRAVEL (ML/CL)					3-6-11-16-	PP = 4.50tsf Geonor =1.29tsf	-19.6

GRAPH: ■ BLOW COUNT (20, 40, 60, 80); ● POCKET PEN (tsf) (1, 2, 3, 4); ▲ VANE SHEAR (tsf) (0.2, 0.4, 0.6, 0.8)

P N D ENGINEERS, INC.

Logged By:	PJD/SCS
Data Entry:	PJD
Checked:	CRS
Project No.:	112048.01
Date:	Aug 2011

PORT CHILKOOT DOCK IMPROVEMENTS
Portage Cove
Haines, Alaska

BOREHOLE 3

FIGURE B-7
1 of 3

Depth (feet)	Water Table	Graphic Symbol	SOIL DESCRIPTION: Soil Name, Color, Moisture Content, Relative Density, Soil Structure, Mineralogy, Other Information	SAMPLES: Number	Type	Location	Recovery % (RQD %)	Penetration Blows per 6/Inch (per foot) or {Rock Quality}	COMMENTS: Casing Depth, Drilling Rate, Fluid Loss, Drill Pressure, Tests, Instrumentation, Additional Information	Elevation (feet)
20.0				3	Ss		100	(17)		-19.6
22.5									milky green/gray fines in the cuttings	-22.1
25.0				4	Ss		100	6-8-13-18-(21)	PP = 4.50tsf Geonor =1.10tsf	-24.6
27.5										-27.1
30.0			SANDY CLAYEY SILT WITH GRAVEL (ML/CL) greenish gray, moist, very stiff; 15% fine to coarse, subrounded gravel; 20% sand; 65% fines; low plasticity; slow dilatancy	5	Ss		9	6-6-10-14-(16)		-29.6
									after sample 5 driller stopped casing hole; probing for refusal	
32.5										-32.1
35.0										-34.6
37.5										-37.1
40.0										-39.6

GRAPH: ■ BLOW COUNT (20, 40, 60, 80); ● POCKET PEN (tsf) (1, 2, 3, 4); ▲ VANE SHEAR (tsf) (0.2, 0.4, 0.6, 0.8)

P N D ENGINEERS, INC.

Logged By:	PJD/SCS
Data Entry:	PJD
Checked:	CRS
Project No.:	112048.01
Date:	Aug 2011

PORT CHILKOOT DOCK IMPROVEMENTS
Portage Cove
Haines, Alaska

BOREHOLE 3

FIGURE B-7
2 of 3

65% DESIGN REVIEW SUBMITTAL

HAINES BOROUGH ALASKA

REVISIONS

REV.	DATE	DESCRIPTION	DWN.	CKD.	APP.

P N D ENGINEERS, INC.
9360 Glacier Highway Ste 100
Juneau, Alaska 99801
Phone: 907-586-2093
Fax: 907-586-2099
www.pndengineers.com

DESIGN: PJD CHECKED: CRS
DRAWN: PJD APPROVED: CRS
SCALE: NTS
DATE: 12/7/12

HAINES BOROUGH
PORT CHILKOOT DOCK
IMPROVEMENTS - PHASE 2

SHEET TITLE: BOREHOLE LOGS

PND PROJECT NO.: 112048.04 DWG. FILE: 1.06-1.11.DWG

A1.10
SHEET 10 OF 48

N:\11XXX\112048 Port Chilkoot Dock Trestle Replacement\Drawings\PND 1.06 - 1.11 Borehole Logs.dwg, 12/7/2012 11:56:24 AM, 1:2

Depth (feet)	Water Table	Graphic Symbol	SOIL DESCRIPTION: Soil Name, Color, Moisture Content, Relative Density, Soil Structure, Mineralogy, Other Information	SAMPLES: Number	Type	Location	Recovery % (RQD %)	Penetration Blows per 6/Inch (per foot) or {Rock Quality}	GRAPH: BLOW COUNT 20 40 60 80; POCKET PEN (tsf) 1 2 3 4; VANE SHEAR (tsf) 0.2 0.4 0.6 0.8	COMMENTS: Casing Depth, Drilling Rate, Fluid Loss, Drill Pressure, Tests, Instrumentation, Additional Information	Elevation (feet)
40.0										@ 39.5FT sampler sunk first 6" under own weight	-39.6
			No samples obtained from 40 ft to E.O.H.; soil classification based on nature of drill steel, see comments								
42.5										milky greenish-gray colored fines in cuttings; intermittent grinding of drill steel beginning @ 45 ft	-42.1
45.0			SANDY CLAYEY SILT WITH GRAVEL (ML/CL)								-44.6
47.5											-47.1
										violent bouncing of drill steel beginning @ 48 ft	
50.0			Increase in gravels, cobbles, or boulders based on action of drill steel, see comments								-49.6
52.5										slow rate of drill steel advancement	-52.1
										driller stated soil in hole is beginning to slough	
55.0			NO REFUSAL: terminated borehole with slow rate of drill steel advancement							Terminated drilling: 8/27/11; Time: 5:50PM	-54.6
57.5											-57.1
60.0											-59.6

P N D ENGINEERS, INC.

Logged By: PJD/SCS
Data Entry: PJD
Checked: CRS
Project No.: 112048.01
Date: Aug 2011

PORT CHILKOOT DOCK IMPROVEMENTS
Portage Cove
Haines, Alaska

BOREHOLE 3

FIGURE B-7
3 of 3

65% DESIGN REVIEW SUBMITTAL

REVISIONS

REV.	DATE	DESCRIPTION	DWN.	CKD.	APP.

P N D ENGINEERS, INC.
9360 Glacier Highway Ste 100
Juneau, Alaska 99801
Phone: 907-586-2093
Fax: 907-586-2099
www.pndengineers.com

DESIGN: PJD CHECKED: CRS
DRAWN: PJD APPROVED: CRS
SCALE: NTS
DATE: 12/7/12

HAINES BOROUGH
PORT CHILKOOT DOCK IMPROVEMENTS - PHASE 2

SHEET TITLE: BOREHOLE LOGS

PND PROJECT NO.: 112048.04 DWG. FILE: 1.06–1.11.DWG

A1.11
SHEET 11 OF 48

N:\11XXX\112048 Port Chilkoot Dock Trestle Replacement\Drawings\PND\1.06 – 1.11 Borehole Logs.dwg, 12/7/2012 11:56:29 AM, 1:2

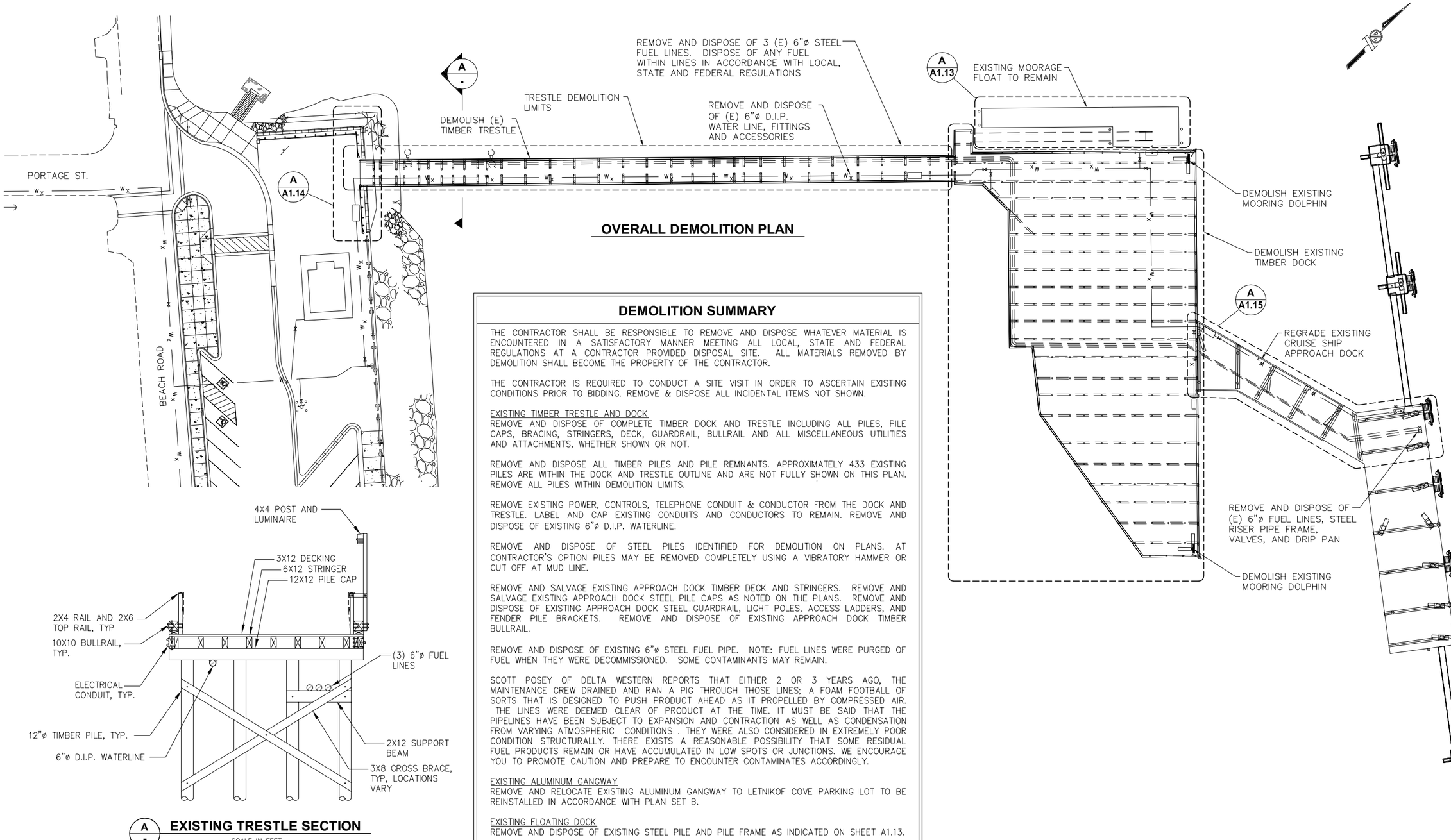

OVERALL DEMOLITION PLAN

DEMOLITION SUMMARY

THE CONTRACTOR SHALL BE RESPONSIBLE TO REMOVE AND DISPOSE WHATEVER MATERIAL IS ENCOUNTERED IN A SATISFACTORY MANNER MEETING ALL LOCAL, STATE AND FEDERAL REGULATIONS AT A CONTRACTOR PROVIDED DISPOSAL SITE. ALL MATERIALS REMOVED BY DEMOLITION SHALL BECOME THE PROPERTY OF THE CONTRACTOR.

THE CONTRACTOR IS REQUIRED TO CONDUCT A SITE VISIT IN ORDER TO ASCERTAIN EXISTING CONDITIONS PRIOR TO BIDDING. REMOVE & DISPOSE ALL INCIDENTAL ITEMS NOT SHOWN.

EXISTING TIMBER TRESTLE AND DOCK
REMOVE AND DISPOSE OF COMPLETE TIMBER DOCK AND TRESTLE INCLUDING ALL PILES, PILE CAPS, BRACING, STRINGERS, DECK, GUARDRAIL, BULLRAIL AND ALL MISCELLANEOUS UTILITIES AND ATTACHMENTS, WHETHER SHOWN OR NOT.

REMOVE AND DISPOSE ALL TIMBER PILES AND PILE REMNANTS. APPROXIMATELY 433 EXISTING PILES ARE WITHIN THE DOCK AND TRESTLE OUTLINE AND ARE NOT FULLY SHOWN ON THIS PLAN. REMOVE ALL PILES WITHIN DEMOLITION LIMITS.

REMOVE EXISTING POWER, CONTROLS, TELEPHONE CONDUIT & CONDUCTOR FROM THE DOCK AND TRESTLE. LABEL AND CAP EXISTING CONDUITS AND CONDUCTORS TO REMAIN. REMOVE AND DISPOSE OF EXISTING 6"ø D.I.P. WATERLINE.

REMOVE AND DISPOSE OF STEEL PILES IDENTIFIED FOR DEMOLITION ON PLANS. AT CONTRACTOR'S OPTION PILES MAY BE REMOVED COMPLETELY USING A VIBRATORY HAMMER OR CUT OFF AT MUD LINE.

REMOVE AND SALVAGE EXISTING APPROACH DOCK TIMBER DECK AND STRINGERS. REMOVE AND SALVAGE EXISTING APPROACH DOCK STEEL PILE CAPS AS NOTED ON THE PLANS. REMOVE AND DISPOSE OF EXISTING APPROACH DOCK STEEL GUARDRAIL, LIGHT POLES, ACCESS LADDERS, AND FENDER PILE BRACKETS. REMOVE AND DISPOSE OF EXISTING APPROACH DOCK TIMBER BULLRAIL.

REMOVE AND DISPOSE OF EXISTING 6"ø STEEL FUEL PIPE. NOTE: FUEL LINES WERE PURGED OF FUEL WHEN THEY WERE DECOMMISSIONED. SOME CONTAMINANTS MAY REMAIN.

SCOTT POSEY OF DELTA WESTERN REPORTS THAT EITHER 2 OR 3 YEARS AGO, THE MAINTENANCE CREW DRAINED AND RAN A PIG THROUGH THOSE LINES; A FOAM FOOTBALL OF SORTS THAT IS DESIGNED TO PUSH PRODUCT AHEAD AS IT PROPELLED BY COMPRESSED AIR. THE LINES WERE DEEMED CLEAR OF PRODUCT AT THE TIME. IT MUST BE SAID THAT THE PIPELINES HAVE BEEN SUBJECT TO EXPANSION AND CONTRACTION AS WELL AS CONDENSATION FROM VARYING ATMOSPHERIC CONDITIONS . THEY WERE ALSO CONSIDERED IN EXTREMELY POOR CONDITION STRUCTURALLY. THERE EXISTS A REASONABLE POSSIBILITY THAT SOME RESIDUAL FUEL PRODUCTS REMAIN OR HAVE ACCUMULATED IN LOW SPOTS OR JUNCTIONS. WE ENCOURAGE YOU TO PROMOTE CAUTION AND PREPARE TO ENCOUNTER CONTAMINATES ACCORDINGLY.

EXISTING ALUMINUM GANGWAY
REMOVE AND RELOCATE EXISTING ALUMINUM GANGWAY TO LETNIKOF COVE PARKING LOT TO BE REINSTALLED IN ACCORDANCE WITH PLAN SET B.

EXISTING FLOATING DOCK
REMOVE AND DISPOSE OF EXISTING STEEL PILE AND PILE FRAME AS INDICATED ON SHEET A1.13.

65% DESIGN REVIEW SUBMITTAL

REVISIONS

REV.	DATE	DESCRIPTION	DWN.	CKD.	APP.

PND ENGINEERS, INC.
9360 Glacier Highway Ste 100
Juneau, Alaska 99801
Phone: 907-586-2093
Fax: 907-586-2099
www.pndengineers.com

DESIGN: SRY CHECKED: CRS
DRAWN: SRY APPROVED: CRS
SCALE: SCALE IN FEET 0 30 60 FT.
DATE: 12/7/12

HAINES BOROUGH
PORT CHILKOOT DOCK IMPROVEMENTS - PHASE 2

SHEET TITLE: OVERALL DEMOLITION PLAN

PND PROJECT NO.: 112048.04 DWG. FILE: 1.12.DWG

A1.12
SHEET 12 OF 48

N:\11XXX\112048 Port Chilkoot Dock Trestle Replacement\Drawings\FHD\1.12 - Overall Demolition Plan.dwg, 12/7/2012 11:56:37 AM, 1:2

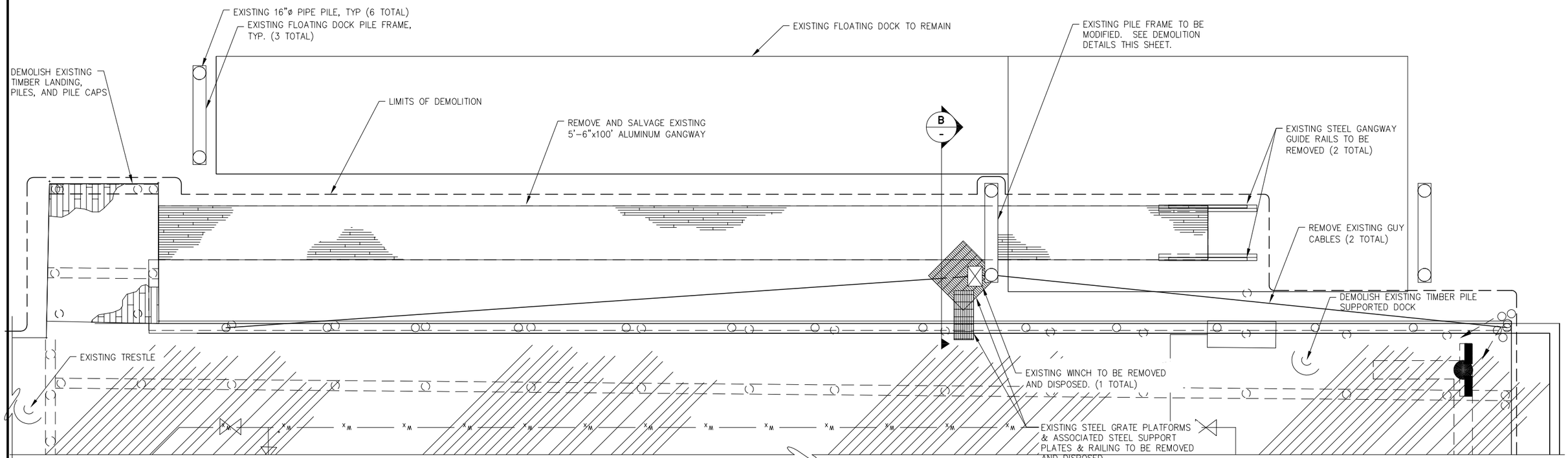

A
-
GANGWAY DEMOLITION PLAN

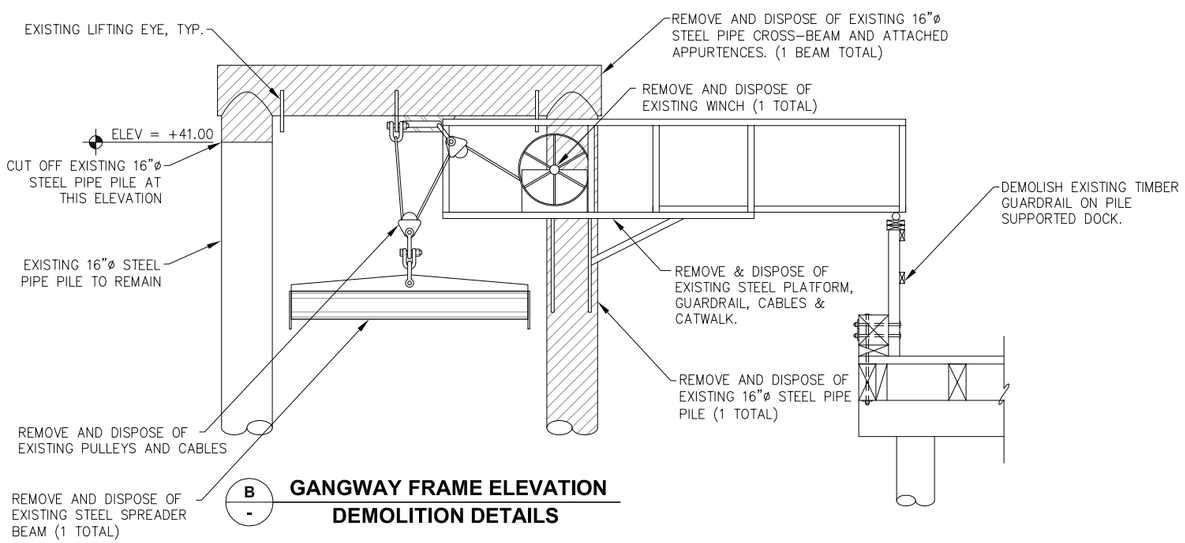

B
-
GANGWAY FRAME ELEVATION
DEMOLITION DETAILS

65% DESIGN REVIEW SUBMITTAL

REVISIONS

REV.	DATE	DESCRIPTION	DWN.	CKD.	APP.

P N D ENGINEERS, INC.
9360 Glacier Highway Ste 100
Juneau, Alaska 99801
Phone: 907-586-2093
Fax: 907-586-2099
www.pndengineers.com

DESIGN: SRY CHECKED: CRS
DRAWN: SRY APPROVED: CRS
SCALE: SCALE IN FEET 0 50 100 FT.
DATE: 12/7/12

HAINES BOROUGH
PORT CHILKOOT DOCK IMPROVEMENTS - PHASE 2

SHEET TITLE:
GANGWAY AND GANGWAY LANDING DEMOLITION PLAN

PND PROJECT NO.: 112048.04 DWG. FILE: 1.13.DWG

A1.13
SHEET 13 OF 48

N:\11XXX\112048 Port Chilkoot Dock Trestle Replacement\Drawings\FHD\1.13 - Gangway and Gangway Landing Demolition Plan.dwg, 12/7/2012 11:56:43 AM, 1:2

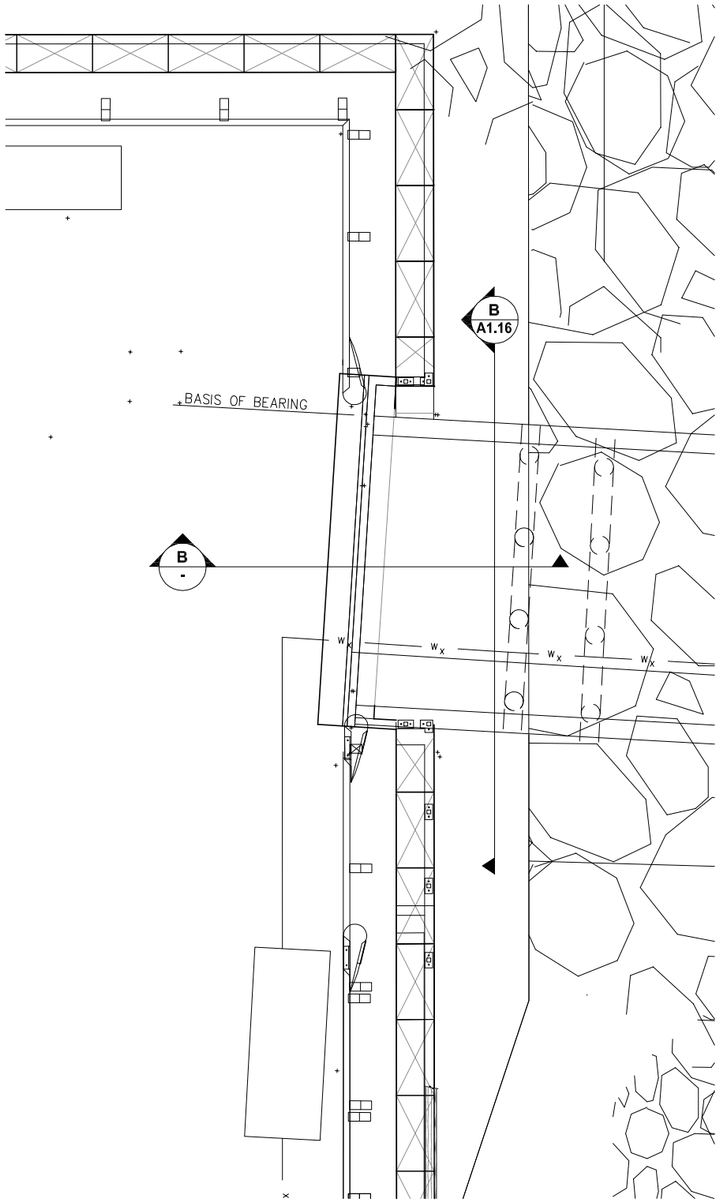

A - **ABUTMENT DEMOLITION PLAN**

SCALE IN FEET
0 4 8 FT.

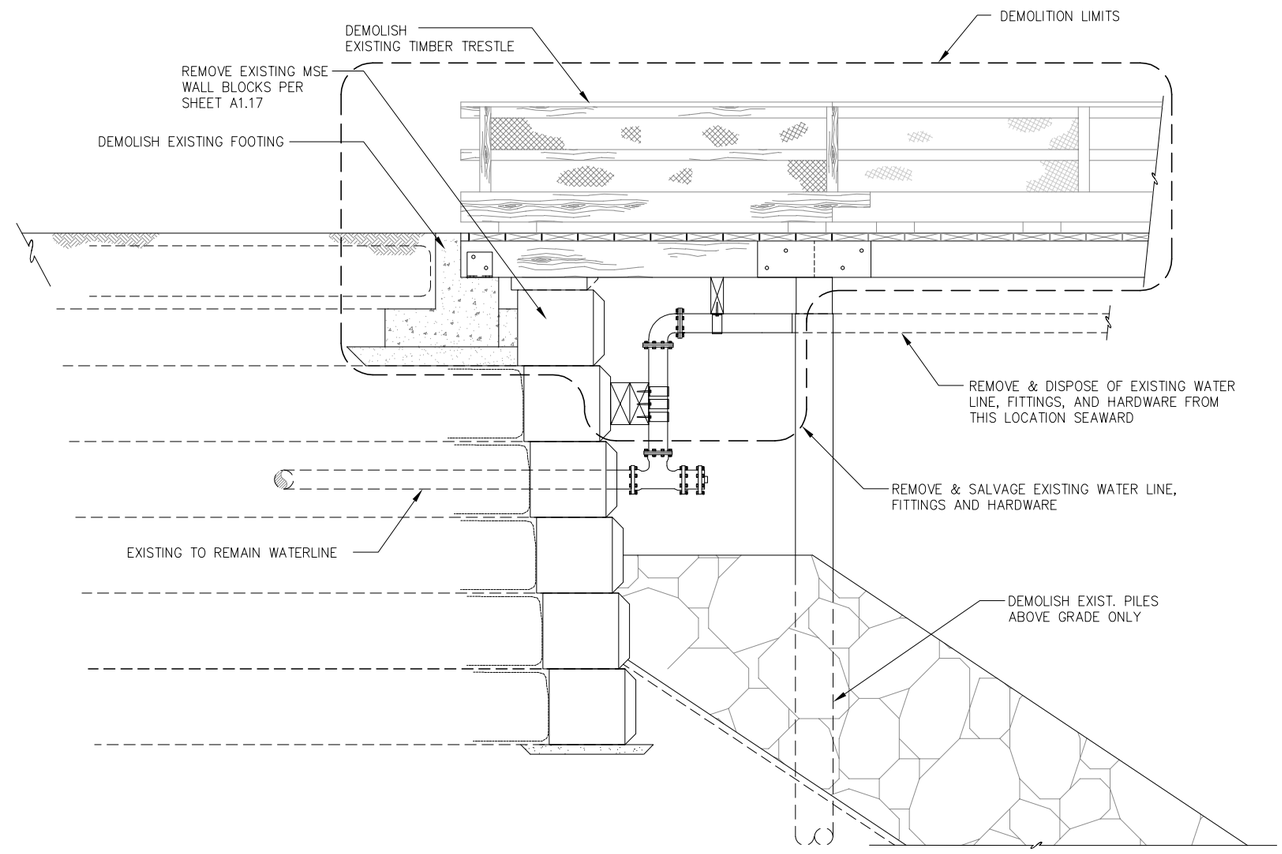

B - **ABUTMENT DEMOLITION SECTION**

SCALE IN FEET
0 2' 4'

65% DESIGN REVIEW SUBMITTAL

REVISIONS

REV.	DATE	DESCRIPTION	DWN.	CKD.	APP.

P N D ENGINEERS, INC.
9360 Glacier Highway Ste 100
Juneau, Alaska 99801
Phone: 907-586-2093
Fax: 907-586-2099
www.pndengineers.com

DESIGN: SRY CHECKED: CRS
DRAWN: SRY APPROVED: CRS
SCALE: AS SHOWN
DATE: 12/7/12

HAINES BOROUGH
PORT CHILKOOT DOCK IMPROVEMENTS - PHASE 2

SHEET TITLE:
ABUTMENT DEMOLITION PLAN

PND PROJECT NO.: 112048.04 DWG. FILE: 1.14.DWG

A1.14
SHEET 14 OF 48

N:\11XXX\112048 Port Chilkoot Dock Trestle Replacement\Drawings\FHD\1.14 - Abutment Demolition Plan.dwg, 12/7/2012 11:56:48 AM, 1:2

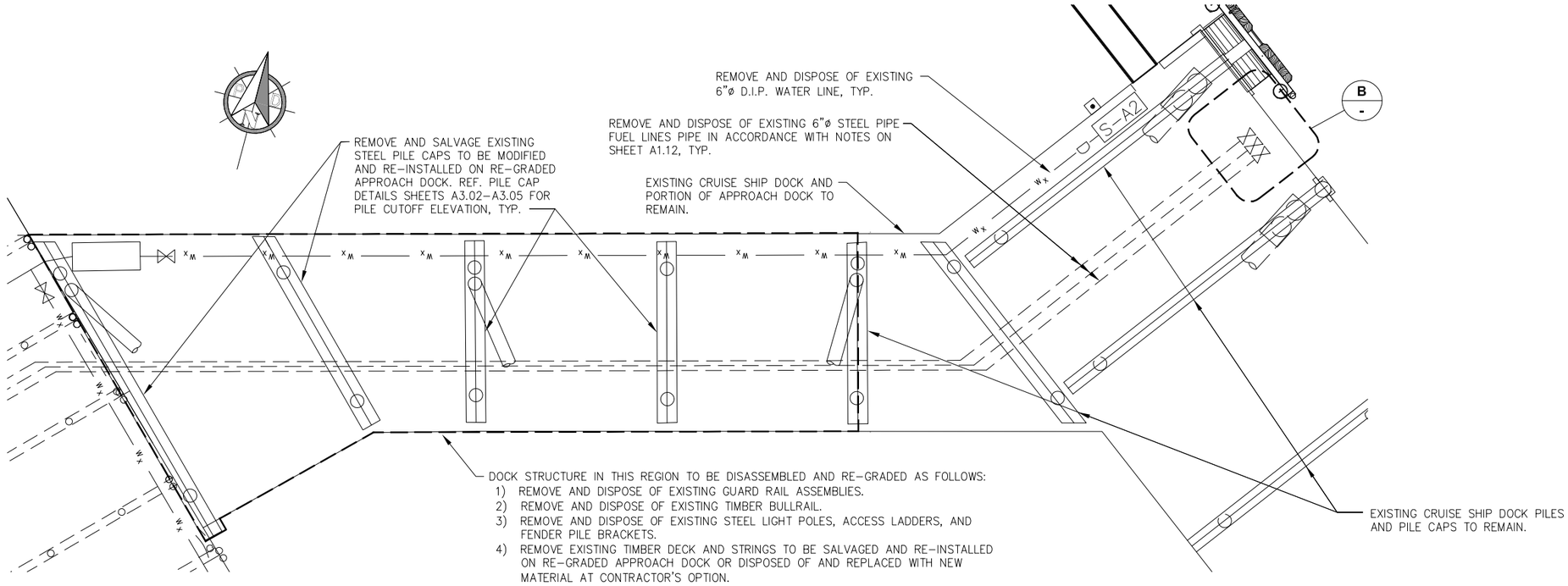

A - **CRUISE SHIP APPROACH DOCK DEMOLITION PLAN**

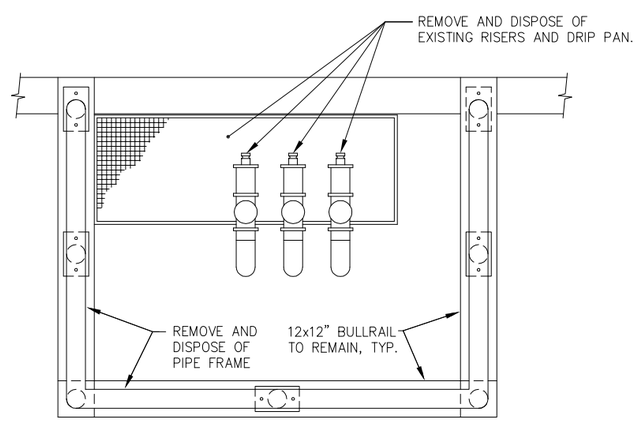

B - **FUEL RISER DEMOLITION PLAN**

65% DESIGN REVIEW SUBMITTAL

REVISIONS

REV.	DATE	DESCRIPTION	DWN.	CKD.	APP.

PND ENGINEERS, INC.
9360 Glacier Highway Ste 100
Juneau, Alaska 99801
Phone: 907-586-2093
Fax: 907-586-2099
www.pndengineers.com

DESIGN: SRY CHECKED: CRS
DRAWN: SRY APPROVED: CRS
SCALE: SCALE IN FEET 0 5 10 FT.
DATE: 12/7/12

HAINES BOROUGH
PORT CHILKOOT DOCK IMPROVEMENTS - PHASE 2

SHEET TITLE: CRUISE SHIP APPROACH DOCK DEMOLITION PLAN

PND PROJECT NO.: 112048.04 DWG. FILE: 1.15.DWG

A1.15

SHEET 15 OF 48

N:\11XXX\112048 Port Chilkoot Dock Trestle Replacement\Drawings\FHD\1.15 - Cruise Ship Approach Dock Demolition Plan.dwg, 12/7/2012 11:56:52 AM, 1:2

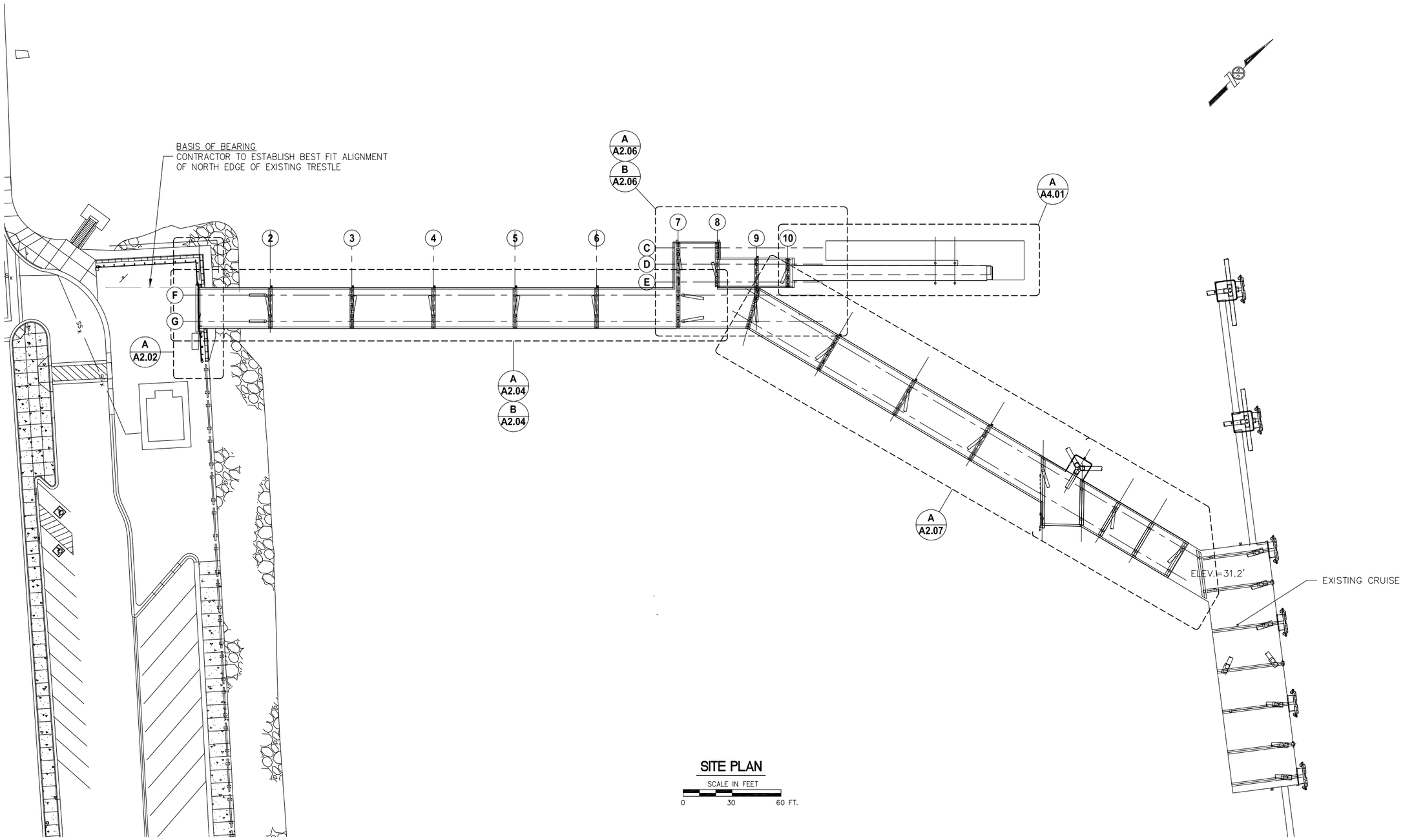

SITE PLAN

SCALE IN FEET

0 30 60 FT.

65% DESIGN REVIEW SUBMITTAL

REVISIONS

REV.	DATE	DESCRIPTION	DWN.	CKD.	APP.

PND ENGINEERS, INC.
9360 Glacier Highway Ste 100
Juneau, Alaska 99801
Phone: 907-586-2093
Fax: 907-586-2099
www.pndengineers.com

DESIGN: SRY CHECKED: CRS
DRAWN: SRY APPROVED: CRS
SCALE: SCALE (FEET) 0 40 80
DATE: 12/7/12

HAINES BOROUGH
PORT CHILKOOT DOCK IMPROVEMENTS - PHASE 2

SHEET TITLE: **SITE PLAN**

PND PROJECT NO.: 112048.04 DWG. FILE: 2.01.DWG

A2.01

SHEET 16 OF 48

H:\11XXX\112048 Port Chilkoot Dock Trestle Replacement\Drawings\PND\2.01, 2.04-2.07 Site, Foundation and Framing Plans.dwg,
12/7/2012 11:56:59 AM 1:2

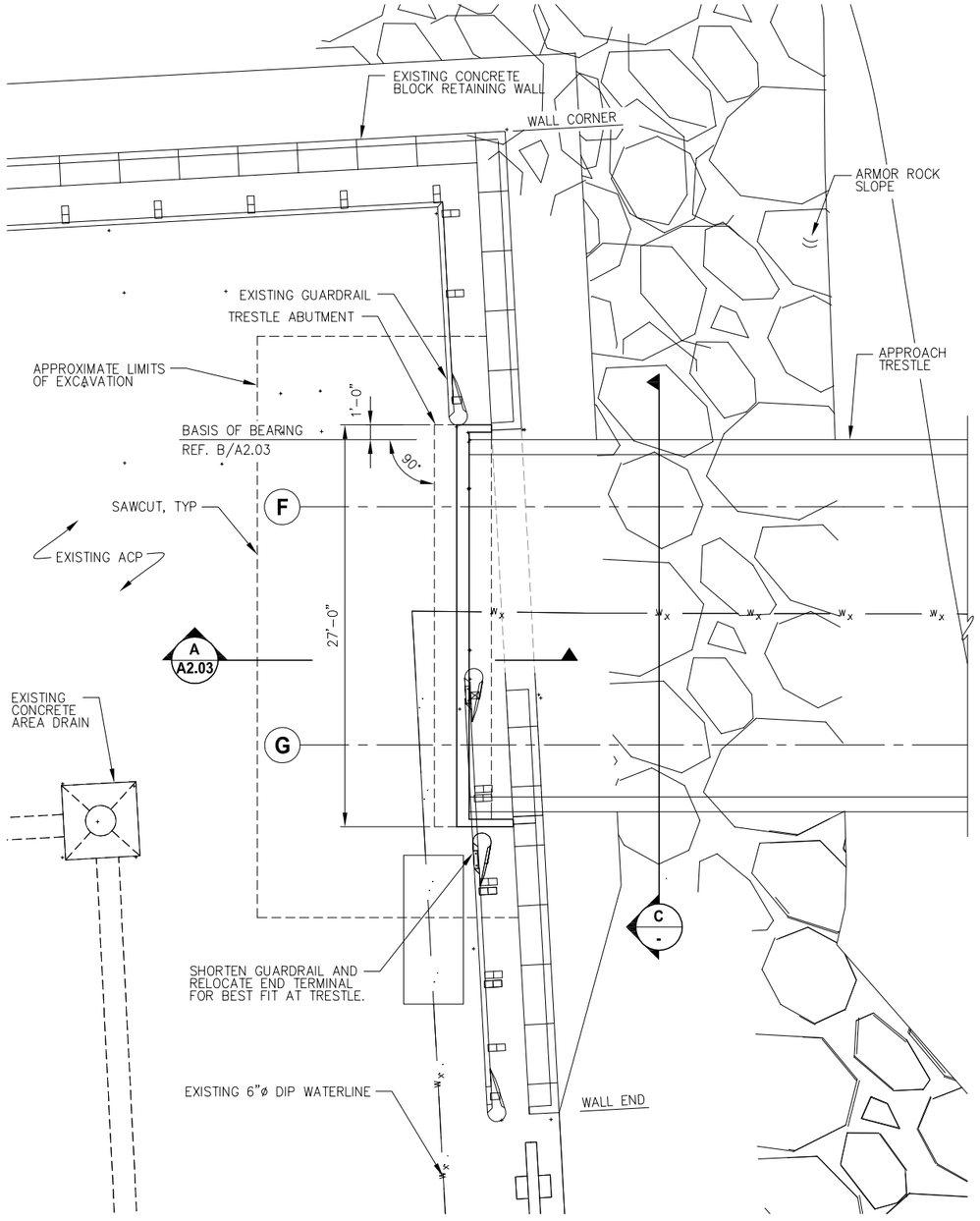

A - RETAINING WALL RECONFIGURATION - PLAN

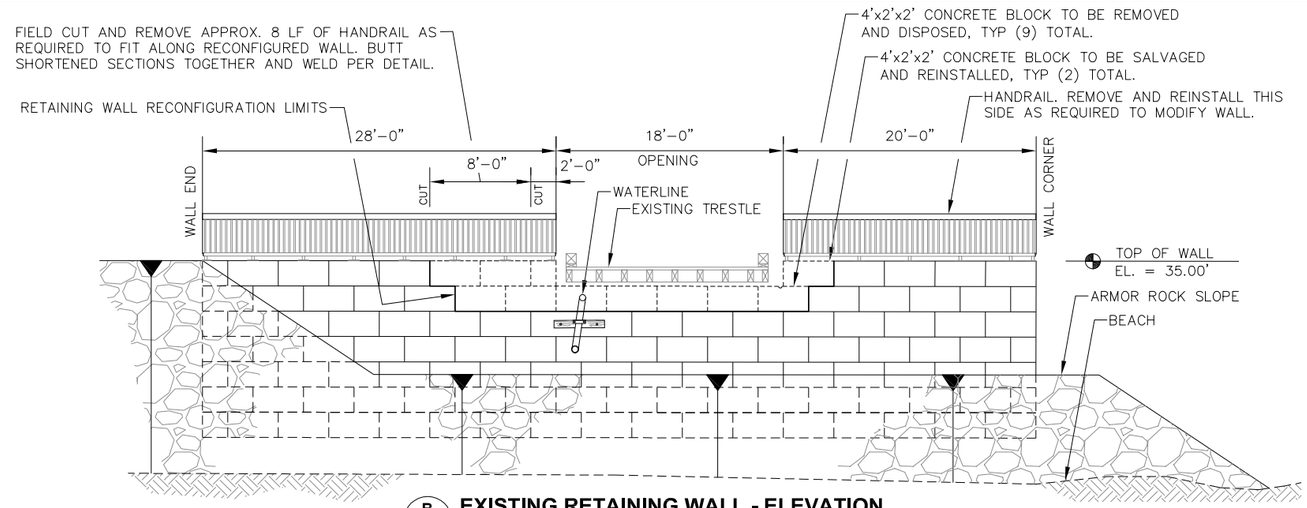

B - EXISTING RETAINING WALL - ELEVATION

NOTE: APPROACH TRESTLE NOT SHOWN THIS VIEW.

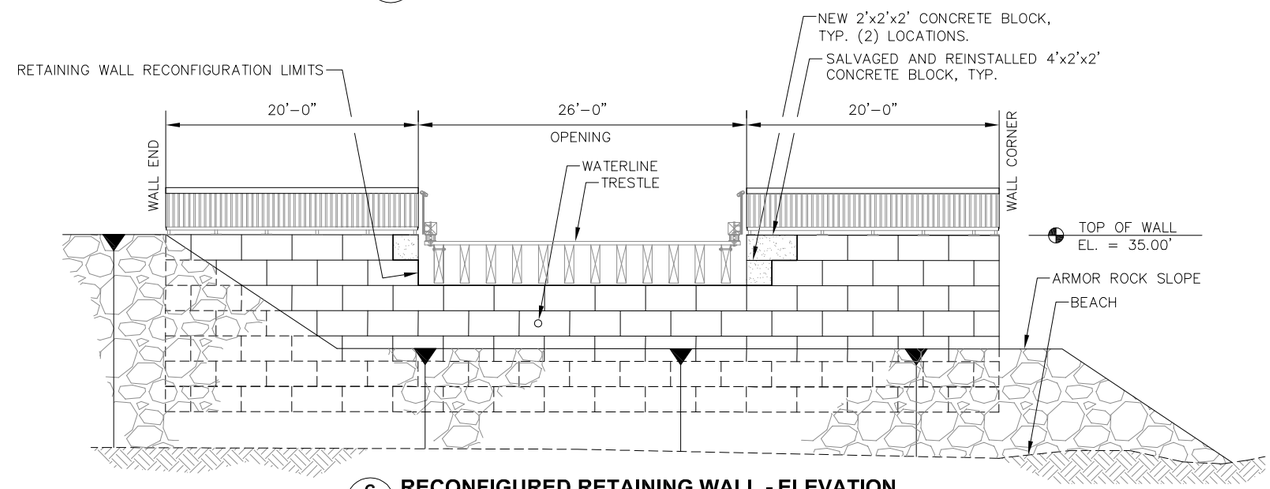

C - RECONFIGURED RETAINING WALL - ELEVATION

NOTE: APPROACH TRESTLE NOT SHOWN THIS VIEW.

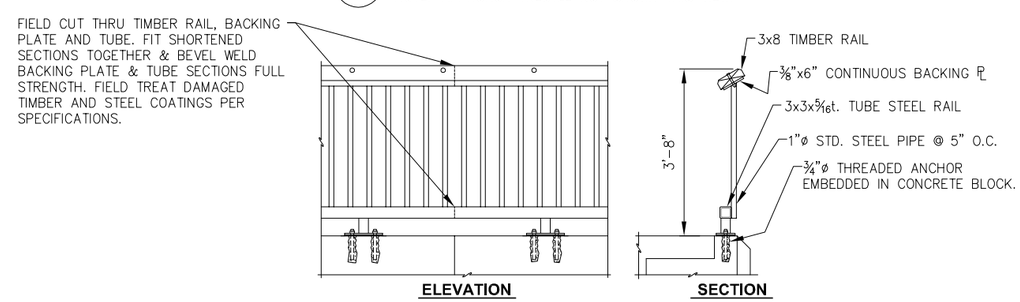

HANDRAIL MODIFICATIONS

65% DESIGN REVIEW SUBMITTAL

REVISIONS

REV.	DATE	DESCRIPTION	DWN.	CKD.	APP.

PND ENGINEERS, INC.
9360 Glacier Highway Ste 100
Juneau, Alaska 99801
Phone: 907-586-2093
Fax: 907-586-2099
www.pndengineers.com

DESIGN: SRY CHECKED: CRS
DRAWN: SRY APPROVED: CRS
SCALE:
DATE: 12/7/12

HAINES BOROUGH
PORT CHILKOOT DOCK IMPROVEMENTS - PHASE 2

SHEET TITLE: ABUTMENT PLAN AND RETAINING WALL ELAVATIONS

PND PROJECT NO.: 112048.04 DWG. FILE: 2.02.DWG

A2.02

N:\11XXX\112048 Port Chilkoot Dock Trestle Replacement\Drawings\PND 2.02 - Abutment Plan and Retaining Wall Elevations.dwg, 12/7/2012 11:57:08 AM, 1:2

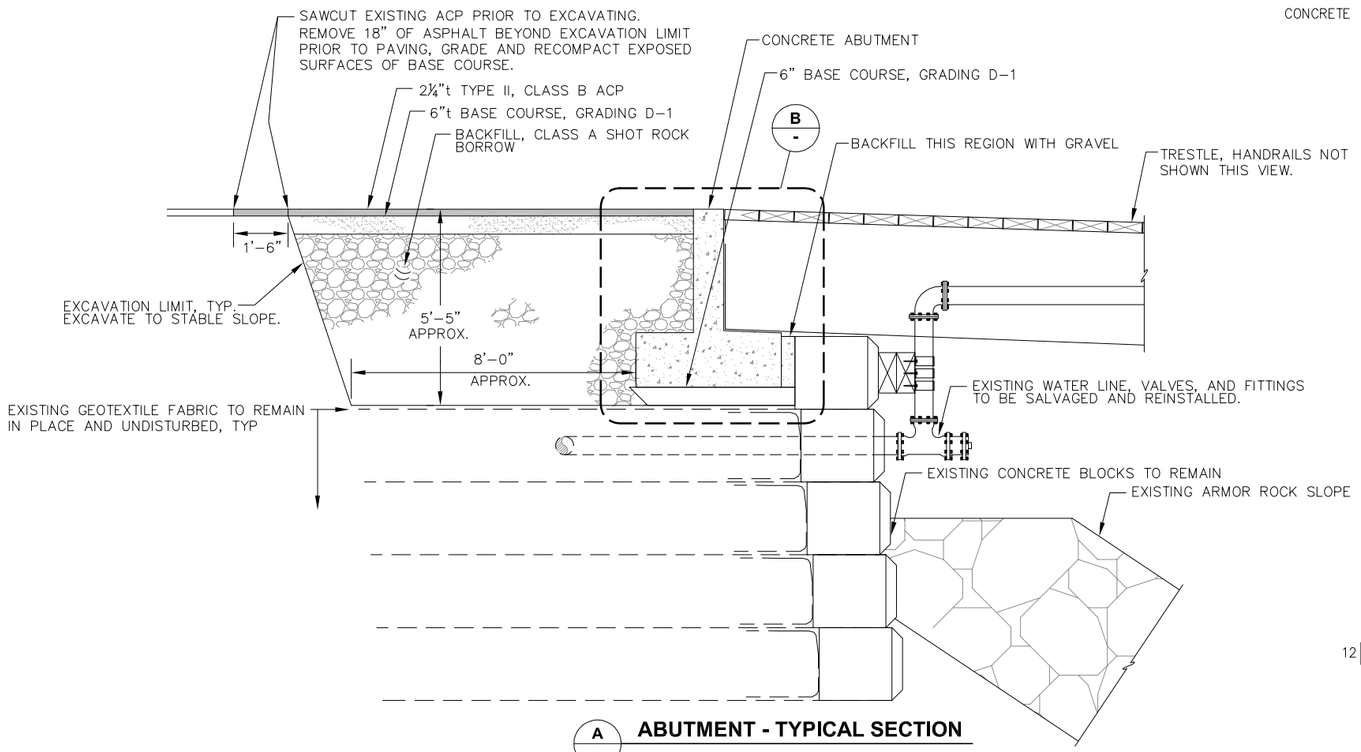

A - **ABUTMENT - TYPICAL SECTION**

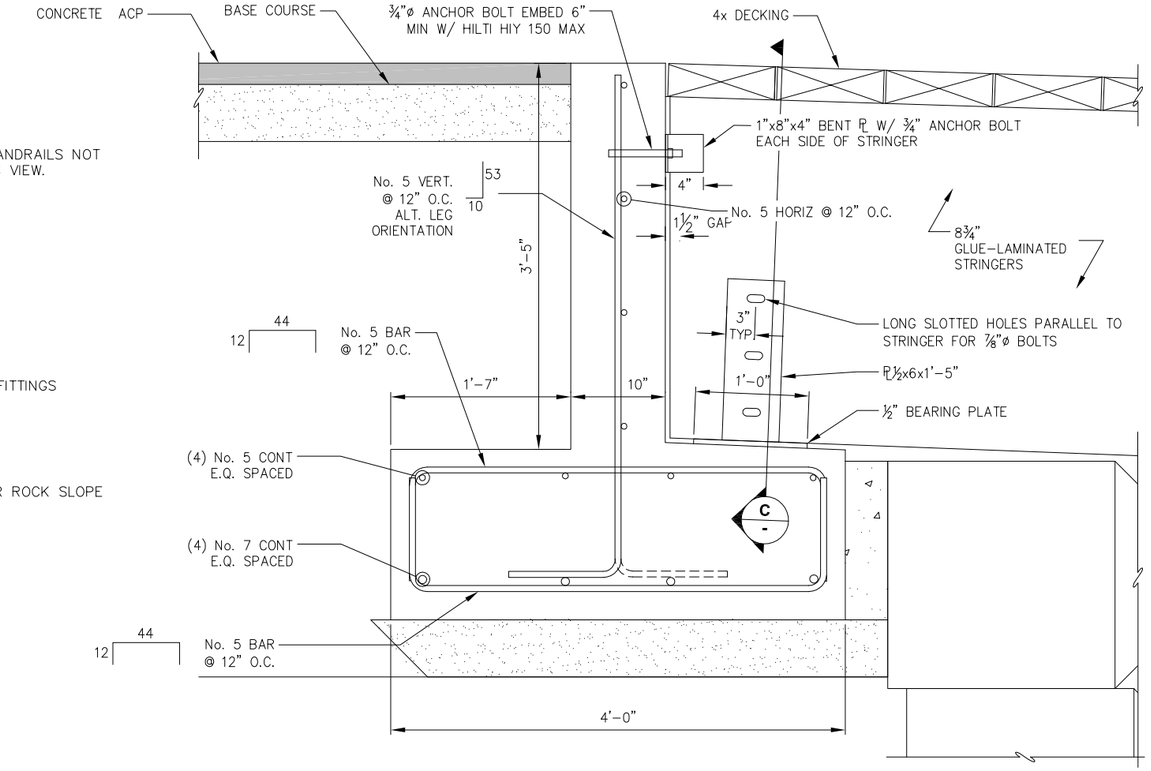

B - **ABUTMENT - TYPICAL SECTION**

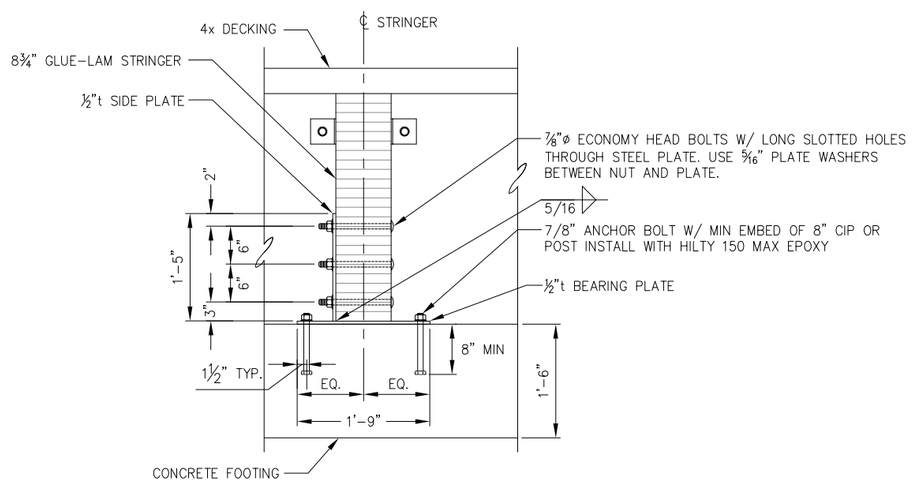

C - **STRINGER BEARING PLATE DETAIL**

65% DESIGN REVIEW SUBMITTAL

REVISIONS

REV.	DATE	DESCRIPTION	DWN.	CKD.	APP.

PND ENGINEERS, INC.
9360 Glacier Highway Ste 100
Juneau, Alaska 99801
Phone: 907-586-2093
Fax: 907-586-2099
www.pndengineers.com

DESIGN: SRY CHECKED: CRS
DRAWN: SRY APPROVED: CRS
SCALE:
DATE: 12/7/12

HAINES BOROUGH
PORT CHILKOOT DOCK IMPROVEMENTS - PHASE 2

SHEET TITLE: ABUTMENT SECTION

PND PROJECT NO.: 112048.04 DWG. FILE: 2.03.DWG

A2.03
SHEET 18 OF 48

N:\11XXX\112048 Port Chilkoot Dock Trestle Replacement\Drawings\PHD\2.03 - Abutment Section.dwg, 12/7/2012 11:57:16 AM, 1:2

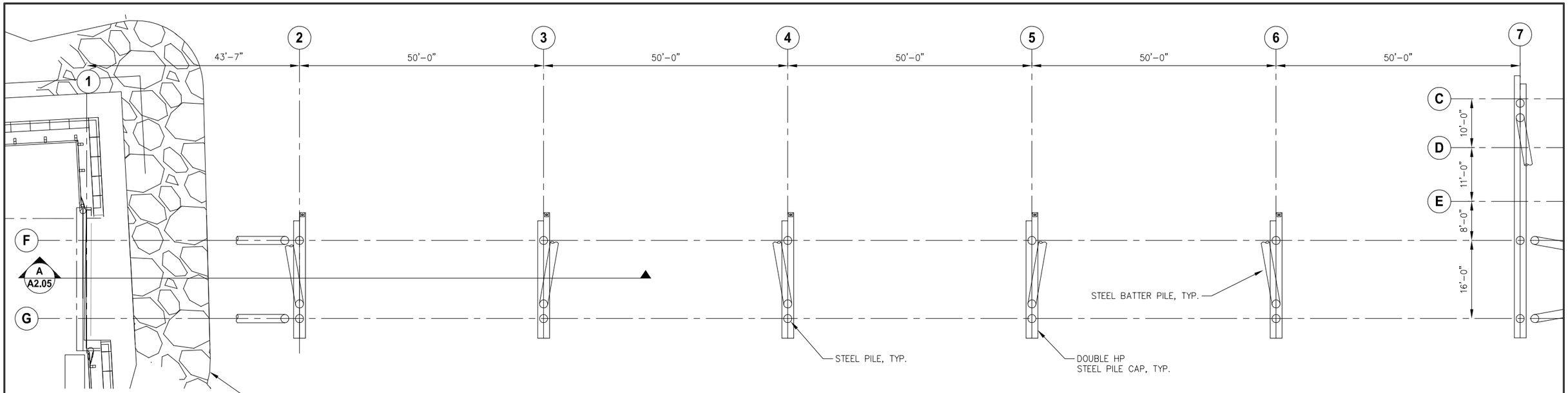

A – TRESTLE FOUNDATION PLAN

SCALE IN FEET
0 4 8 FT.

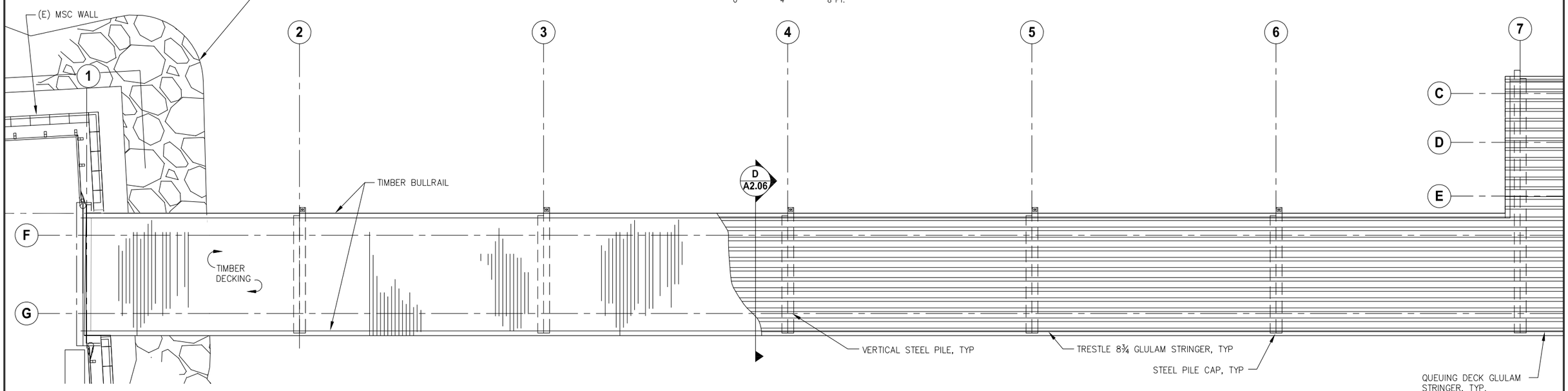

B – TRESTLE FRAMING PLAN

SCALE IN FEET
0 4 8 FT.

65% DESIGN REVIEW SUBMITTAL

REVISIONS

REV.	DATE	DESCRIPTION	DWN.	CKD.	APP.

PND ENGINEERS, INC.
9360 Glacier Highway Ste 100
Juneau, Alaska 99801
Phone: 907-586-2093
Fax: 907-586-2099
www.pndengineers.com

DESIGN: SRY CHECKED: CRS
DRAWN: SRY APPROVED: CRS
SCALE: SCALE (FEET) 0 40 80
DATE: 12/7/12

HAINES BOROUGH
PORT CHILKOOT DOCK
IMPROVEMENTS - PHASE 2

SHEET TITLE:
TRESTLE FOUNDATION AND FRAMING PLANS

PND PROJECT NO.: 112048.04 DWG. FILE: 2.01.DWG

A2.04
SHEET 19 OF 48

N:\11XXX\112048 Port Chilkoot Dock Trestle Replacement\Drawings\PND\2.01, 2.04-2.07 Site, Foundation and Framing Plans.dwg,
12/7/2012 11:57:24 AM, 1:2

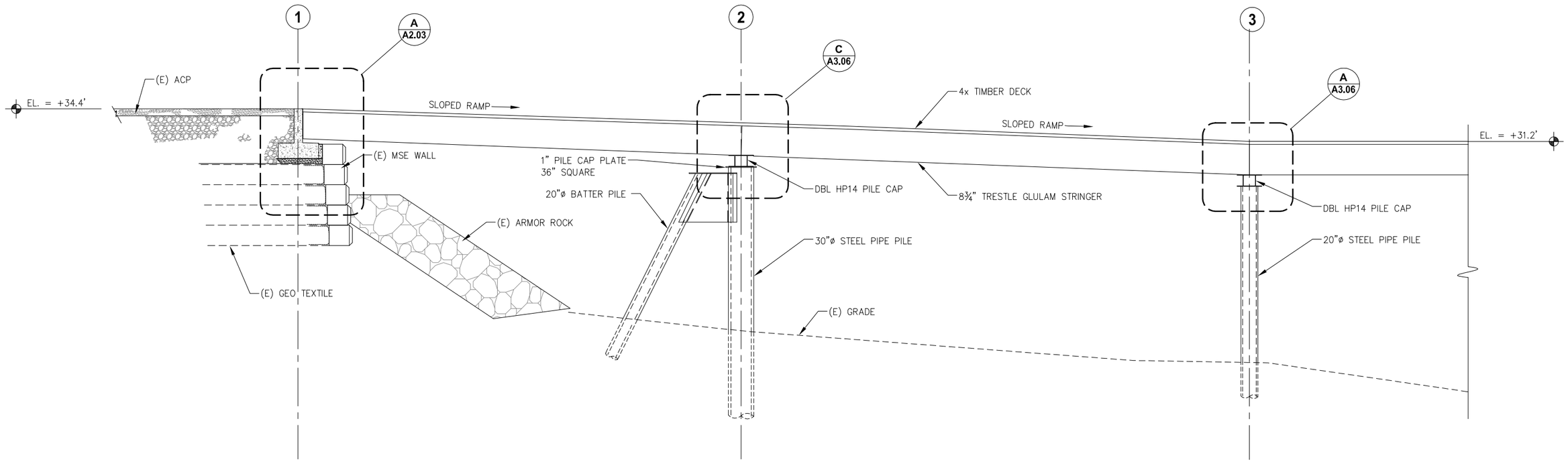

A / - RAMP ELEVATION AT TRESTLE ABUTMENT

SCALE IN FEET
0 4 8 FT.

65% DESIGN REVIEW SUBMITTAL

REVISIONS

REV.	DATE	DESCRIPTION	DWN.	CKD.	APP.

PND ENGINEERS, INC.
9360 Glacier Highway Ste 100
Juneau, Alaska 99801
Phone: 907-586-2093
Fax: 907-586-2099
www.pndengineers.com

DESIGN: SRY CHECKED: CRS
DRAWN: SRY APPROVED: CRS
SCALE: SCALE (FEET) 0 40 80
DATE: 12/7/12

HAINES BOROUGH
PORT CHILKOOT DOCK
IMPROVEMENTS - PHASE 2

SHEET TITLE:
RAMP ELEVATION AT TRESTLE ABUTMENT

PND PROJECT NO.: 112048.04 DWG. FILE: 2.01.DWG

A2.05
SHEET 20 OF 48

H:\11XXX\112048 Port Chilkoot Dock Trestle Replacement\Drawings\PND\2.01, 2.04-2.07 Site, Foundation and Framing Plans.dwg, 12/7/2012 11:57:30 AM, 1:2

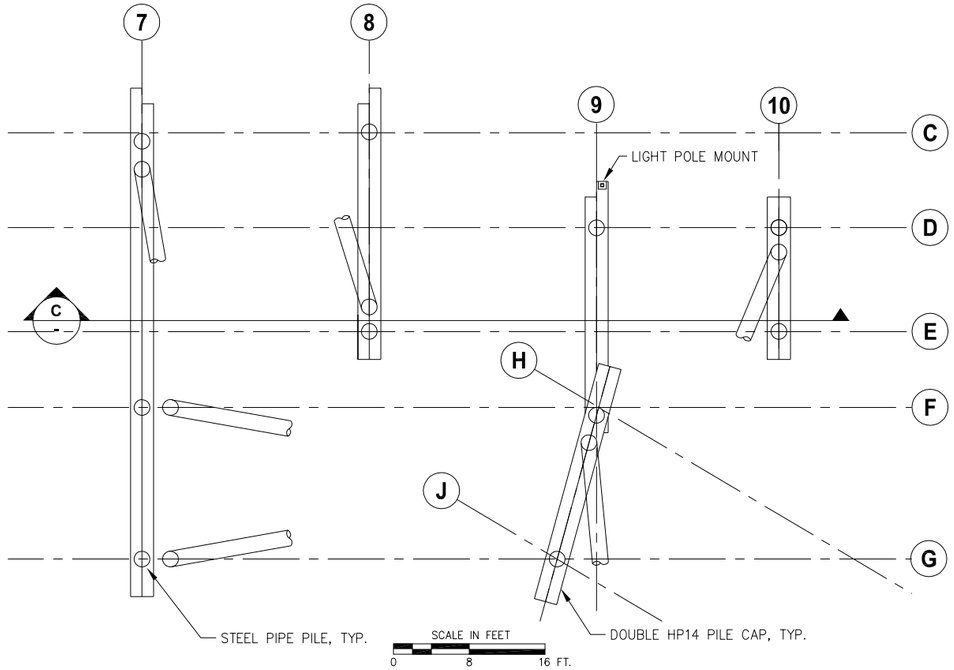

A - GANGWAY QUEUING DECK FOUNDATION PLAN

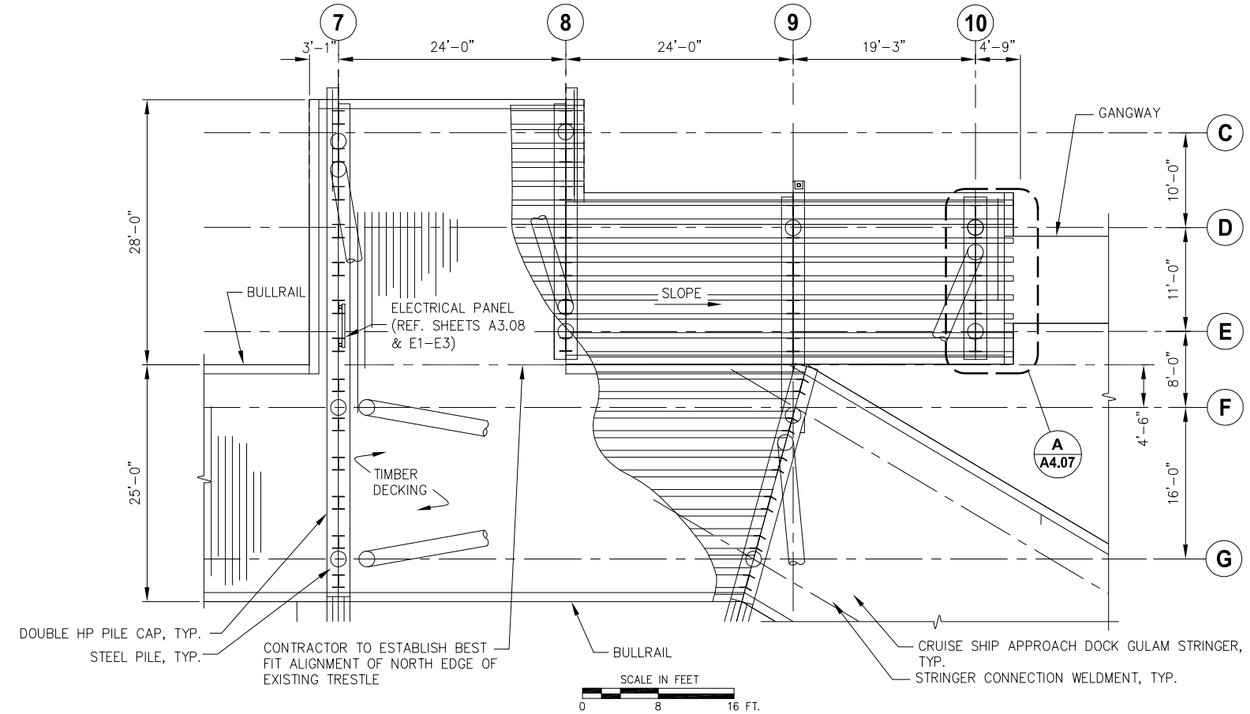

B - GANGWAY QUEUING DECK FRAMING PLAN

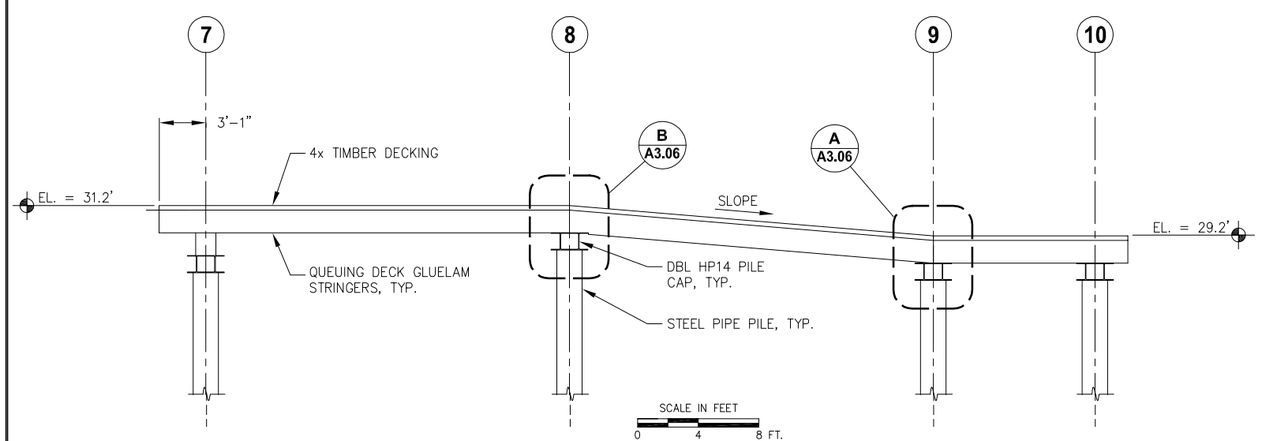

C - QUEUING DECK GANGWAY RAMP CONNECTION TO SECTION

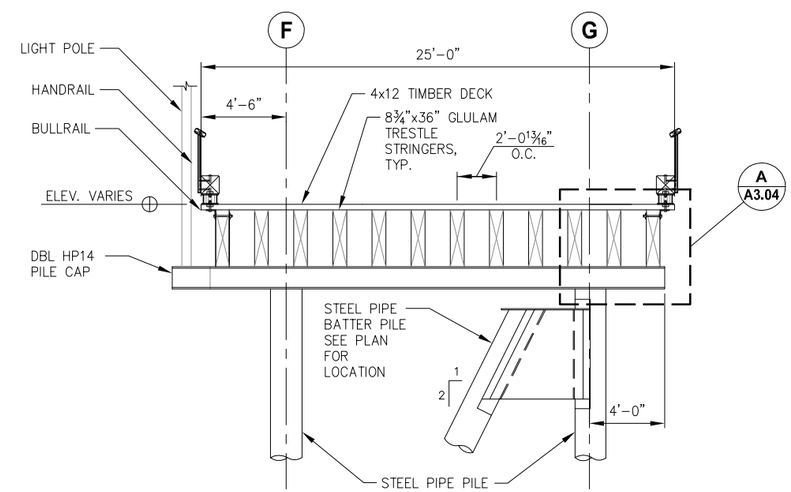

D - TYPICAL TRESTLE SECTION

65% DESIGN REVIEW SUBMITTAL

REVISIONS

REV.	DATE	DESCRIPTION	DWN.	CKD.	APP.

PND ENGINEERS, INC.
9360 Glacier Highway Ste 100
Juneau, Alaska 99801
Phone: 907-586-2093
Fax: 907-586-2099
www.pndengineers.com

DESIGN: SRY CHECKED: CRS
DRAWN: SRY APPROVED: CRS
SCALE: AS SHOWN
DATE: 12/7/12

HAINES BOROUGH
PORT CHILKOOT DOCK IMPROVEMENTS - PHASE 2

SHEET TITLE: GANGWAY QUEUING AREA FOUNDATION AND FRAMING PLANS

PND PROJECT NO.: 112048.04 DWG. FILE: 2.01.DWG

A2.06

SHEET 21 OF 48

H:\11XXX\112048 Port Chilkoot Dock Trestle Replacement\Drawings\PND\2.01, 2.04-2.07 Site, Foundation and Framing Plans.dwg, 12/7/2012 11:57:35 AM, 1:2

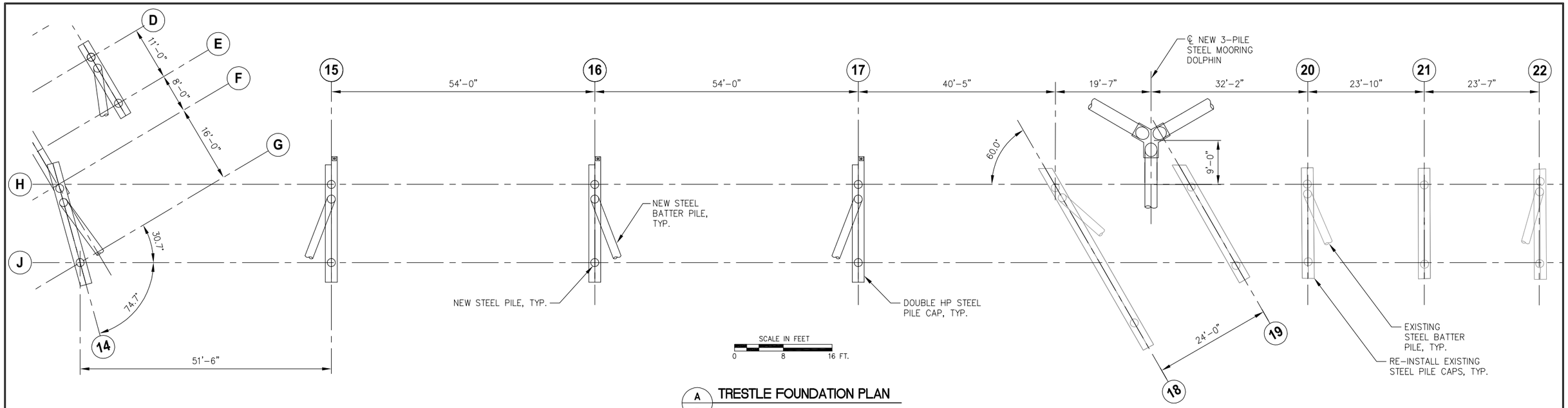

A - TRESTLE FOUNDATION PLAN

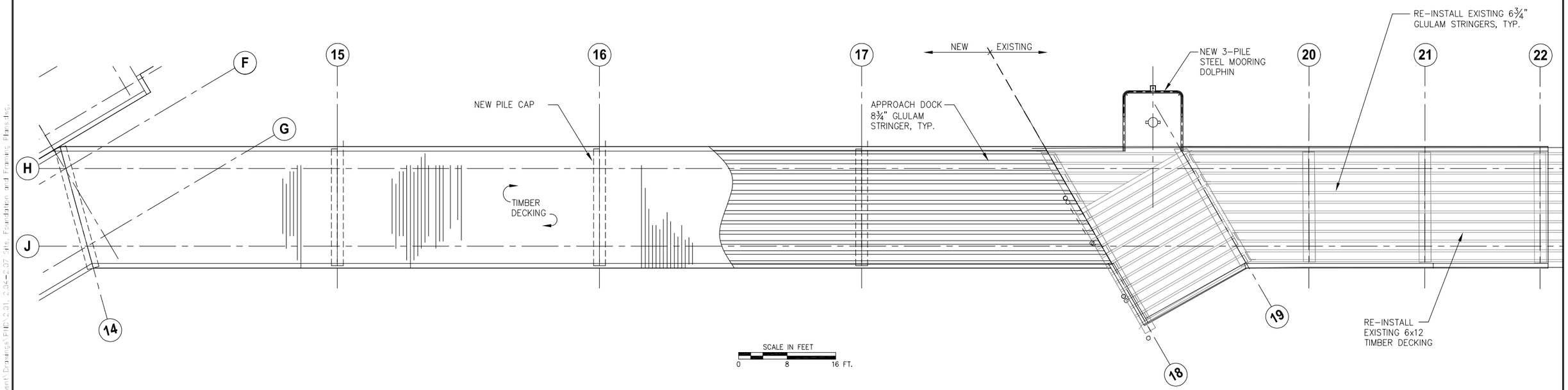

B - TRESTLE FRAMING PLAN

65% DESIGN REVIEW SUBMITTAL

REVISIONS

REV.	DATE	DESCRIPTION	DWN.	CKD.	APP.

PND ENGINEERS, INC.
9360 Glacier Highway Ste 100
Juneau, Alaska 99801
Phone: 907-586-2093
Fax: 907-586-2099
www.pndengineers.com

DESIGN: SRY CHECKED: CRS
DRAWN: SRY APPROVED: CRS
SCALE: SCALE (FEET) 0 40 80
DATE: 12/7/12

HAINES BOROUGH
PORT CHILKOOT DOCK
IMPROVEMENTS - PHASE 2

SHEET TITLE:
CRUISE SHIP APPROACH DOCK
FOUNDATION AND FRAMING PLANS

PND PROJECT NO.: 112048.04 DWG. FILE: 2.01.DWG

A2.07
SHEET 22 OF 48

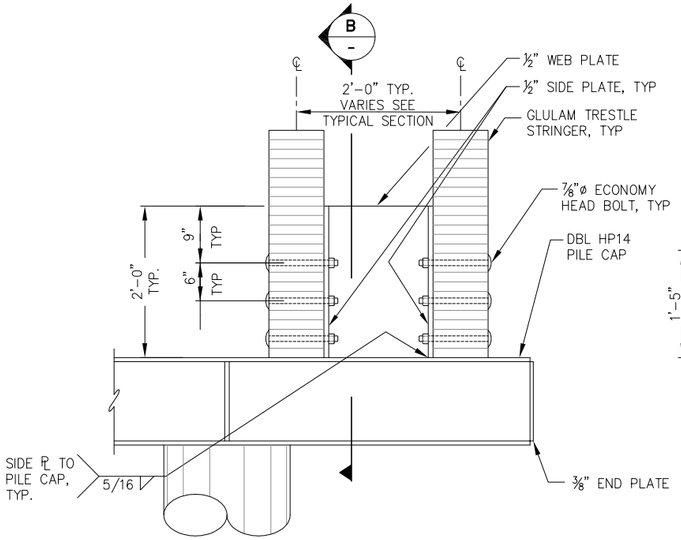

A - TYPICAL STRINGER CONNECTION ELEVATION FOR 8-3/4" GLULAM STRINGERS

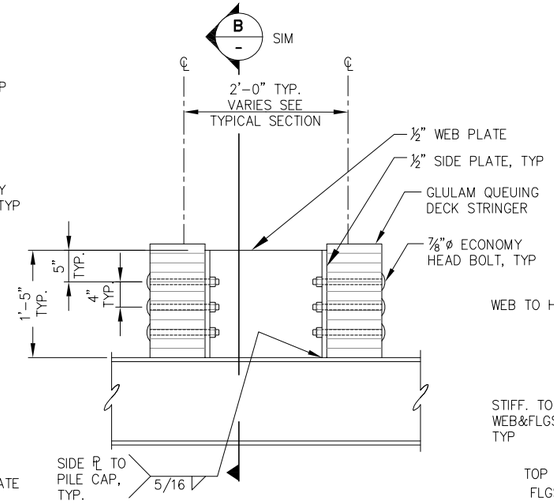

B - TYPICAL STRINGER CONNECTION ELEVATION FOR 6-3/4" GLULAM STRINGERS

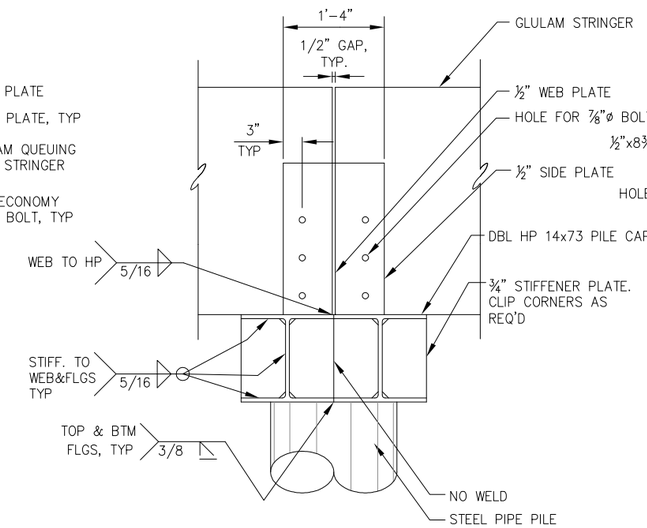

C - TYPICAL STRINGER CONNECTION SECTION

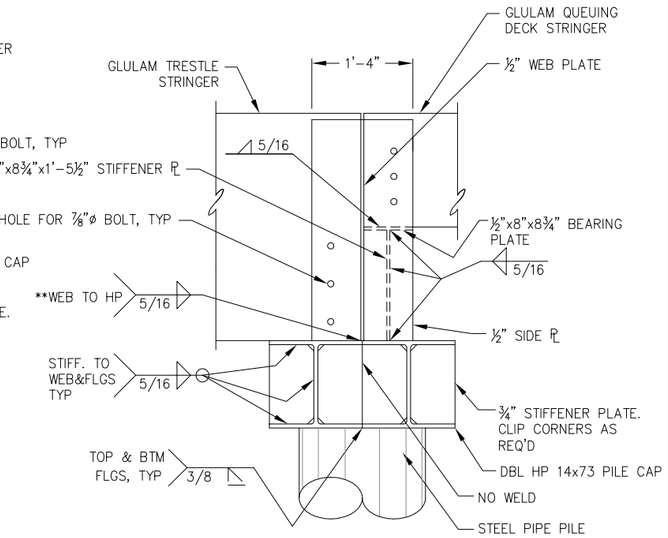

D - STRINGER CONNECTION SECTION AT GRID 7

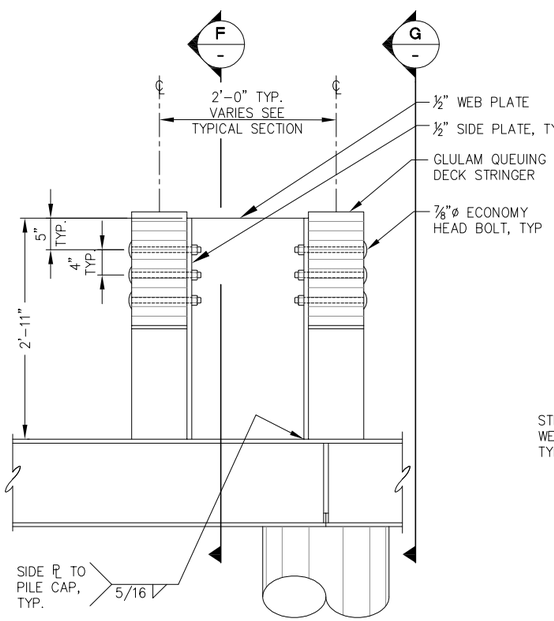

E - STRINGER CONNECTION SECTION AT GRID 7

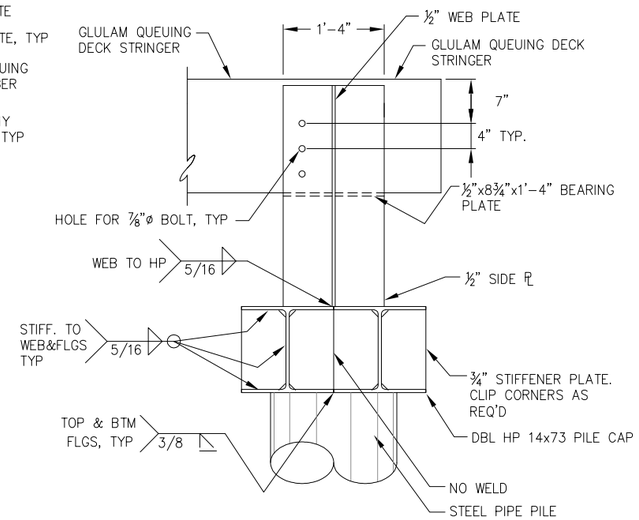

F - STRINGER CONNECTION SECTION AT GRID 7

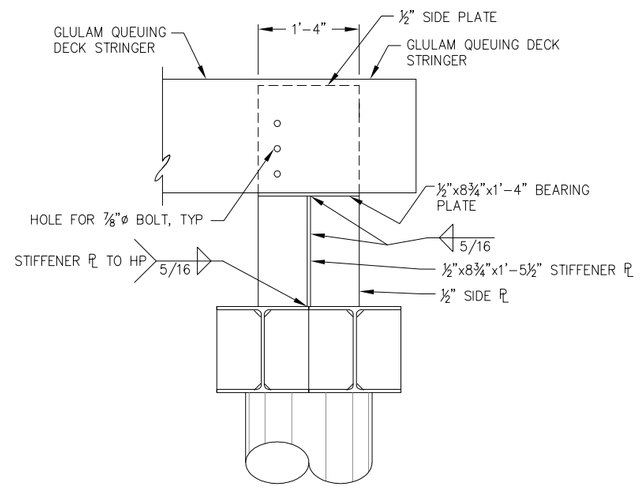

G - STRINGER CONNECTION SECTION AT GRID 7

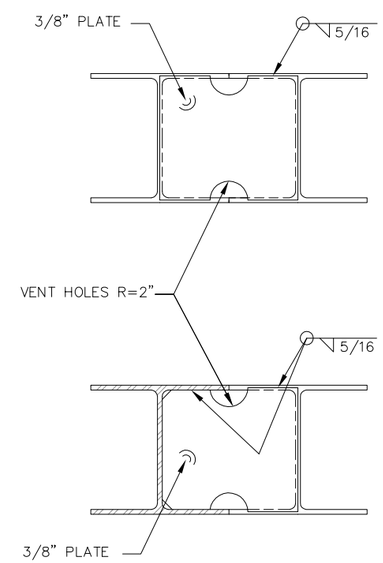

H - PILE CAP COVER PLATE

65% DESIGN REVIEW SUBMITTAL

REVISIONS

REV.	DATE	DESCRIPTION	DWN.	CKD.	APP.

P N D ENGINEERS, INC.
9360 Glacier Highway Ste 100
Juneau, Alaska 99801
Phone: 907-586-2093
Fax: 907-586-2099
www.pndengineers.com

DESIGN: MDS CHECKED: CMG
DRAWN: MDS APPROVED: CRS
SCALE: NTS
DATE: 12/7/12

HAINES BOROUGH
PORT CHILKOOT DOCK
IMPROVEMENTS - PHASE 2

SHEET TITLE: FRAMING DETAILS

PND PROJECT NO.: 112048.04 DWG. FILE: 3.04.DWG

A3.01

SHEET 23 OF 48

N:\1XXX\112048 Port Chilkoot Dock Trestle Replacement\Drawings\PND\3.01 - Framing Details.dwg, 12/7/2012 11:57:49 AM, 1:2

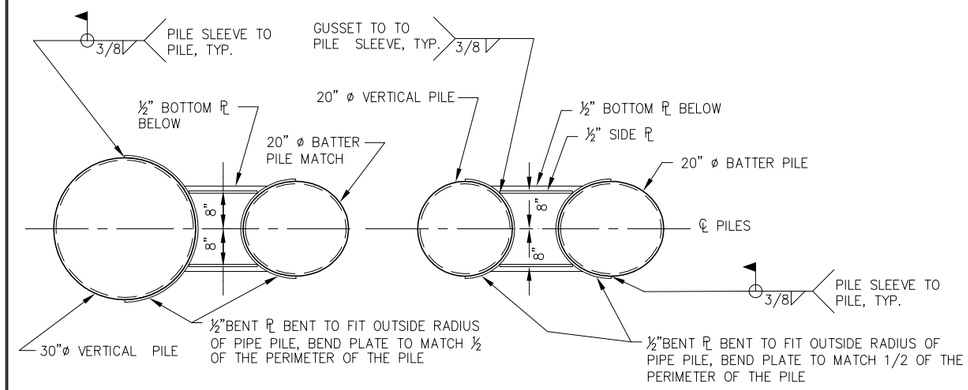

SECTION W/30" DIA VERTICAL PILE | **SECTION W/20" DIA VERTICAL PILE**

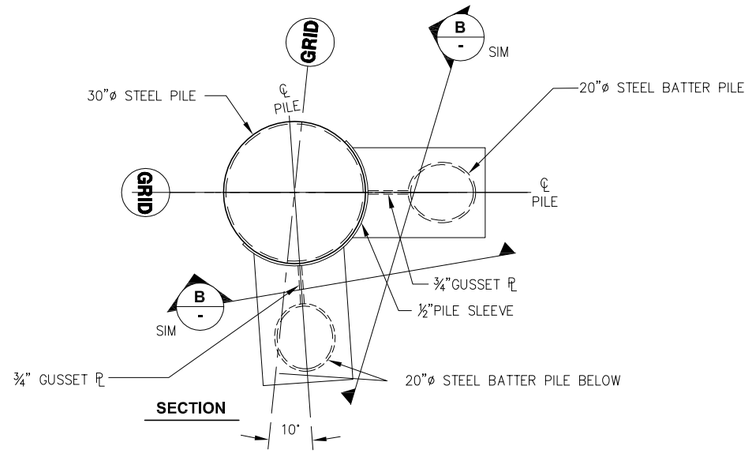

SECTION

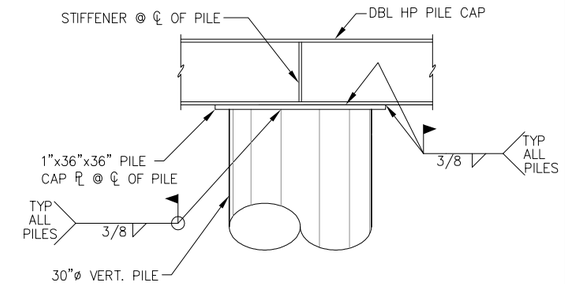

C - TYPICAL 30" DIAMETER VERTICAL PILE CONNECTION TO PILE CAP

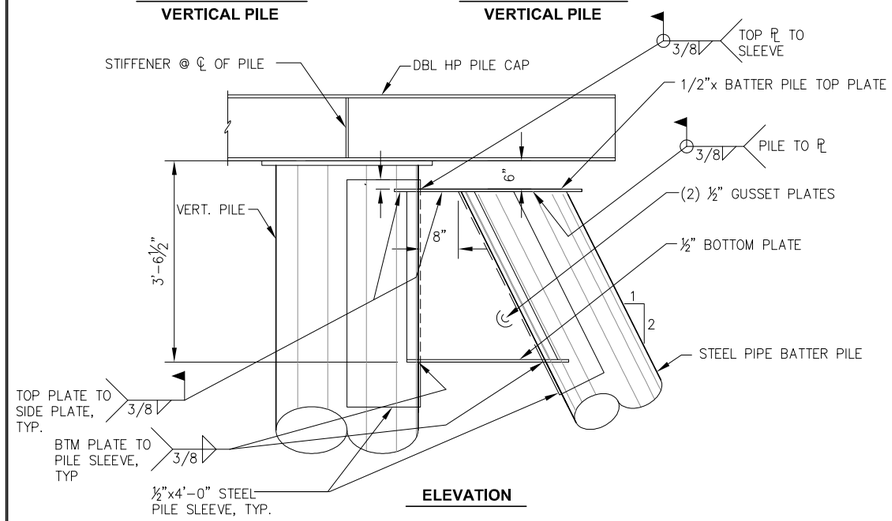

ELEVATION

A - TYPICAL SINGLE BATTER PILE CONNECTION

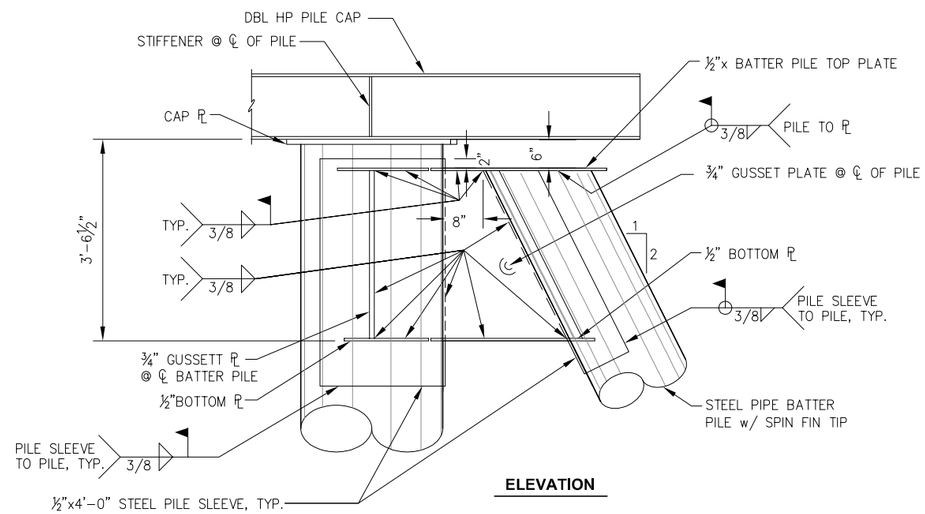

ELEVATION

B - TYPICAL DOUBLE BATTER PILE CONNECTION

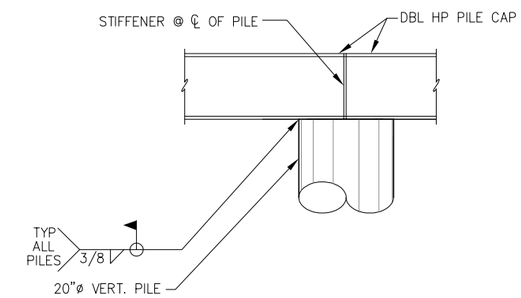

D - TYPICAL 20" DIAMETER VERTICAL PILE CONNECTION TO PILE CAP

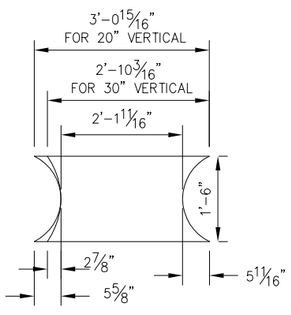

D - TYPICAL BOTTOM PLATE DETAIL FOR SINGLE BATTER PILE CONNECTION

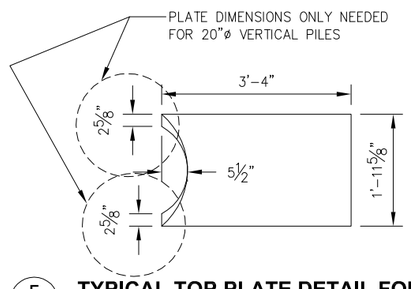

E - TYPICAL TOP PLATE DETAIL FOR SINGLE BATTER PILE CONNECTION

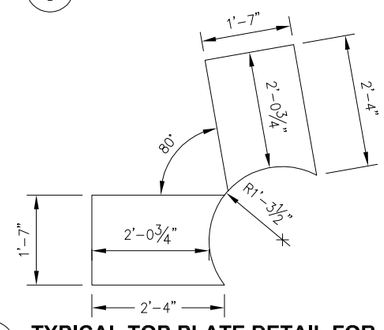

F - TYPICAL TOP PLATE DETAIL FOR DOUBLE BATTER PILE CONNECTION

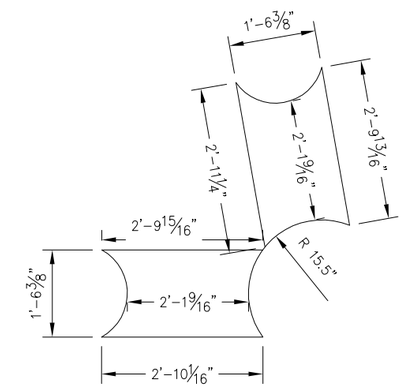

G - TYPICAL BOTTOM PLATE DETAIL FOR DOUBLE BATTER PILE CONNECTION

65% DESIGN REVIEW SUBMITTAL

REVISIONS

REV.	DATE	DESCRIPTION	DWN.	CKD.	APP.

PND ENGINEERS, INC.
9360 Glacier Highway Ste 100
Juneau, Alaska 99801
Phone: 907-586-2093
Fax: 907-586-2099
www.pndengineers.com

DESIGN: SRY CHECKED: CRS
DRAWN: SRY APPROVED: CRS
SCALE: NTS
DATE: 12/7/12

HAINES BOROUGH
PORT CHILKOOT DOCK IMPROVEMENTS - PHASE 2

SHEET TITLE: FRAMING DETAILS

PND PROJECT NO.: 112048.04 DWG. FILE: 3.02.DWG

A3.02
SHEET 24 OF 48

N:\ 11XXX\ 112048 Port Chilkoot Dock Trestle Replacement\ Drawings\ FHD\ 3.02 - Framing Details.dwg, 12/7/2012 11:57:50 AM, 1:2

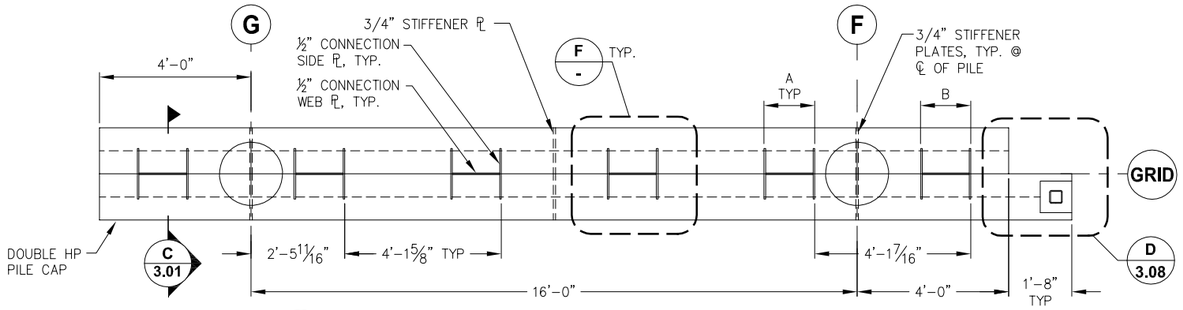

A - GRID 2-6 PILE CAP PLAN

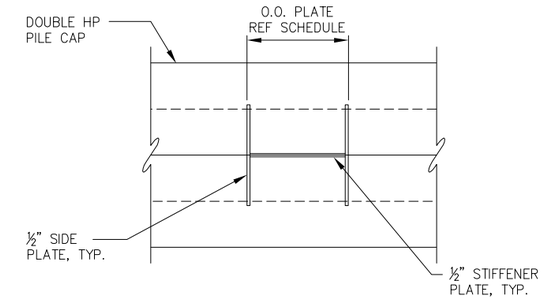

F - STRINGER CONNECTION PLAN
NTS

STRINGER CONNECTION O.O. PLATE SCHEDULE	
TYPE	DIMENSION
A	1'-4 1/16"
B	1'-3 7/8"
C	1'-6 3/8"
D	1'-5 1/4"

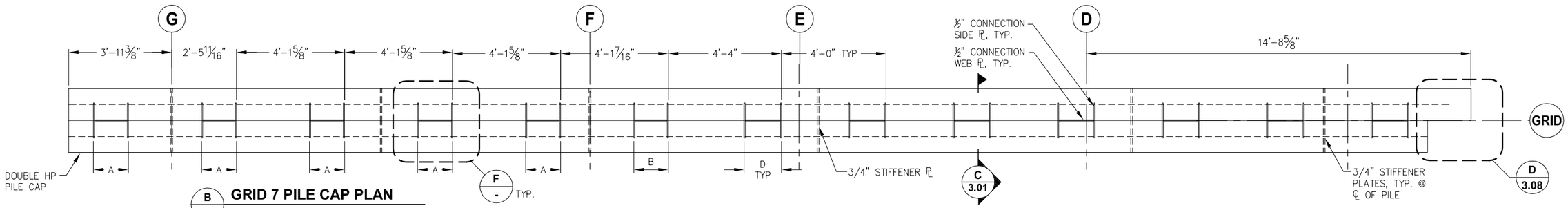

B - GRID 7 PILE CAP PLAN

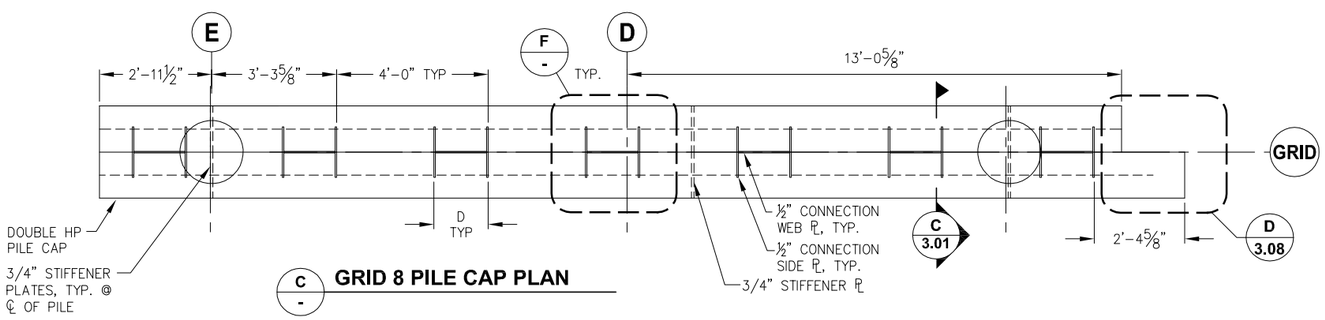

C - GRID 8 PILE CAP PLAN

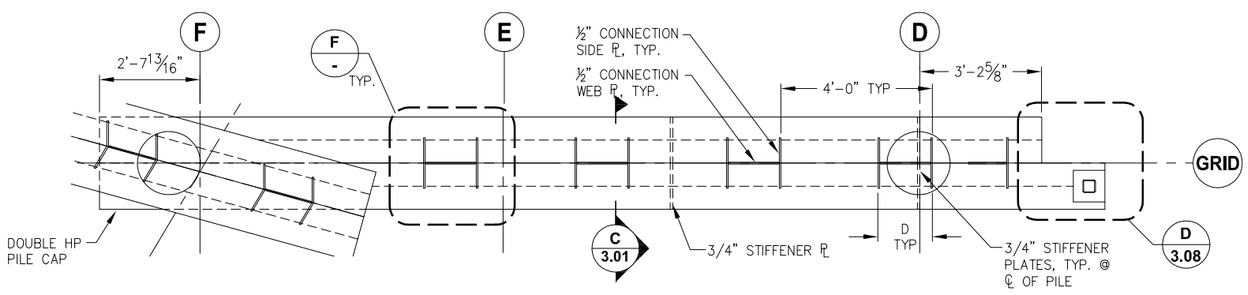

D - GRID 9 PILE CAP PLAN

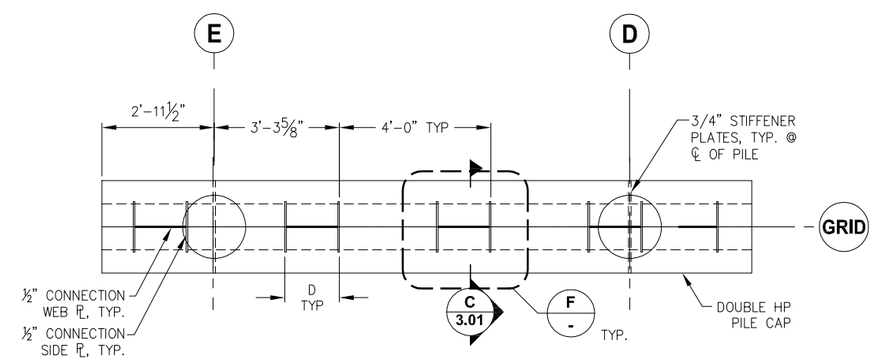

E - GRID 10 PILE CAP PLAN

65% DESIGN REVIEW SUBMITTAL

REVISIONS

REV.	DATE	DESCRIPTION	DWN.	CKD.	APP.

PND ENGINEERS, INC.
9360 Glacier Highway Ste 100
Juneau, Alaska 99801
Phone: 907-586-2093
Fax: 907-586-2099
www.pndengineers.com

DESIGN: SRY CHECKED: CRS
DRAWN: SRY APPROVED: CRS
SCALE: NTS
DATE: 12/7/12

HAINES BOROUGH
PORT CHILKOOT DOCK IMPROVEMENTS - PHASE 2

SHEET TITLE: PILE CAP DETAILS

PND PROJECT NO.: 112048.04 DWG. FILE: 3.04.DWG

A3.04
SHEET 26 OF 48

N:\11XXX\112048 Port Chilkoot Dock Trestle Replacement\Drawings\FHD 3.04 - 3.05 File Cap Details.dwg, 12/7/2012 11:58:02 AM, 1:2

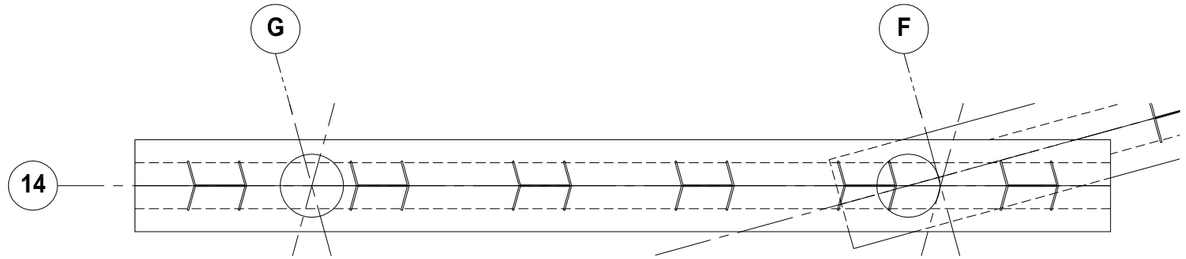

A / - GRID 14 PILE CAP PLAN

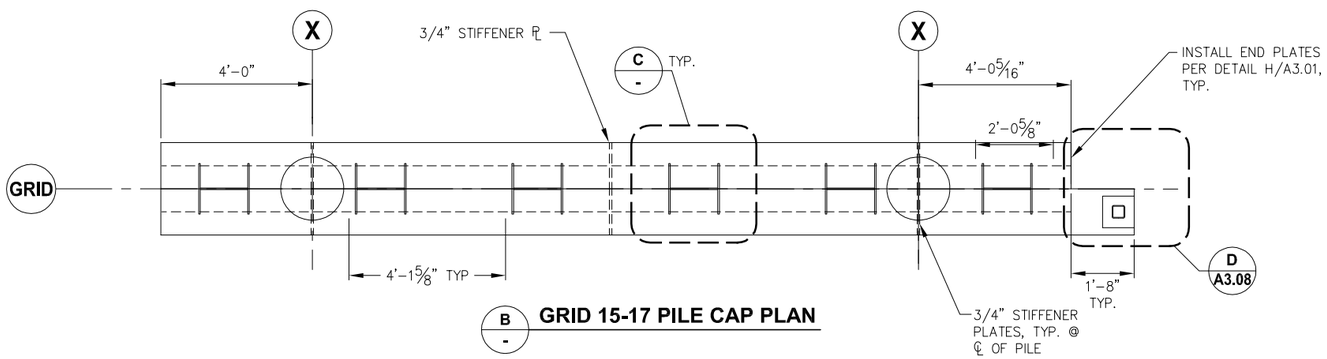

B / - GRID 15-17 PILE CAP PLAN

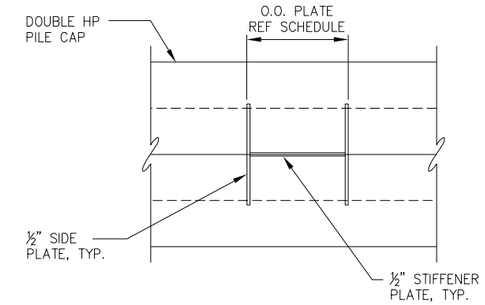

C / - STRINGER CONNECTION PLAN
NTS

STRINGER CONNECTION O.O. PLATE SCHEDULE	
TYPE	DIMENSION
A	1'-4 1/16"
B	1'-3 7/8"
C	1'-6 3/8"
D	1'-6 1/2"

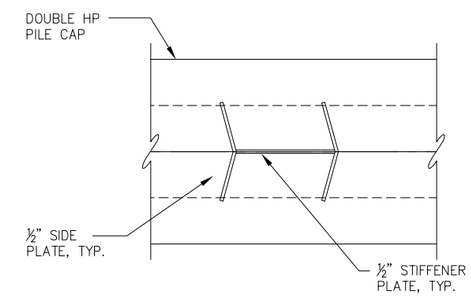

D / - STRINGER CONNECTION PLAN
NTS

65% DESIGN REVIEW SUBMITTAL

REVISIONS

REV.	DATE	DESCRIPTION	DWN.	CKD.	APP.

PND ENGINEERS, INC.
9360 Glacier Highway Ste 100
Juneau, Alaska 99801
Phone: 907-586-2093
Fax: 907-586-2099
www.pndengineers.com

DESIGN: SRY CHECKED: CRS
DRAWN: SRY APPROVED: CRS
SCALE: NTS
DATE: 12/7/12

HAINES BOROUGH
PORT CHILKOOT DOCK
IMPROVEMENTS - PHASE 2

SHEET TITLE: PILE CAP DETAILS

PND PROJECT NO.: 112048.04 DWG. FILE: 3.04.DWG

A3.05
SHEET 27 OF 48

N:\11XXX\112048 Port Chilkoot Dock Trestle Replacement\Drawings\PND\3.04 - 3.05 Pile Cap Details.dwg, 12/7/2012 11:58:04 AM, 1:2

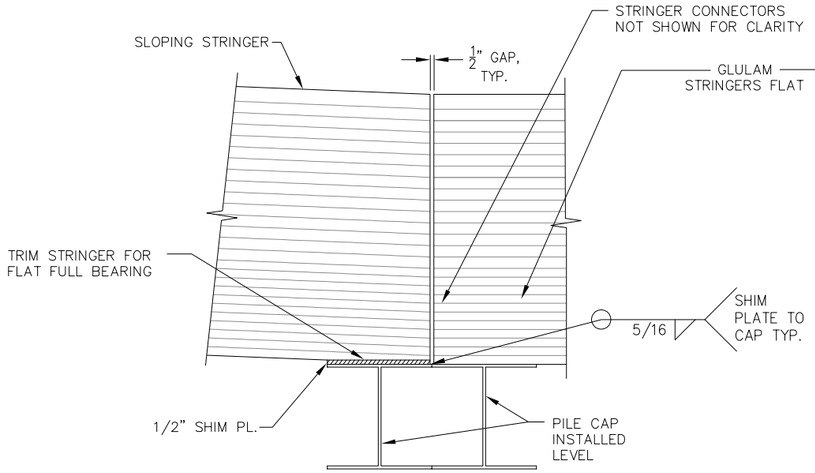

A - SLOPED STRINGER TRANSITION DETAIL

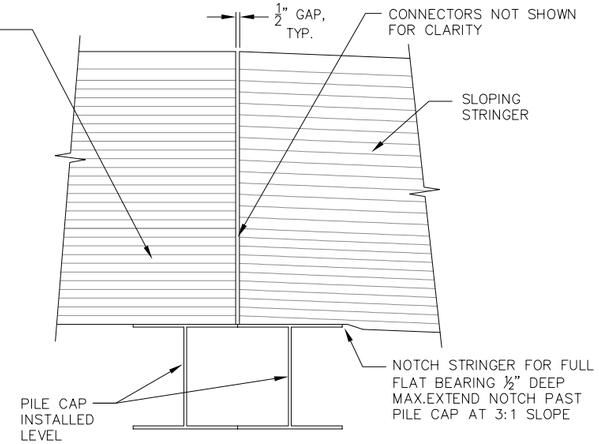

B - SLOPED STRINGER TRANSITION DETAIL

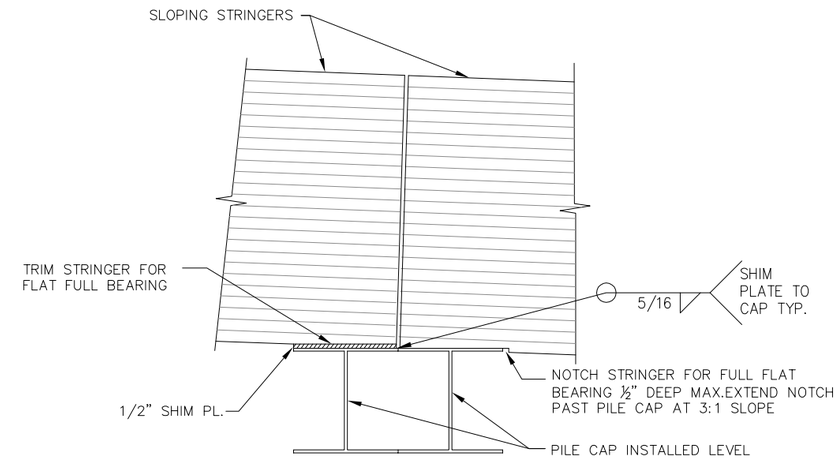

C - SLOPED STRINGER TRANSITION DETAIL

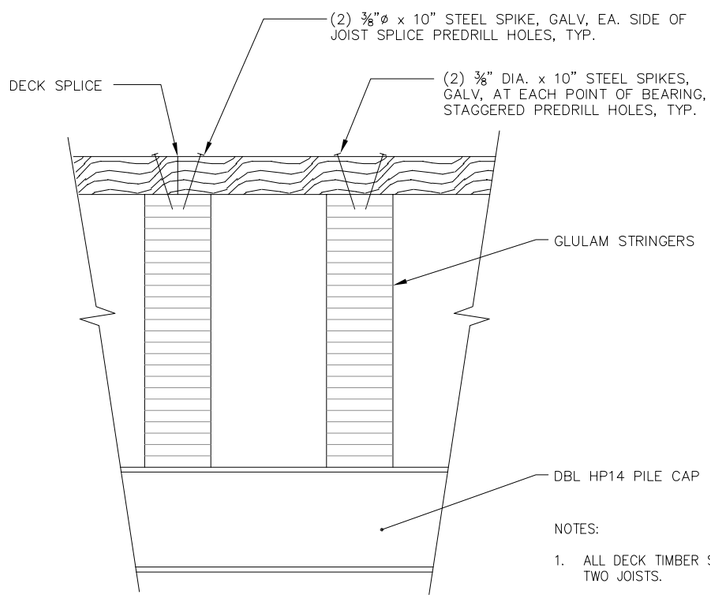

D - TYPICAL DECK TO JOIST CONNECTION

NOTES:

1. ALL DECK TIMBER SHALL BE SUPPORTED BY A MINIMUM OF TWO JOISTS.
2. DECK BOARDS SHALL BE SPLICED WITH A RANDOM LAYOUT WITH NO TWO ADJACENT BOARDS SPLICED AT SAME JOIST.
3. DECK TIMBER BOARDS SHALL HAVE A MINMUM LENGTH OF 12'-0", AT BULLRAIL POST LOCATIONS.

65% DESIGN REVIEW SUBMITTAL

REVISIONS

REV.	DATE	DESCRIPTION	DWN.	CKD.	APP.

PND ENGINEERS, INC.
9360 Glacier Highway Ste 100
Juneau, Alaska 99801
Phone: 907-586-2093
Fax: 907-586-2099
www.pndengineers.com

DESIGN: MDS CHECKED: CMG
DRAWN: MDS APPROVED: CRS
SCALE: NTS
DATE: 12/7/12

HAINES BOROUGH
PORT CHILKOOT DOCK
IMPROVEMENTS - PHASE 2

SHEET TITLE: FRAMING DETAILS

PND PROJECT NO.: 112048.04 DWG. FILE: 3.06.DWG

A3.06
SHEET 28 OF 48

N:\11XXX\112048 Port Chilkoot Dock Trestle Replacement\Drawings\PHD\3.06 - Framing Details.dwg, 12/7/2012 11:58:10 AM, 1:2

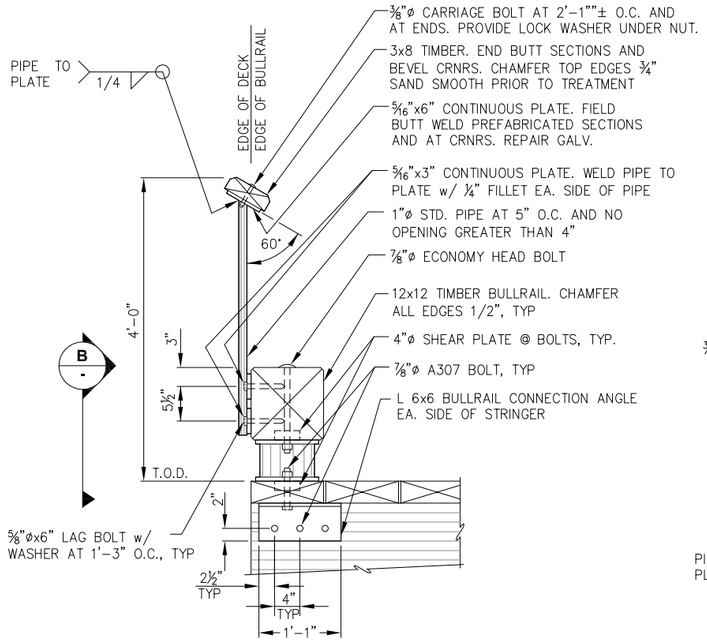

A - BULLRAIL/GUARDRAIL SECTION

NOTE: ALL BULLRAIL CONNECTION BOLTS SHALL BE 7/8"ø UNLESS OTHERWISE NOTED.

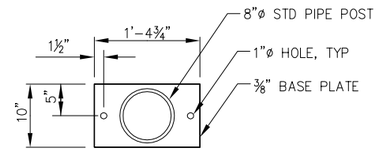

1 - POST BASE PLATE - PLAN

NOTE: PROVIDE AT 6-FT O.C. MAX AND 2-FT MAX FROM BULLRAIL ENDS. MIN. 2 POST BASE PER 12x12 PIECE.

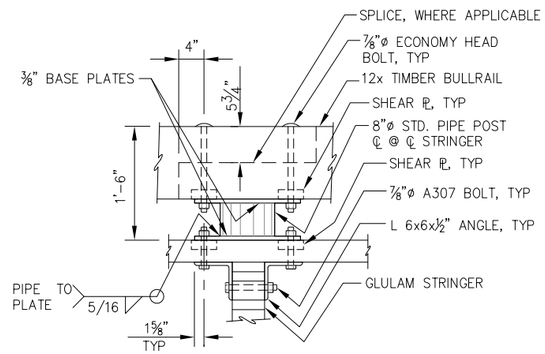

B - BULLRAIL ELEVATION

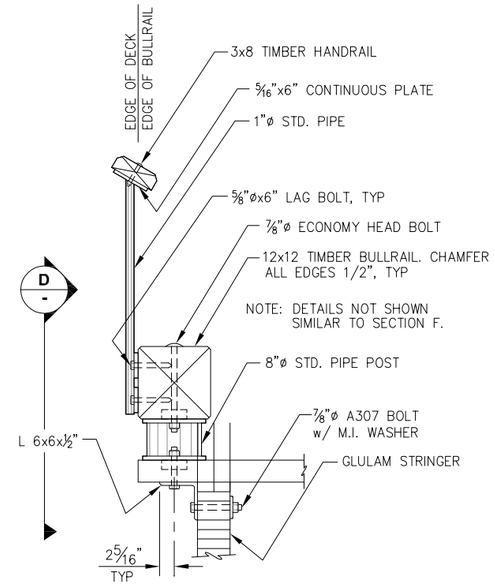

C - BULLRAIL/GUARDRAIL SECTION

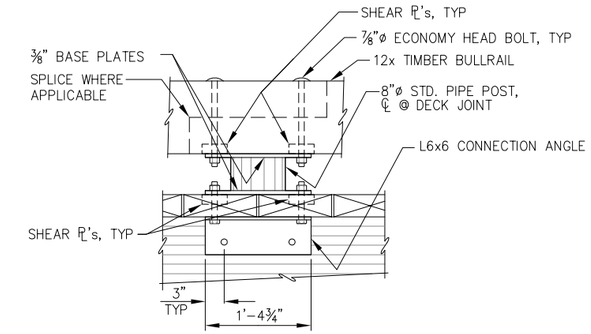

D - BULLRAIL ELEVATION

NOTE: DETAILS NOT SHOWN SIMILAR TO ELEVATION B.

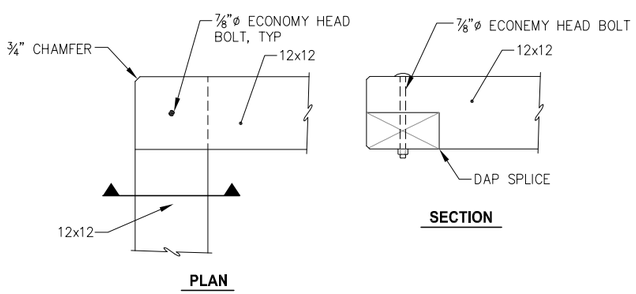

E - TYPICAL BULLRAIL CORNER DETAIL

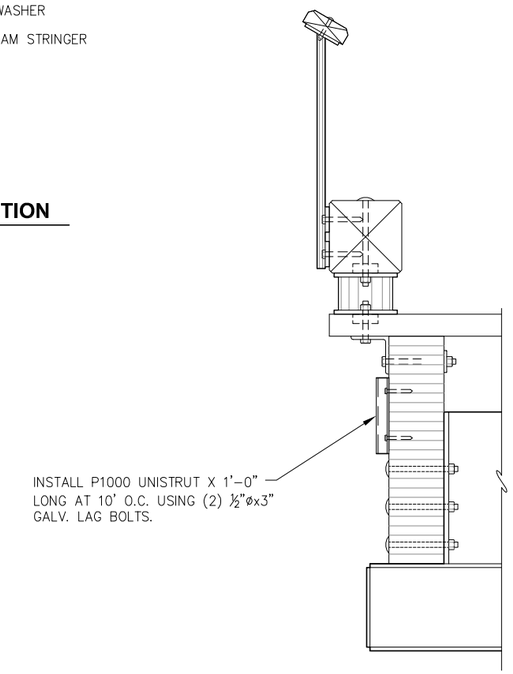

F - UNISTRUT CONDUIT BRACKET DETAIL

65% DESIGN REVIEW SUBMITTAL

REVISIONS

REV.	DATE	DESCRIPTION	DWN.	CKD.	APP.

PND ENGINEERS, INC.
9360 Glacier Highway Ste 100
Juneau, Alaska 99801
Phone: 907-586-2093
Fax: 907-586-2099
www.pndengineers.com

DESIGN: SRY CHECKED: CRS
DRAWN: SRY APPROVED: CRS
SCALE:
DATE: 12/7/12

HAINES BOROUGH
PORT CHILKOOT DOCK IMPROVEMENTS - PHASE 2

SHEET TITLE: GUARDRAIL AND BULLRAIL DETAILS

PND PROJECT NO.: 112048.04 DWG. FILE: 3.07.DWG

A3.07

N:\11XXX\112048 Port Chilkoot Dock Trestle Replacement\Drawings\PHD\3.07 - Guardrail and Bullrail Details.dwg, 12/7/2012 11:58:15 AM, 1:2

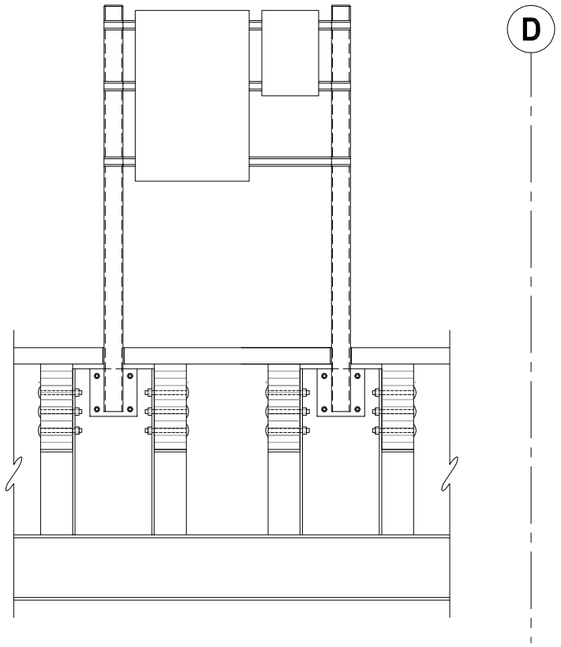

A - **ELECTRICAL PANEL MOUNTING DETAIL**
NTS

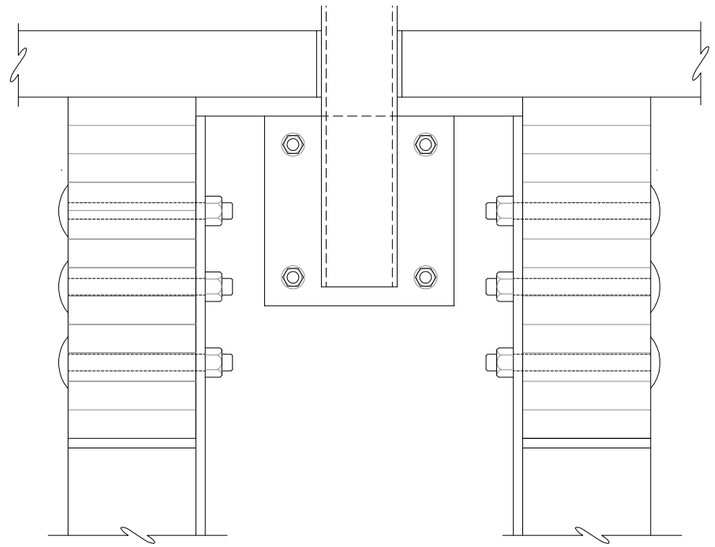

B - **ELECTRICAL PANEL POST BRACKET**
NTS

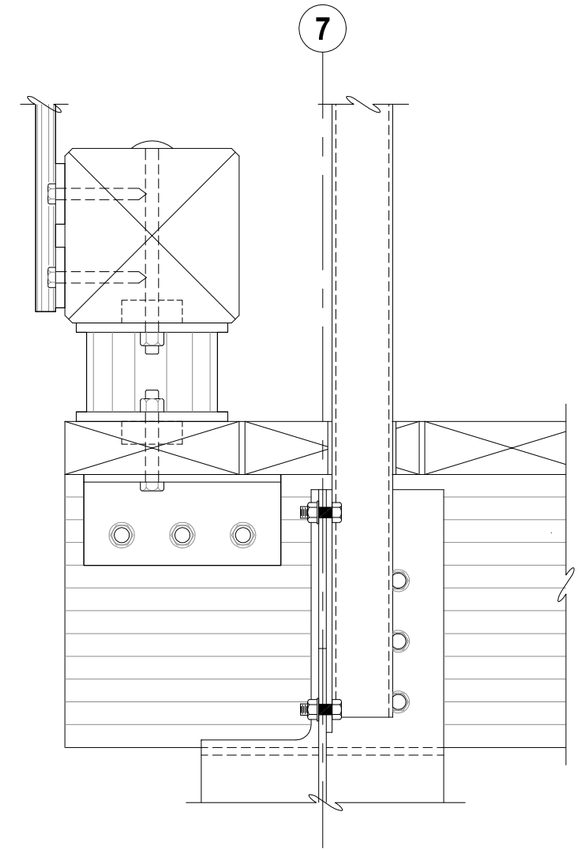

C - **ELECTRICAL PANEL POST BRACKET**
NTS

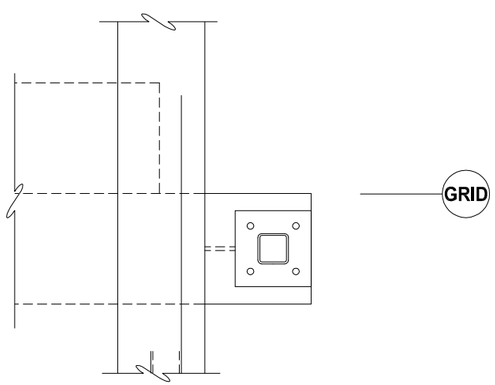

D - **LIGHT POLE MOUNTING PLAN**
NTS

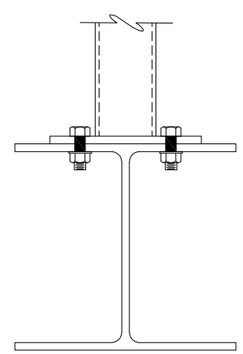

E - **LIGHT POLE MOUNTING SECTION**
NTS

65% DESIGN REVIEW SUBMITTAL

REVISIONS

REV.	DATE	DESCRIPTION	DWN.	CKD.	APP.

P N D ENGINEERS, INC.
9360 Glacier Highway Ste 100
Juneau, Alaska 99801
Phone: 907-586-2093
Fax: 907-586-2099
www.pndengineers.com

DESIGN: SRY CHECKED: CRS
DRAWN: SRY APPROVED: CRS
SCALE:
DATE: 12/7/12

HAINES BOROUGH
PORT CHILKOOT DOCK
IMPROVEMENTS - PHASE 2

SHEET TITLE:
ELECTRICAL PANEL AND LIGHT POLE MOUNTING DETAILS

PND PROJECT NO.: 112048.04 DWG. FILE: 3.08.DWG

A3.08
SHEET 30 OF 48

N:\11XXX\112048 Port Chilkoot Dock Trestle Replacement\Drawings\PND\3.08 - Electrical Panel and Light Pole Mounting Details.dwg, 12/7/2012 11:58:21 AM, 1:2

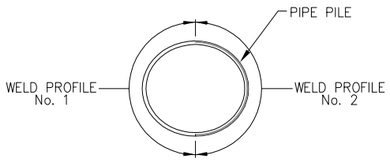

PLAN

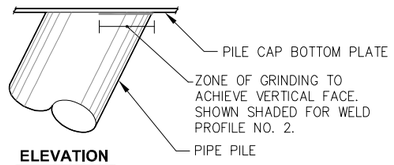

ELEVATION

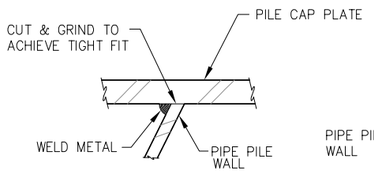

WELD PROFILE No. 1

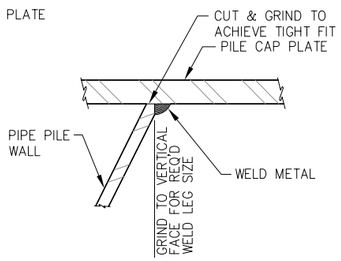

WELD PROFILE No. 2

A - BATTER PILE WELD DETAILS

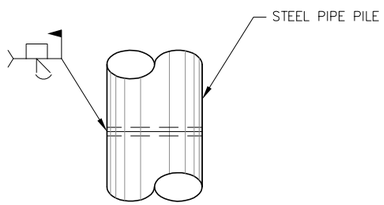

ELEVATION

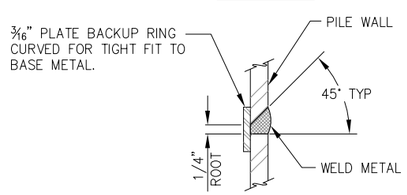

TYPICAL SECTION

C - TYPICAL PILE SPLICE WELD

TYPICAL FOR ALL FIELD PIPE PILE SPLICES

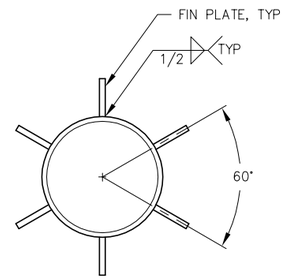

B - SECTION

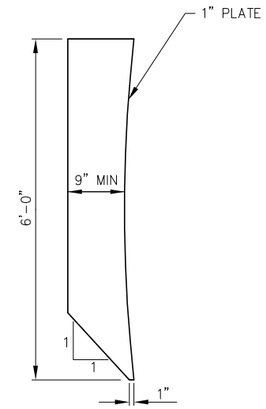

FIN PLATE

NOTE: MINIMUM WIDTH OF FIN PLATE SHALL INCREASE ONE INCH IF OUTSIDE EDGE OF FINS ARE CURVED TO MATCH INSIDE EDGE.

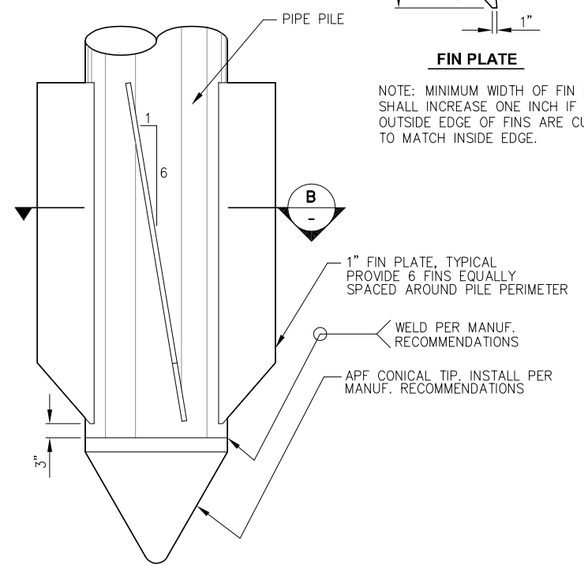

SPIN FIN PILE TIP

PILE SCHEDULE

	GRID	DESIGNATION	ULTIMATE LOADS (KIPS) VERTICAL COMPRESSION LOAD = D+L+DW	TENSION LOAD = .6D−.7E+.6DW	PILE DIAMETER (IN)	PILE WALL THICKNESS (IN)	REQUIRED FURNISHED LENGTH (FT)	PILE TIP
*	2−F	VERTICAL	225	245	20	0.500	100	CONICAL TIP
		BATTER	345		20	0.500	100	CONICAL TIP W/ SPIN FIN
*	2−G	VERTICAL	225	245	20	0.500	100	CONICAL TIP
		BATTER	345		20	0.500	100	CONICAL TIP W/ SPIN FIN
		BATTER	80	80	20	0.500	100	CONICAL TIP
	3−F	VERTICAL	225		20	0.500	100	CONICAL TIP
	3−G	VERTICAL	225	25	20	0.500	100	CONICAL TIP
		BATTER	85	85	20	0.500	120	CONICAL TIP
	4−F	VERTICAL	230		20	0.500	120	CONICAL TIP
	4−G	VERTICAL	230	25	20	0.500	120	CONICAL TIP
		BATTER	85	85	20	0.500	100	CONICAL TIP
	5−F	VERTICAL	230		20	0.500	100	CONICAL TIP
	5−G	VERTICAL	230	25	20	0.500	100	CONICAL TIP
		BATTER	85	85	20	0.500	120	CONICAL TIP
	6−F	VERTICAL	230		20	0.500	120	CONICAL TIP
	6−G	VERTICAL	230	25	20	0.500	120	CONICAL TIP
		BATTER	85	85	20	0.500	100	CONICAL TIP
	7−C	VERTICAL	75	55	20	0.500	100	CONICAL TIP
		BATTER	75	75	20	0.500	100	CONICAL TIP
*	7−F	VERTICAL	200	245	20	0.500	120	CONICAL TIP
		BATTER	345		20	0.500	120	CONICAL TIP W/ SPIN FIN
*	7−G	VERTICAL	185	245	20	0.500	120	CONICAL TIP
		BATTER	345		20	0.500	120	CONICAL TIP W/ SPIN FIN
	8−C	VERTICAL	115		20	0.500	100	CONICAL TIP
	8−E	VERTICAL	130	30	20	0.500	100	CONICAL TIP
		BATTER	70	70	20	0.500	120	CONICAL TIP
	9−D	VERTICAL	80		20	0.500	100	CONICAL TIP
	9−F	VERTICAL	80		20	0.500	100	CONICAL TIP
		BATTER	75		20	0.500	100	CONICAL TIP
	10−D	VERTICAL	110	35	20	0.500	100	CONICAL TIP
		BATTER	45	45	20	0.500	120	CONICAL TIP
	10−E	VERTICAL	75		20	0.500	100	CONICAL TIP
	12−C.9	VERTICAL	65	45	16	0.500	130	CONICAL TIP
	12−E.1	VERTICAL	65	45	16	0.500	130	CONICAL TIP
	13−E.1	VERTICAL	65	25	16	0.500	130	CONICAL TIP
	14−G	VERTICAL			20	0.500	100	CONICAL TIP
	15−H	VERTICAL			20	0.500	130	CONICAL TIP
		BATTER			20	0.500	140	CONICAL TIP
	15−J	VERITICAL			20	0.5000	130	CONICAL TIP
	16−H	VERITICAL			20	0.5000	130	CONICAL TIP
		BATTER			20	0.5000	140	CONICAL TIP
	16−J	VERTICAL			20	0.5000	130	CONICAL TIP
	17−H	VERTICAL			20	0.5000	130	CONICAL TIP
		BATTER			20	0.5000	140	CONICAL TIP
	17−J	VERTICAL			20	0.5000	130	CONICAL TIP

* INDICATES OWNER SUPPLIED PILE

65% DESIGN REVIEW SUBMITTAL

REVISIONS

REV.	DATE	DESCRIPTION	DWN.	CKD.	APP.

PND ENGINEERS, INC.
9360 Glacier Highway Ste 100
Juneau, Alaska 99801
Phone: 907-586-2093
Fax: 907-586-2099
www.pndengineers.com

DESIGN: MDS CHECKED: CRS
DRAWN: MDS APPROVED: CRS
SCALE:
DATE: 12/7/12

HAINES BOROUGH
PORT CHILKOOT DOCK IMPROVEMENTS - PHASE 2

SHEET TITLE: PILE SCHEDULE AND DETAILS

PND PROJECT NO.: 112048.04 DWG. FILE: 3.09.DWG

A3.09

H:\11XXX\112048 Port Chilkoot Dock Trestle Replacement\Drawings\PND\3.09 - Pile Schedule and Details.dwg, 12/7/2012 11:58:26 AM, 1:2

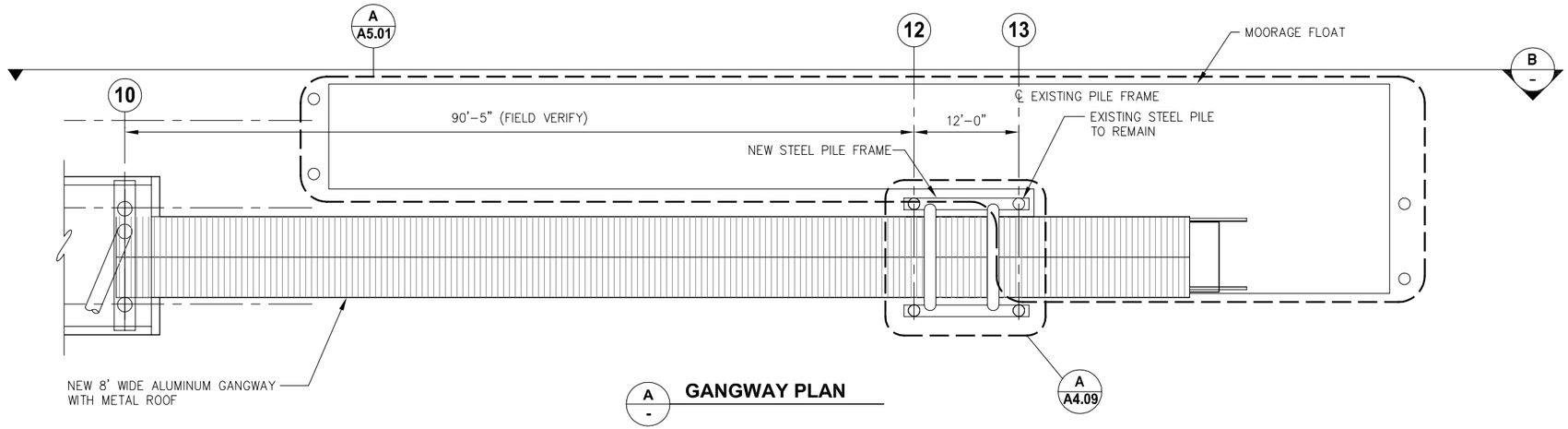

A - **GANGWAY PLAN**

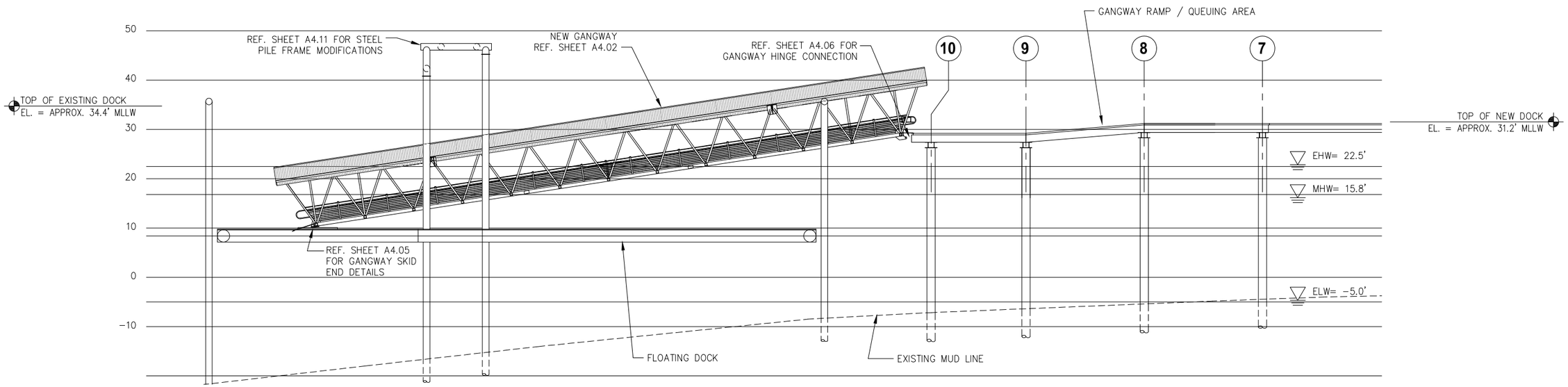

B - **GANGWAY ELEVATION**

65% DESIGN REVIEW SUBMITTAL

REVISIONS

REV.	DATE	DESCRIPTION	DWN.	CKD.	APP.

PND ENGINEERS, INC.
9360 Glacier Highway Ste 100
Juneau, Alaska 99801
Phone: 907-586-2093
Fax: 907-586-2099
www.pndengineers.com

DESIGN: SRY CHECKED: CRS
DRAWN: SRY APPROVED: CRS
SCALE: SCALE (FEET) 0 40 80
DATE: 12/7/12

HAINES BOROUGH
PORT CHILKOOT DOCK IMPROVEMENTS - PHASE 2

SHEET TITLE:
GANGWAY GENERAL PLAN AND ELEVATION

PND PROJECT NO.: 112048.04 DWG. FILE: 4.01.DWG

A4.01

SHEET 32 OF 48

H:\11XXX\112048 Port Chilkoot Dock Trestle Replacement\Drawings\PND\4.01 - Gangway General Plan and Elevation.dwg, 12/7/2012 11:58:34 AM, 1:2

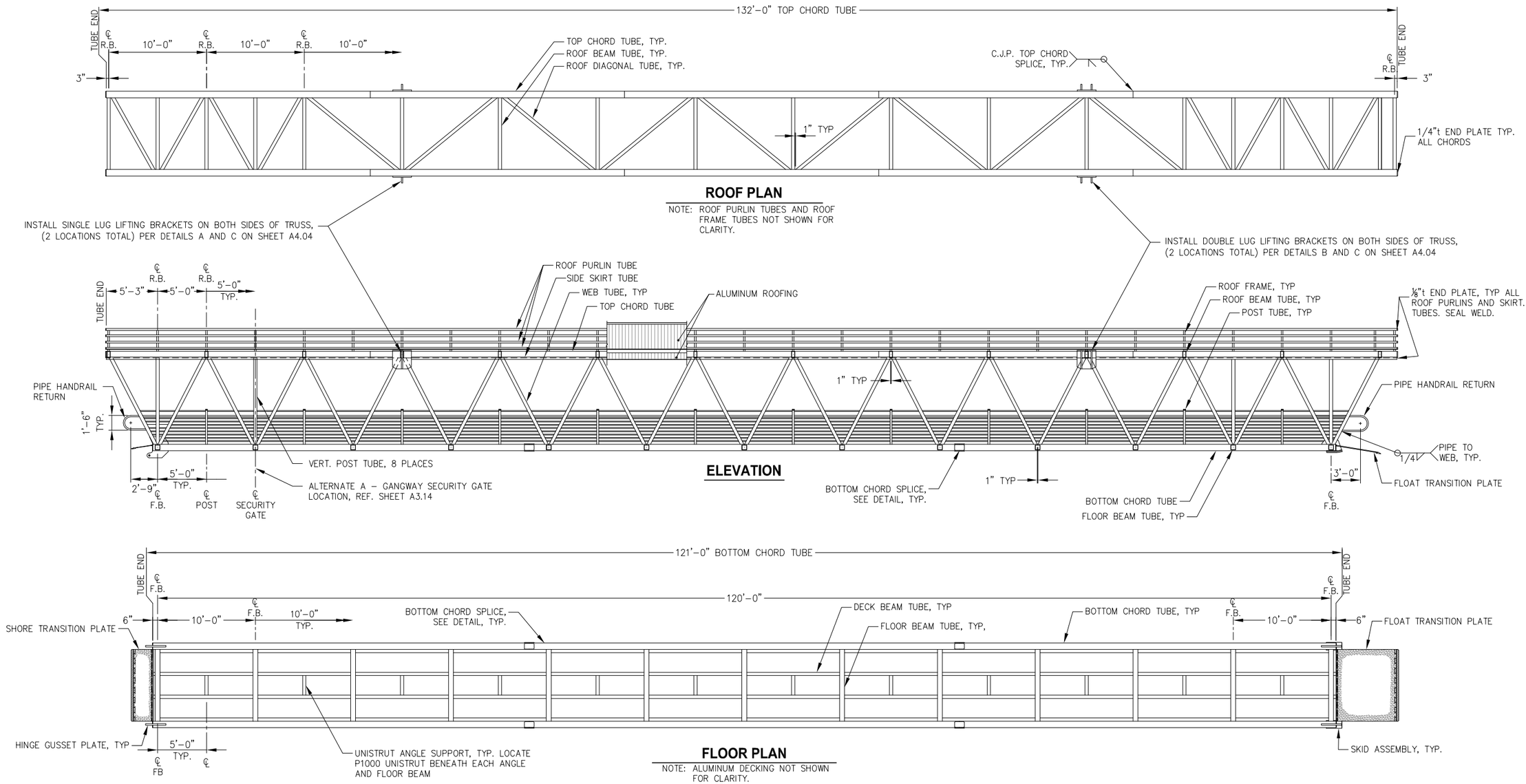

FLOOR PLAN

NOTE: ALUMINUM DECKING NOT SHOWN FOR CLARITY.

GENERAL NOTES

1. NO BOTTOM CHORD SPLICES IN MIDDLE THIRD OF GANGWAY.
2. CHORD SPLICE LOCATIONS SHOWN FOR ILLUSTRATION ONLY. ACTUAL LOCATIONS SHALL BE SUBMITTED BY FABRICATOR FOR ENGINEER APPROVAL.
3. TOP AND BOTTOM CHORD SPLICES SHALL BE STAGGERED 5-FT MIN.
4. PROVIDE CAMBER OF 4" MIN. AT MID-SPAN.
5. ALL MATERIALS SHALL BE ALUMINUM TYPE 6061-T6 UNLESS OTHERWISE NOTED.
6. PROVIDE WEEP HOLES AT DOWNHILL END OF ALL CHORD TUBES, DECK BEAM TUBES, ROOF BRACES, AND SKIRT TUBES. FABRICATOR SHALL SUBMIT HOLE LOCATIONS TO ENGINEER FOR APPROVAL.
7. TOP SIDE SKIRT TUBE NOT SHOWN IN ELEVATION FOR CLARITY.
8. FOR BOTTOM CHORD, PROVIDE 1/4"t END PLATE WITH 1/4" ALL AROUND FILLET WELD. FOR ALL OTHER OPEN ENDED MEMBERS PROVIDE END PLATE OF EQUAL WALL THICKNESS AND SEAL WELD
9. CONTRACTOR MAY SUBMIT FOR ENGINEER'S APPROVAL VARIATIONS IN PRESENTED MEMBER SIZES AND CONFIGURATION. OVERALL DIMENSIONS SHALL REMAIN AS DEPICTED IN THESE DRAWINGS. CONTRACTOR SHALL SUBMIT A SIGNED AND STAMPED SET OF DRAWINGS AND CALCULATIONS BY A LICENCED P.E. IN THE STATE OF ALASKA FOR APPROVAL.

WELDING NOTE:
WELD ALL JOINTS WITH ¼" FILLET MIN., U.N.O., WELD ALL AROUND OR EQUIVALENT.

65% DESIGN REVIEW SUBMITTAL

REVISIONS

REV.	DATE	DESCRIPTION	DWN.	CKD.	APP.

PND ENGINEERS, INC.
9360 Glacier Highway Ste 100
Juneau, Alaska 99801
Phone: 907-586-2093
Fax: 907-586-2099
www.pndengineers.com

DESIGN: SRY CHECKED: CRS
DRAWN: SRY APPROVED: CRS
SCALE: AS SHOWN
DATE: 12/7/12

HAINES BOROUGH
PORT CHILKOOT DOCK IMPROVEMENTS - PHASE 2

SHEET TITLE: GANGWAY FRAMING PLAN AND ELEVATION

PND PROJECT NO.: 112048.04 DWG. FILE: 4.02.DWG

A4.02

N:\11XXX\112048 Port Chilkoot Dock Trestle Replacement\Drawings\PND\4.02 - Gangway Framing Plan and Elevation.dwg, 12/7/2012 11:58:41 AM 1:2

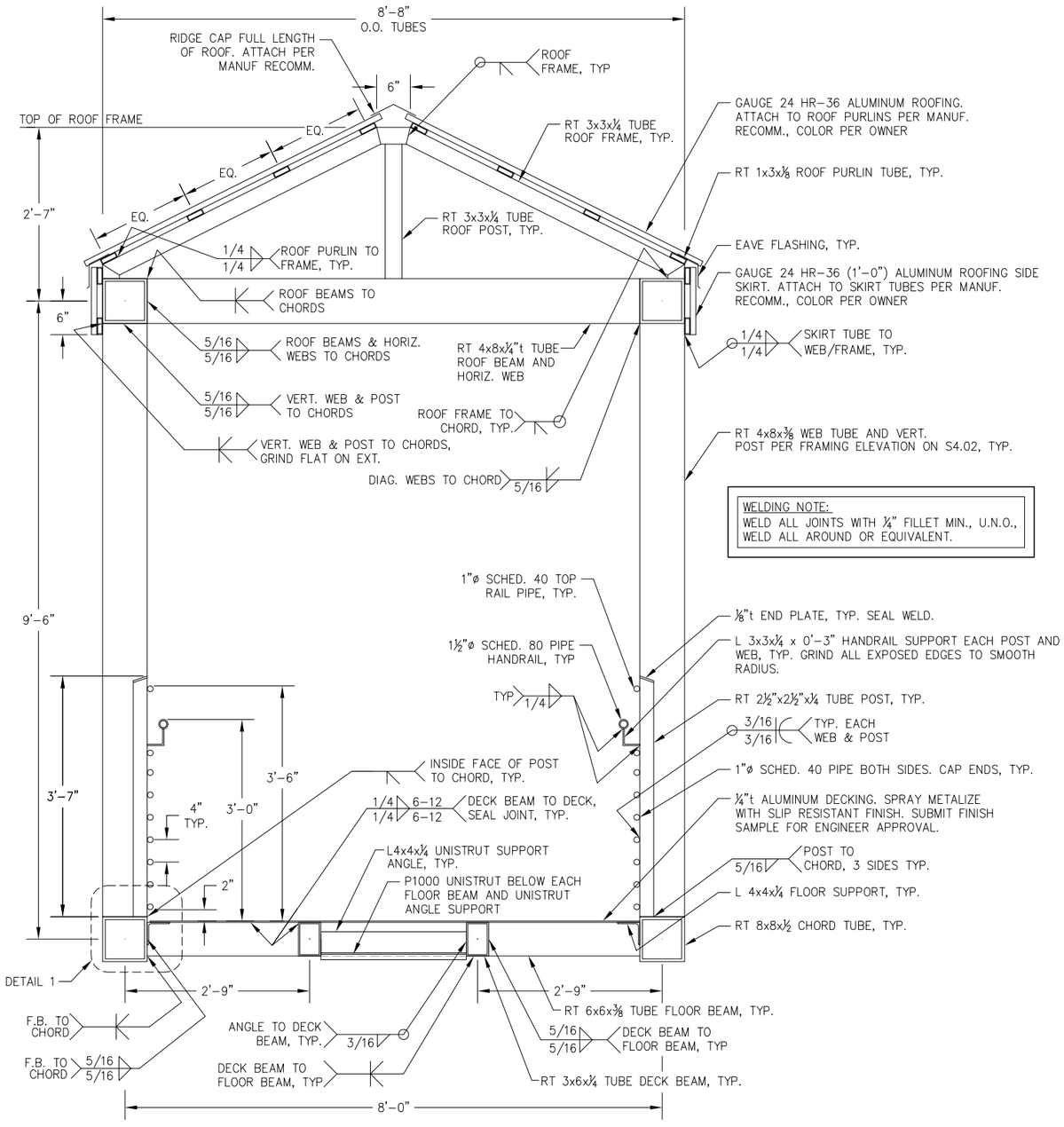

TYPICAL SECTION

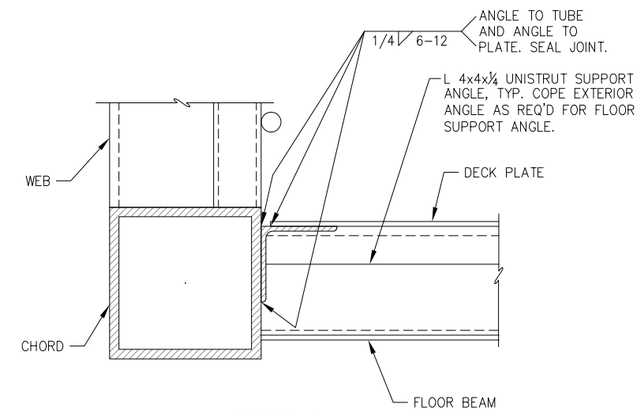

DETAIL 1

WELDING NOTE:
WELD ALL JOINTS WITH ¼" FILLET MIN., U.N.O., WELD ALL AROUND OR EQUIVALENT.

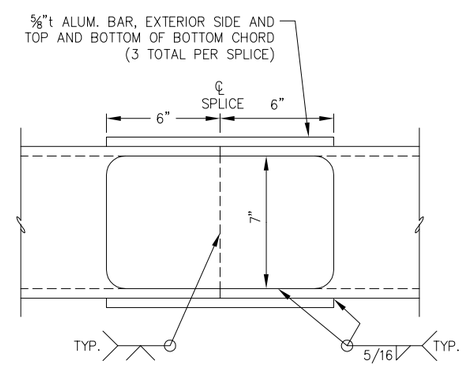

BOTTOM CHORD SPLICE

65% DESIGN REVIEW SUBMITTAL

REVISIONS

REV.	DATE	DESCRIPTION	DWN.	CKD.	APP.

PND ENGINEERS, INC.
9360 Glacier Highway Ste 100
Juneau, Alaska 99801
Phone: 907-586-2093
Fax: 907-586-2099
www.pndengineers.com

DESIGN: SRY CHECKED: CRS
DRAWN: SRY APPROVED: CRS
SCALE: AS SHOWN
DATE: 12/7/12

HAINES BOROUGH
PORT CHILKOOT DOCK IMPROVEMENTS - PHASE 2

SHEET TITLE: GANGWAY TYPICAL SECTION AND DETAILS

PND PROJECT NO.: 112048.04 DWG. FILE: 4.03.DWG

A4.03

SHEET 34 OF 48

N:\11XXX\112048 Port Chilkoot Dock Trestle Replacement\Drawings\PND\4.03 - Gangway Typical Section and Details.dwg, 12/7/2012 11:58:45 AM, 1:2

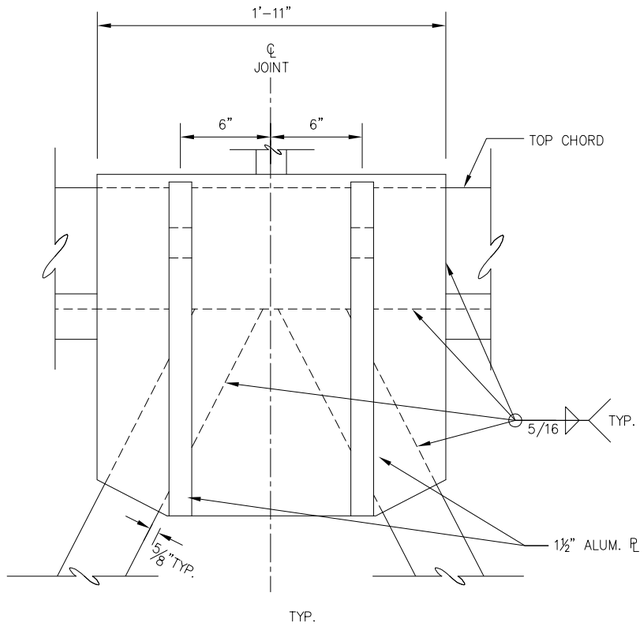

A GANGWAY LIFTING BRACKET

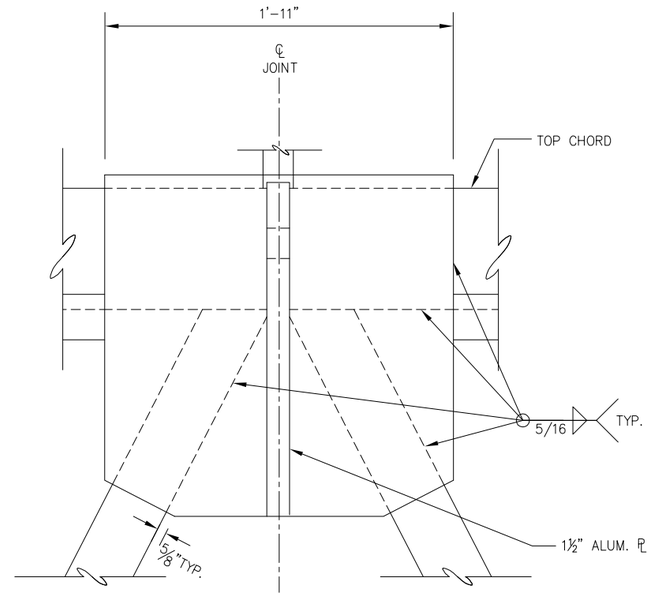

B GANGWAY LIFTING BRACKET

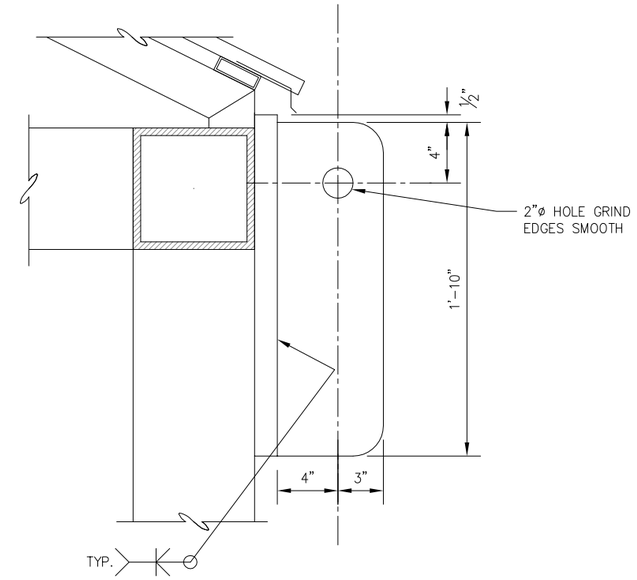

C GANGWAY LIFT BRACKET DETAIL

65% DESIGN REVIEW SUBMITTAL

REVISIONS

REV.	DATE	DESCRIPTION	DWN.	CKD.	APP.

PND ENGINEERS, INC.
9360 Glacier Highway Ste 100
Juneau, Alaska 99801
Phone: 907-586-2093
Fax: 907-586-2099
www.pndengineers.com

DESIGN: SRY CHECKED: CRS
DRAWN: SRY APPROVED: CRS
SCALE: AS SHOWN
DATE: 12/7/12

HAINES BOROUGH
PORT CHILKOOT DOCK
IMPROVEMENTS - PHASE 2

SHEET TITLE:
GANGWAY LIFTING BRACKET DETAILS

PND PROJECT NO.: 112048.04 DWG. FILE: 4.04.DWG

A4.04

N:\11XXX\112048 Port Chilkoot Dock Trestle Replacement\Drawings\PND\4.04 - Gangway Lifting Bracket Details.dwg, 12/7/2012 11:58:50 AM, 1:2

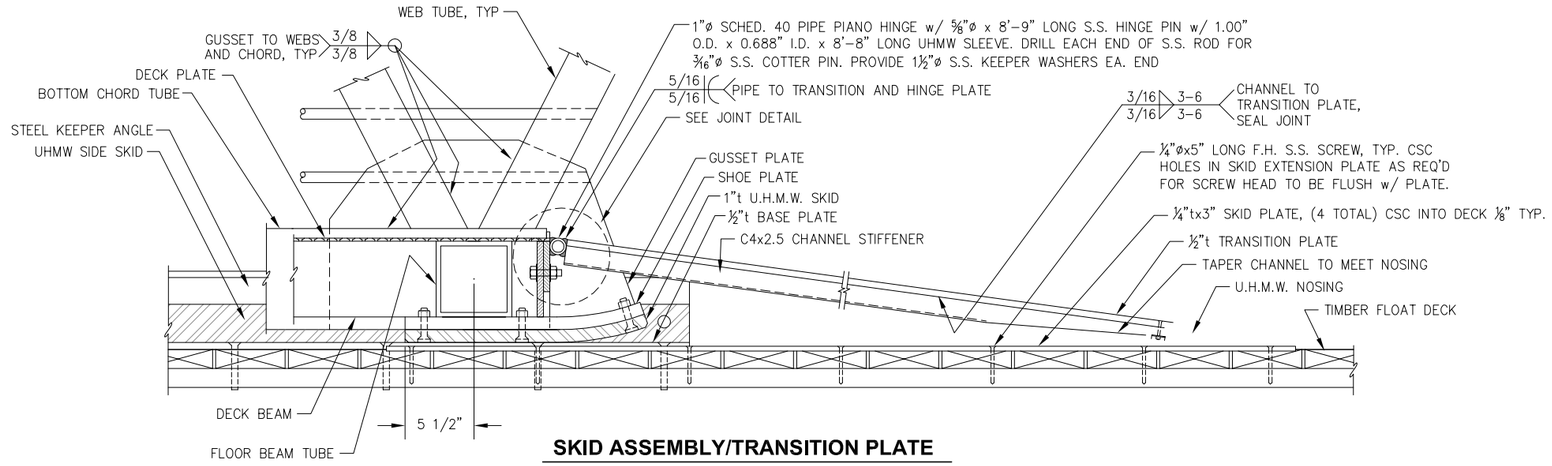

SKID ASSEMBLY/TRANSITION PLATE

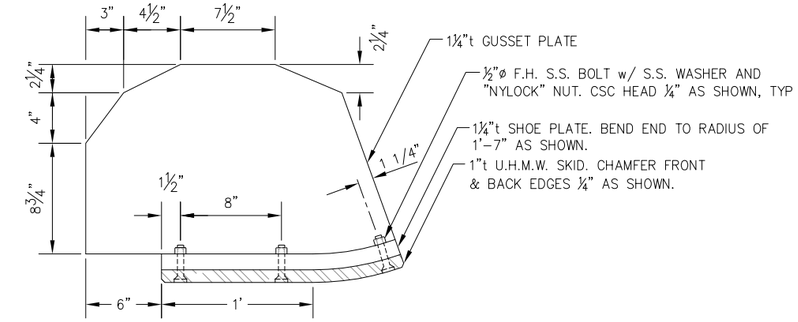

GUSSET/SKID PLATE - (2 TOTAL)

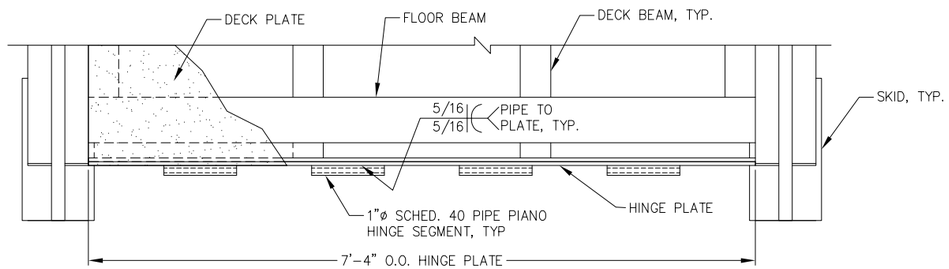

WELDING NOTE:
WELD ALL JOINTS WITH 1/4" FILLET U.N.O.
WELD ALL AROUND OR EQUIVALENT.

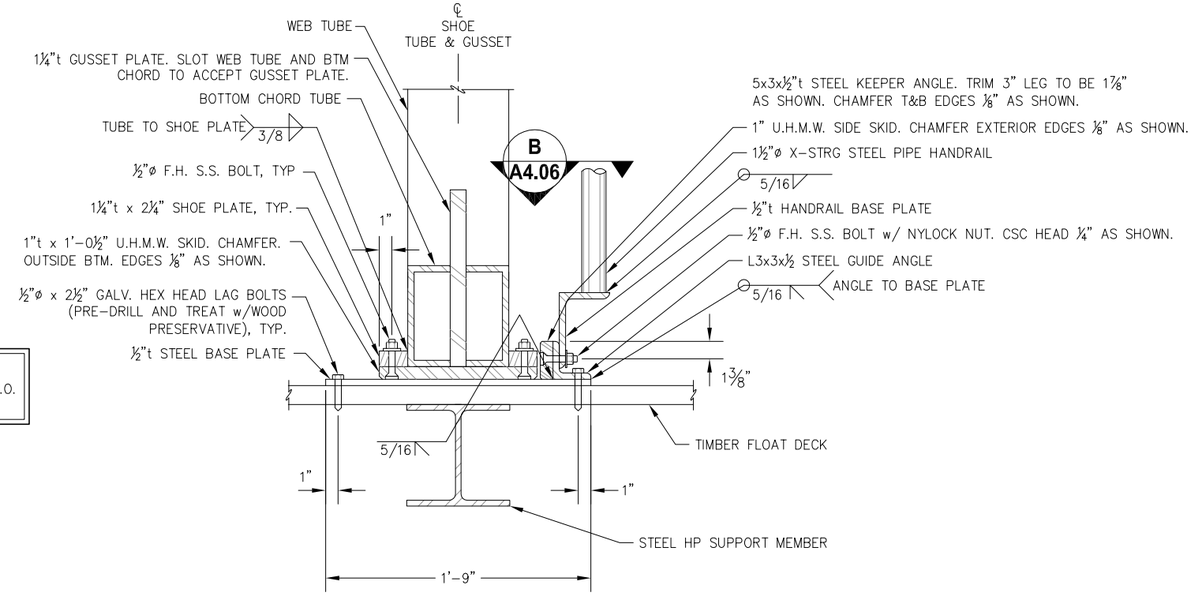

SKID ASSEMBLY SECTION

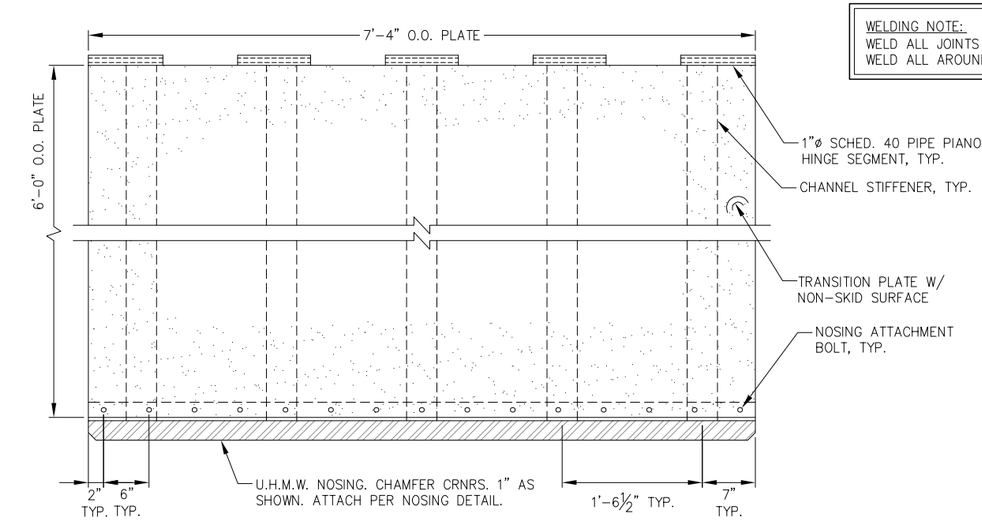

FLOAT TRANSITION PLATE

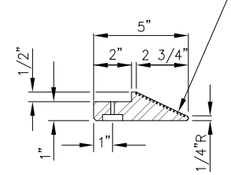

SOLID U.H.M.W. POLYETHYLENE PER SPECIFICATIONS. PROVIDE 3/16"ø HOLE w/ 1 1/16"ø x 5/16" DEEP CSC AS SHOWN. ATTACH NOSING w/ #10 S.S. FLATHEAD PHILLIPS BOLT w/ "NYLOCK" NUT AND 1"ø S.S. FENDER WASHER. TRIM BOLT AS REQ'D TO BE FLUSH w/ NUT. LOCATE BOLTS PER TRANSITON PLATE PLAN. CHAMFER BACK EDGE 1/8" AS SHOWN. FABRICATOR TO PROVIDE NON-SKID SURFACE ON TOP OF NOSING. SUBMIT FOR APPROVAL.

UHMW NOSING

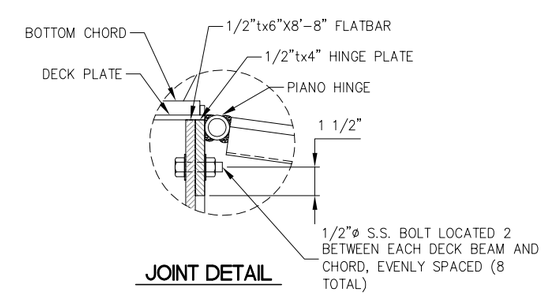

JOINT DETAIL

65% DESIGN REVIEW SUBMITTAL

REVISIONS

REV.	DATE	DESCRIPTION	DWN.	CKD.	APP.

PND ENGINEERS, INC.
9360 Glacier Highway Ste 100
Juneau, Alaska 99801
Phone: 907-586-2093
Fax: 907-586-2099
www.pndengineers.com

DESIGN: SRY CHECKED: CRS
DRAWN: SRY APPROVED: CRS
SCALE: AS SHOWN
DATE: 12/7/12

HAINES BOROUGH
PORT CHILKOOT DOCK IMPROVEMENTS - PHASE 2

SHEET TITLE: GANGWAY SKID END DETAILS

PND PROJECT NO.: 112048.04 DWG. FILE: 4.05.DWG

A4.05
SHEET 36 OF 48

N:\11XXX\112048 Port Chilkoot Dock Trestle Replacement\Drawings\FHD 4.05 - Gangway Skid End Details.dwg, 12/7/2012 11:58:56 AM, 1:2

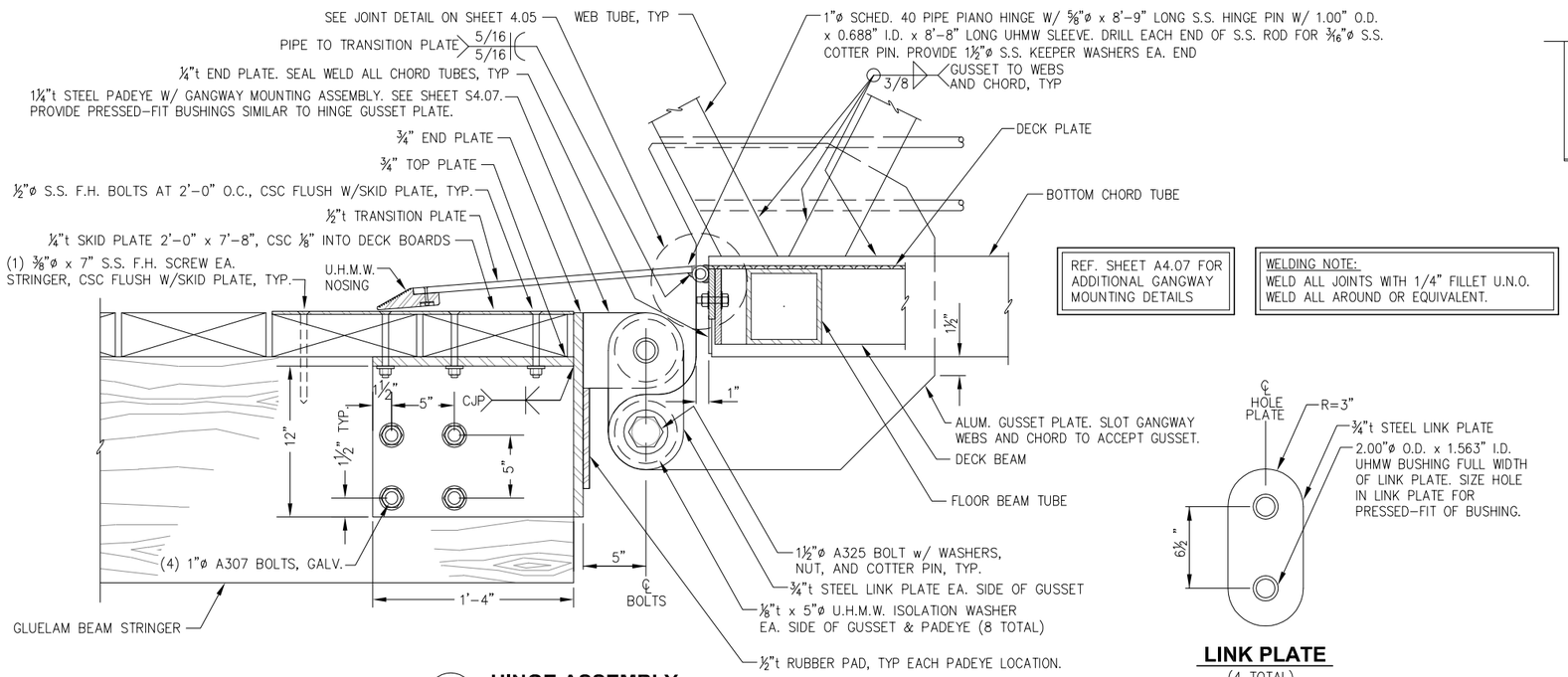

REF. SHEET A4.07 FOR ADDITIONAL GANGWAY MOUNTING DETAILS

WELDING NOTE:
WELD ALL JOINTS WITH 1/4" FILLET U.N.O.
WELD ALL AROUND OR EQUIVALENT.

A HINGE ASSEMBLY

LINK PLATE

(4 TOTAL)

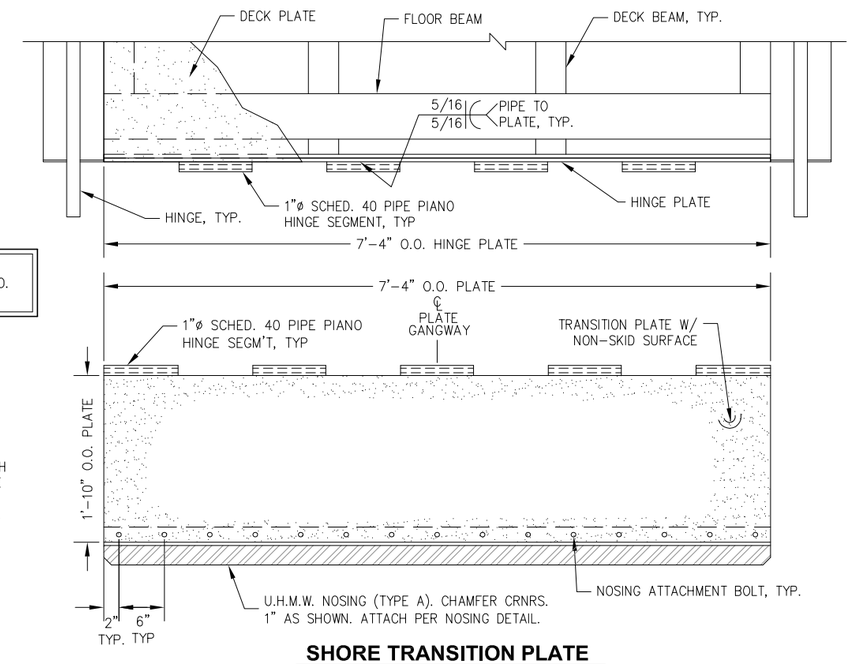

SHORE TRANSITION PLATE

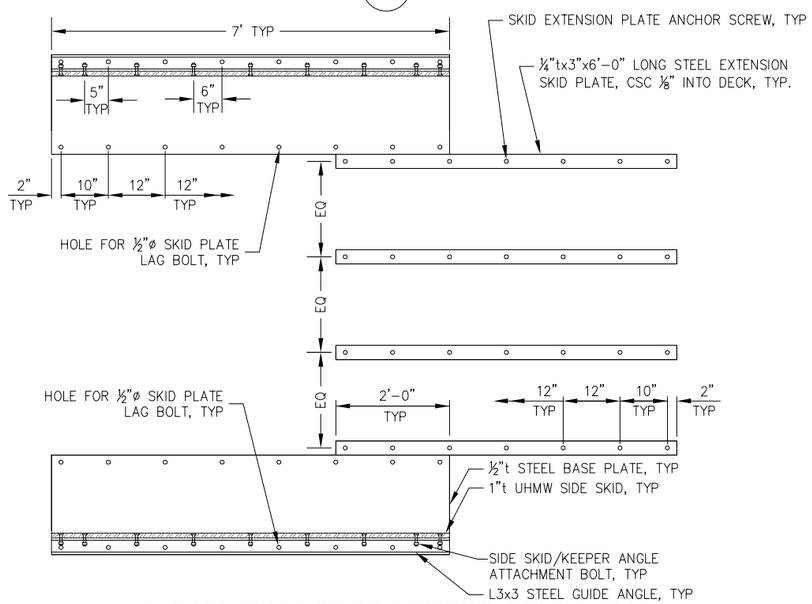

SKID BASE PLATE/GUIDE ANGLE ASSEMBLY - PLAN

NOTE: STEEL KEEPER ANGLES NOT SHOWN FOR CLARITY. PERMANENTLY ATTACH SKID BASE PLATE TO FLOAT AT ENGINEER DIRECTED LOCATION ONLY AFTER SEVERAL TIDE CYCLES TO ASSURE PROPER POSITION.

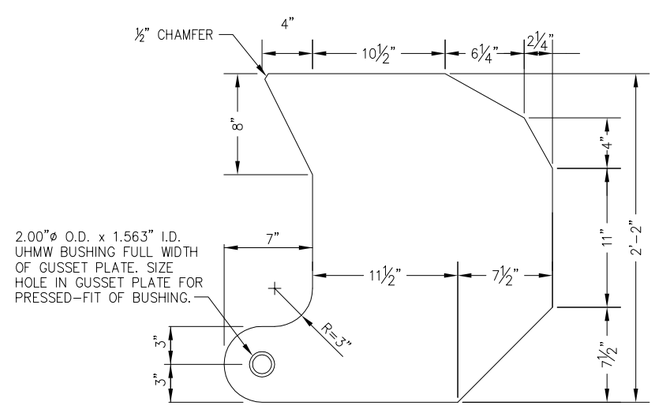

HINGE GUSSET PLATE

1 1/4"t ALUMINUM PLATE

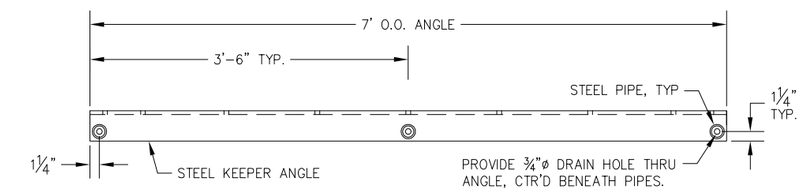

B KEEPER ANGLE/HANDRAIL PLAN

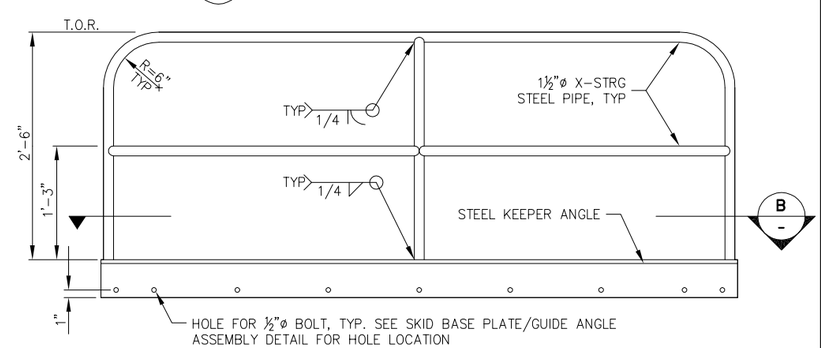

KEEPER ANGLE/HANDRAIL ELEVATION

(2 TOTAL – PROVIDE EACH SIDE OF GANGWAY)

65% DESIGN REVIEW SUBMITTAL

REVISIONS

REV.	DATE	DESCRIPTION	DWN.	CKD.	APP.

PND ENGINEERS, INC.
9360 Glacier Highway Ste 100
Juneau, Alaska 99801
Phone: 907-586-2093
Fax: 907-586-2099
www.pndengineers.com

DESIGN: SRY CHECKED: CRS
DRAWN: SRY APPROVED: CRS
SCALE: NTS
DATE: 12/7/12

HAINES BOROUGH
PORT CHILKOOT DOCK IMPROVEMENTS - PHASE 2

SHEET TITLE: GANGWAY HINGE END DETAILS

A4.06

PND PROJECT NO.: 112048.04 DWG. FILE: 4.06.DWG

SHEET 37 OF 48

H:\11XXX\112048 Port Chilkoot Dock Trestle Replacement\Drawings\PND\4.06 - Gangway Hinge End Details.dwg, 12/7/2012 11:59:01 AM, 1:2

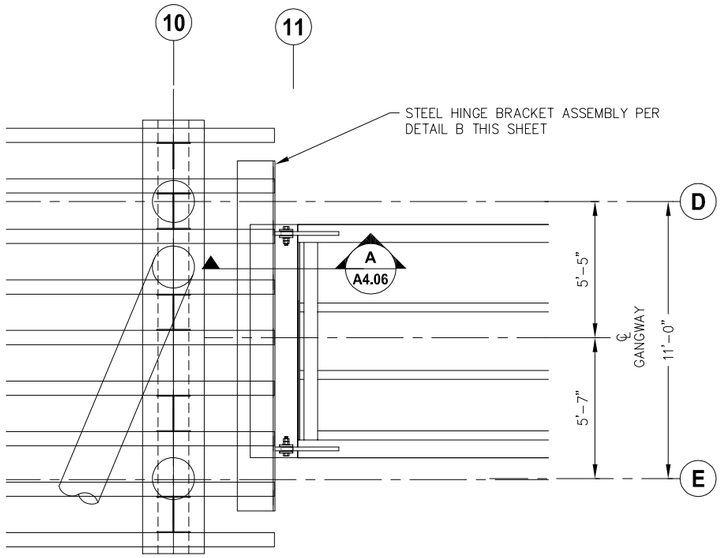

A - GANGWAY HINGE BRACKET PLAN

NOTE: ORDER (9) STRINGERS 25' LONG ON THIS DECK SECTION TO ALLOW FOR FIELD ADJUSTMENT OF UPPER GANGWAY MOUNTING LOCATION. FIELD CUT STRINGERS AS NEEDED TO ACCOMMODATE GANGWAY LOCATION WHICH IS DEFINED BY LOCATION OF EXISTING FLOAT AND PILE FRAMES.

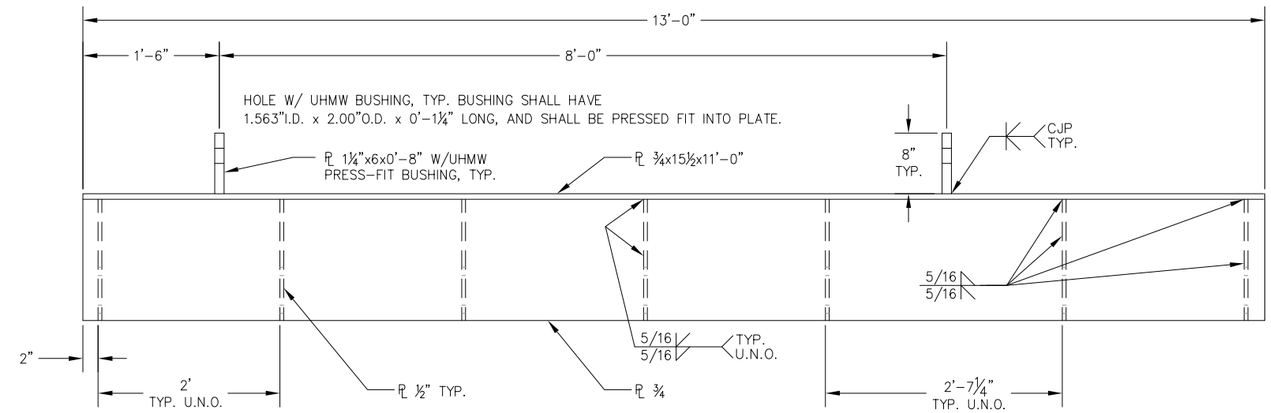

B - GANGWAY HINGE BRACKET DETAIL

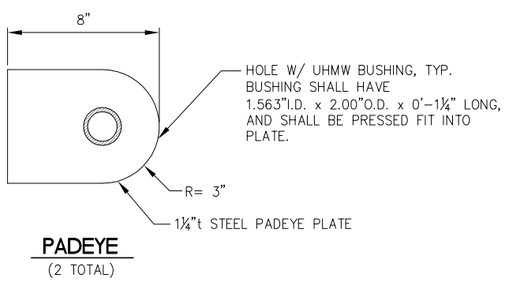

C - GANGWAY HINGE PADEYE ASSEMBLY

65% DESIGN REVIEW SUBMITTAL

REVISIONS

REV.	DATE	DESCRIPTION	DWN.	CKD.	APP.

PND ENGINEERS, INC.
9360 Glacier Highway Ste 100
Juneau, Alaska 99801
Phone: 907-586-2093
Fax: 907-586-2099
www.pndengineers.com

DESIGN: SRY CHECKED: CRS
DRAWN: SRY APPROVED: CRS
SCALE: NTS
DATE: 12/7/12

HAINES BOROUGH
PORT CHILKOOT DOCK
IMPROVEMENTS - PHASE 2

SHEET TITLE: GANGWAY HINGE END DETAILS

PND PROJECT NO.: 112048.04 DWG. FILE: 4.07.DWG

A4.07
SHEET 38 OF 48

N:\11XXX\112048 Port Chilkoot Dock Trestle Replacement\Drawings\FHD\4.07 - Gangway Hinge End Details.dwg, 12/7/2012 11:59:09 AM 1:2

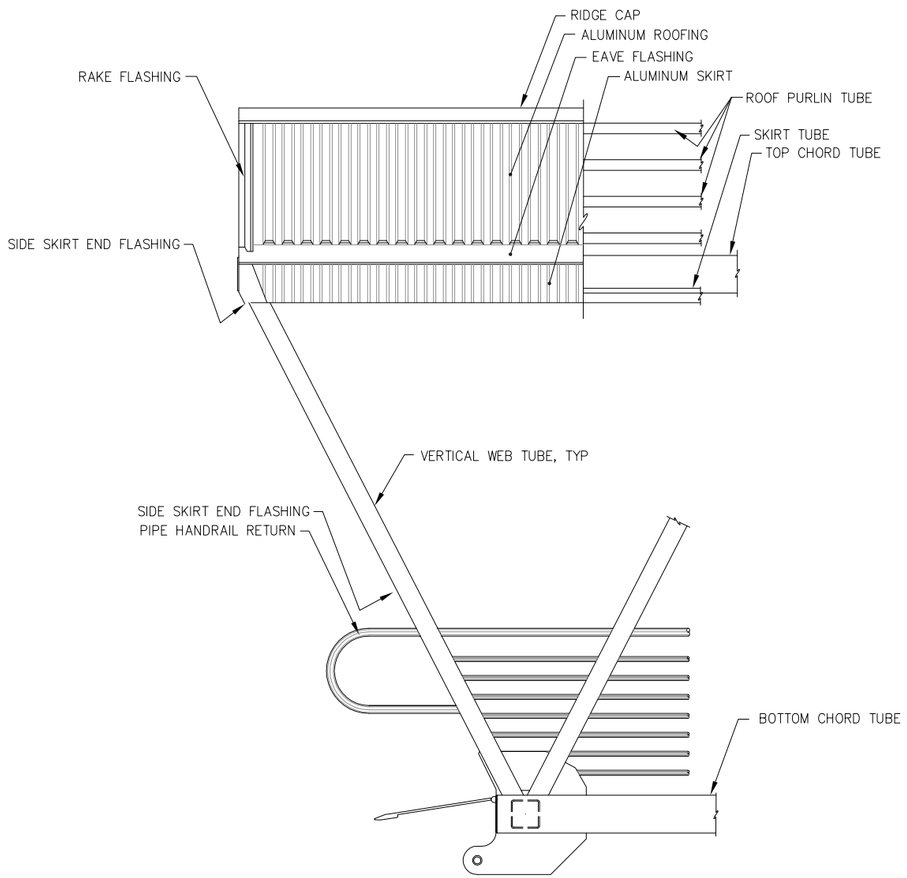

TYPICAL END ELEVATION

(NOTE: SHORE END SHOWN; FLOAT END SIMILAR.)

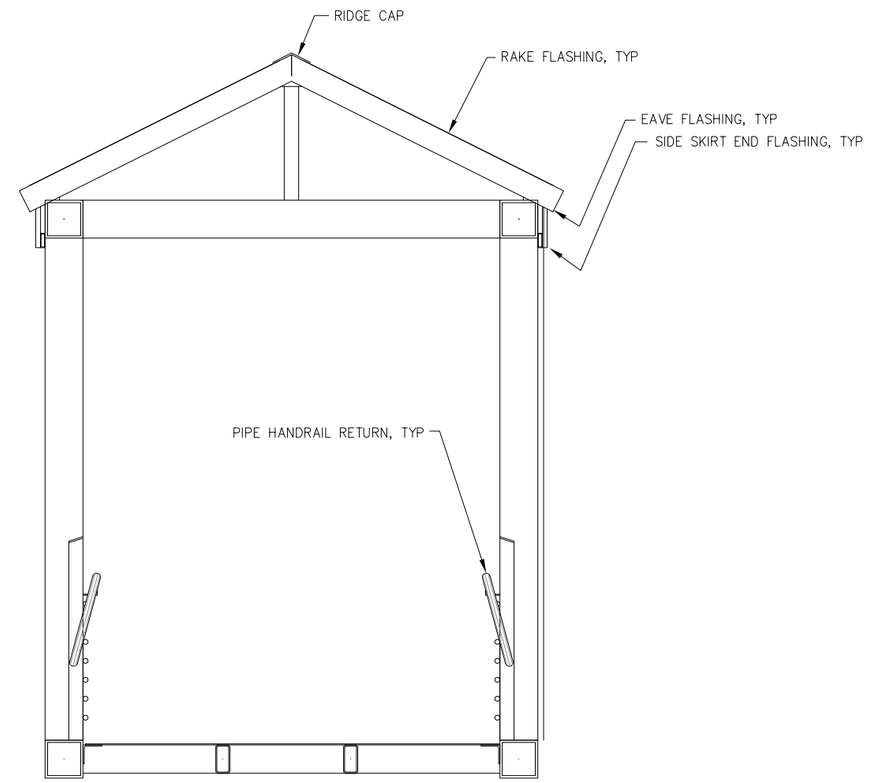

TYPICAL END VIEW

65% DESIGN REVIEW SUBMITTAL

REVISIONS

REV.	DATE	DESCRIPTION	DWN.	CKD.	APP.

P N D ENGINEERS, INC.
9360 Glacier Highway Ste 100
Juneau, Alaska 99801
Phone: 907-586-2093
Fax: 907-586-2099
www.pndengineers.com

DESIGN: SRY CHECKED: CRS
DRAWN: SRY APPROVED: CRS
SCALE: AS SHOWN
DATE: 12/7/12

HAINES BOROUGH
PORT CHILKOOT DOCK
IMPROVEMENTS - PHASE 2

SHEET TITLE:
GANGWAY END ELEVATIONS

PND PROJECT NO.: 112048.04 DWG. FILE: 4.08.DWG

A4.08
SHEET 39 OF 48

N:\11XXX\112048 Port Chilkoot Dock Trestle Replacement\Drawings\FHD\4.08 - Gangway End Elevations.dwg, 12/7/2012 11:59:15 AM, 1:2

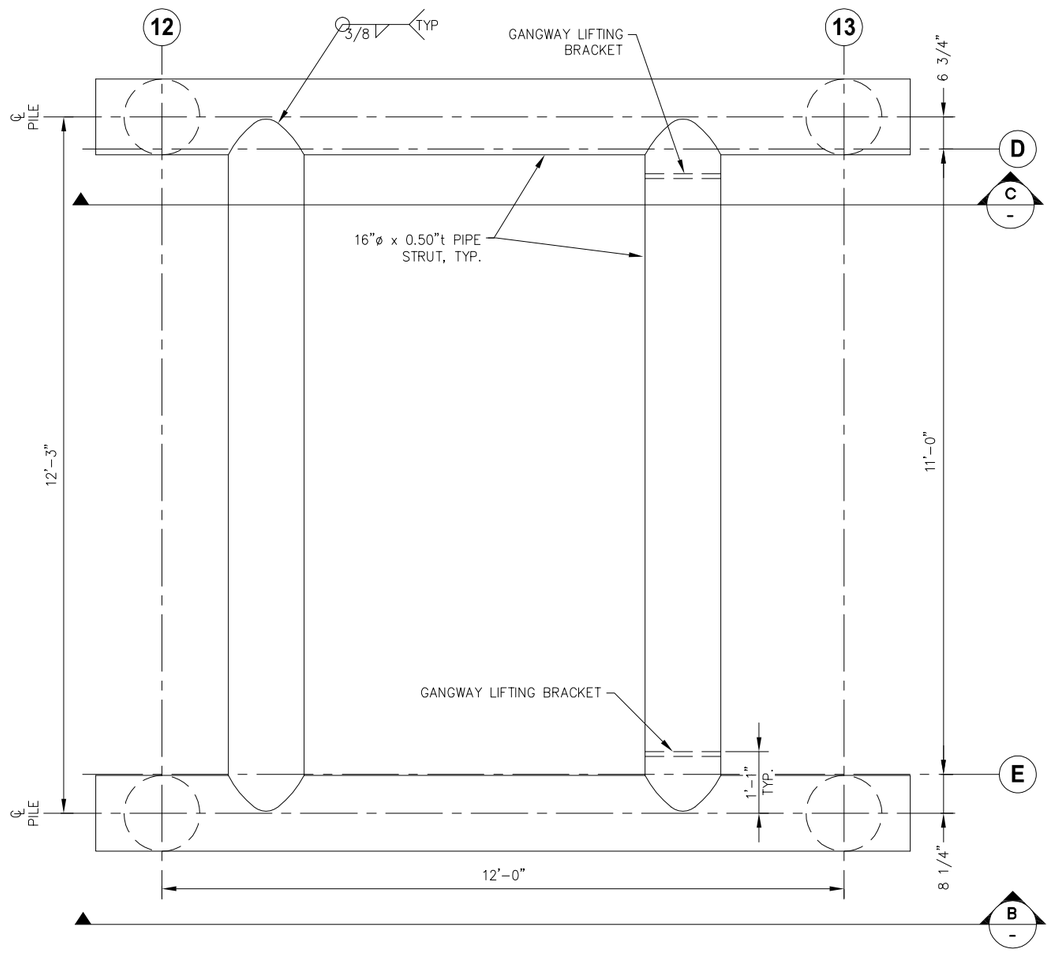

A PILE FRAME PLAN

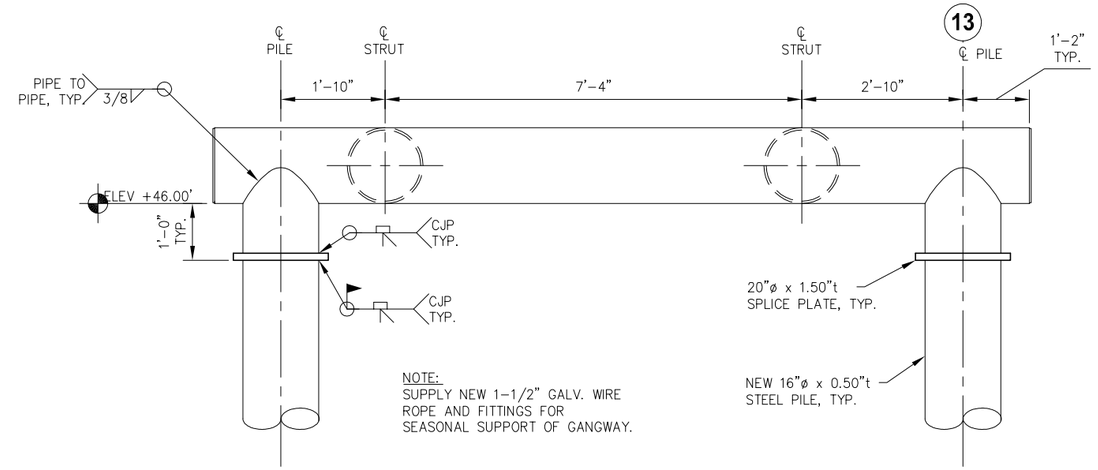

B PILE FRAME ELEVATION

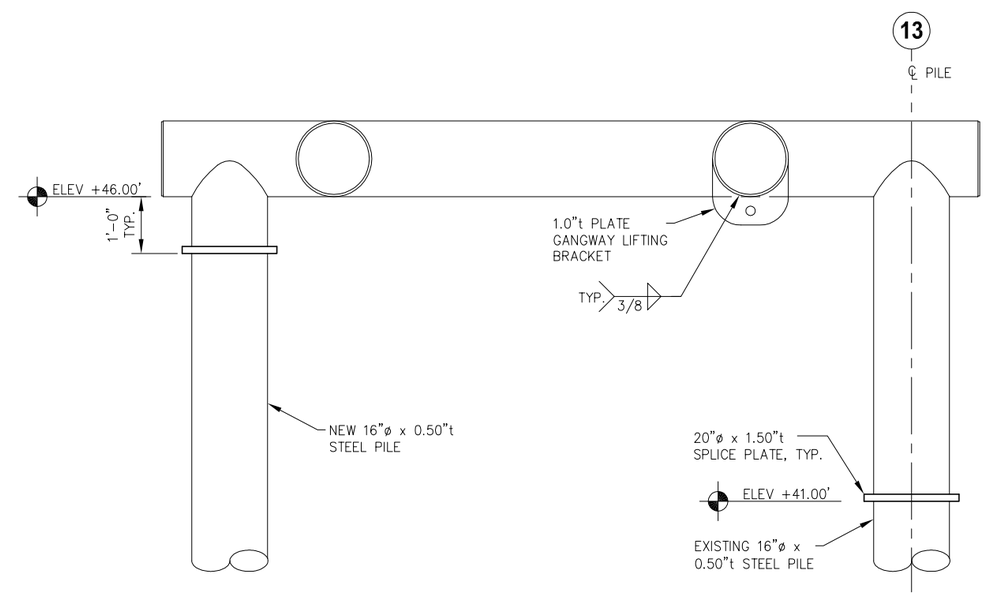

C PILE FRAME ELEVATION

65% DESIGN REVIEW SUBMITTAL

REVISIONS

REV.	DATE	DESCRIPTION	DWN.	CKD.	APP.

PND ENGINEERS, INC.
9360 Glacier Highway Ste 100
Juneau, Alaska 99801
Phone: 907-586-2093
Fax: 907-586-2099
www.pndengineers.com

DESIGN: SRY CHECKED: CRS
DRAWN: SRY APPROVED: CRS
SCALE:
DATE: 12/7/12

HAINES BOROUGH
PORT CHILKOOT DOCK
IMPROVEMENTS - PHASE 2

SHEET TITLE: PILE FRAME DETAILS

PND PROJECT NO.: 112048.04 DWG. FILE: 4.09.DWG

A4.09

SHEET 40 OF 48

N:\11XXX\112048 Port Chilkoot Dock Trestle Replacement\Drawings\FHD\4.09 - Pile Frame Details.dwg, 12/7/2012 11:59:21 AM, 1:2

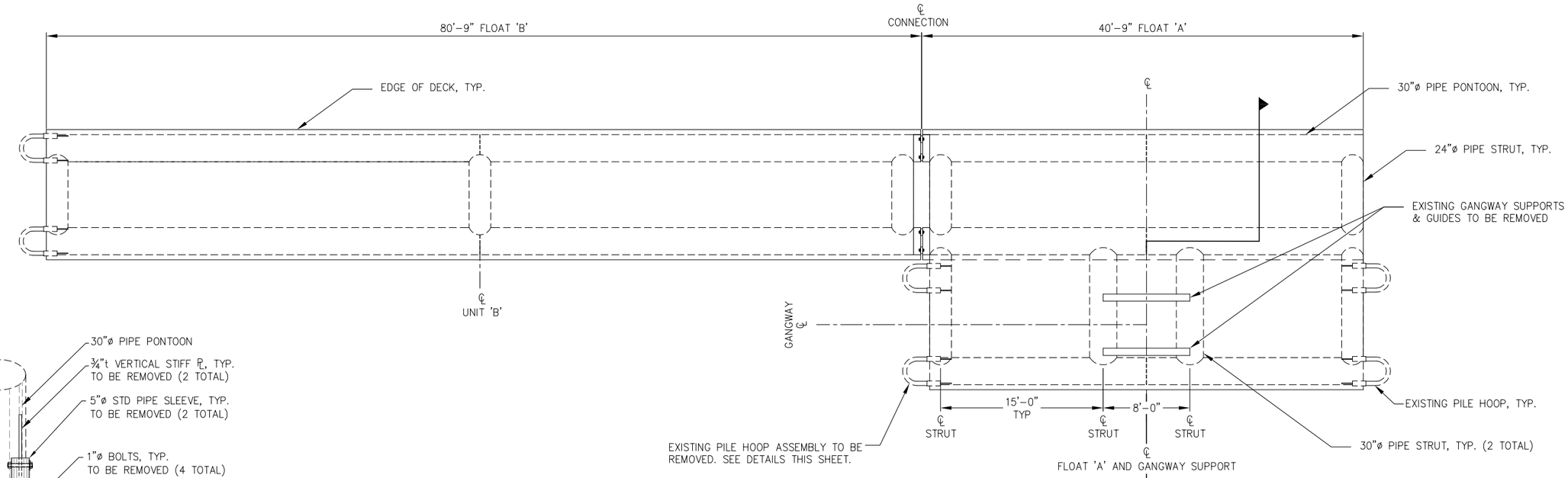

A
-
EXISTING FLOATING DOCK PLAN

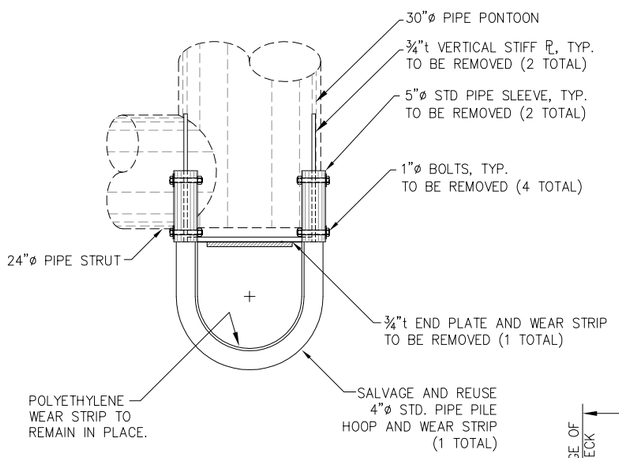

EXISTING PILE HOOP ASSEMBLY DEMOLITION DETAILS

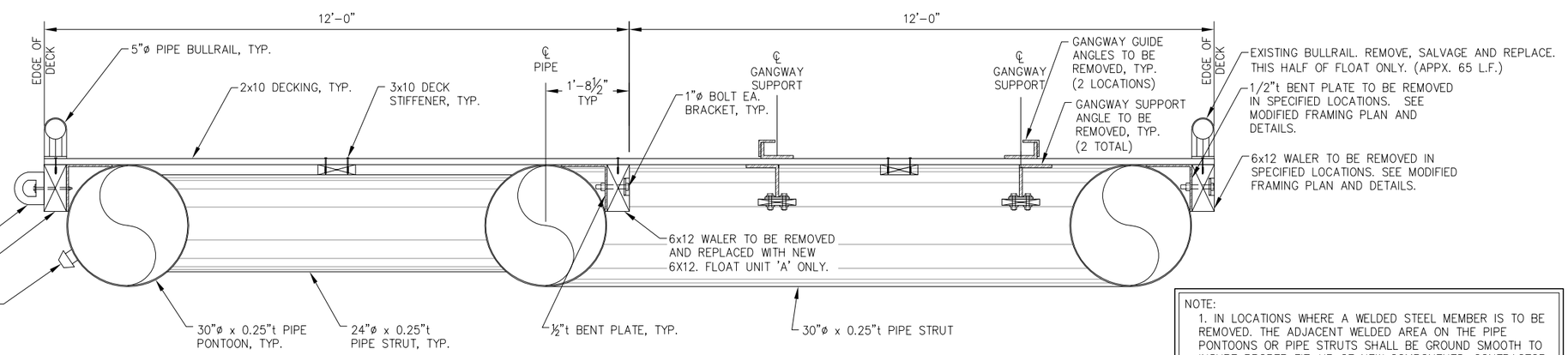

B
-
EXISTING SECTION

NOTE:
1. IN LOCATIONS WHERE A WELDED STEEL MEMBER IS TO BE REMOVED. THE ADJACENT WELDED AREA ON THE PIPE PONTOONS OR PIPE STRUTS SHALL BE GROUND SMOOTH TO INSURE PROPER FIT-UP OF NEW COMPONENTS. CONTRACTOR SHALL USE CARE NOT TO CUT INTO EXISTING PIPE PONTOON OR PIPE STRUTS.

65% DESIGN REVIEW SUBMITTAL

REVISIONS

REV.	DATE	DESCRIPTION	DWN.	CKD.	APP.

P N D ENGINEERS, INC.
9360 Glacier Highway Ste 100
Juneau, Alaska 99801
Phone: 907-586-2093
Fax: 907-586-2099
www.pndengineers.com

DESIGN: MLB CHECKED: JD/SY
DRAWN: PND APPROVED: CRS
SCALE: NTS
DATE: 12/7/12

HAINES BOROUGH
PORT CHILKOOT DOCK IMPROVEMENTS - PHASE 2

SHEET TITLE: EXISTING FLOATING DOCK FRAMING PLAN AND SECTION

PND PROJECT NO.: 112048.04 DWG. FILE: 5.01.DWG

A5.01
SHEET 41 OF 48

N:\11XXX\112048 Port Chilkoot Dock Trestle Replacement\Drawings\PND\5.01 Floating Dock Framing Plan and Section.dwg, 12/7/2012 11:59:26 AM, 1:2

NOTE:
1. REMOVE 2x10 DECKING AS NECESSARY TO INSTALL STEEL COMPONENTS AND BALLAST TANKS.
2. REINSTALL 2x10 DECKING USING 16d GALV. SPIRAL SHANK NAILS, TYP. DO NOT INSTALL SPIRAL SHANK NAILS IN ORIGINAL DECK HOLES, OFFSET TO MISS ORIGINAL HOLES.
3. CONTRACTOR TO PROVIDE NEW 2x10 DECKING AS NEEDED TO ACCOMMODATE DECK EXTENSION. DECK SPLICE JOINTS SHALL BE STAGGERED. SUBMIT DECK LAYOUT FOR ENGINEER APPROVAL.
4. NEW 1/2"t BENT PLATE BRACKETS FOR WALER/BALAST TANK CONNECTION TO PIPE PONTOON SHALL BE FIELD LOCATED AND INSTALLED. THE BRACKETS SHALL BE SPACED AT 4'-0" MAX. THERE SHALL BE A MINIMUM OF (4) BRACKETS ON EACH SIDE OF THE TYPE A BALLAST TANKS, AND A MINIMUM OF (2) BRACKETS ON EACH SIDE OF THE TYPE B BALLAST TANKS. BRACKET LOCATIONS TO BE APPROVED BY ENGINEER PRIOR TO WELDING.
5. CONTRACTOR MAY NEED TO RELOCATE EXISTING 1/2"t BENT PLATE BRACKETS TO MEET ABOVE CRITERIA.

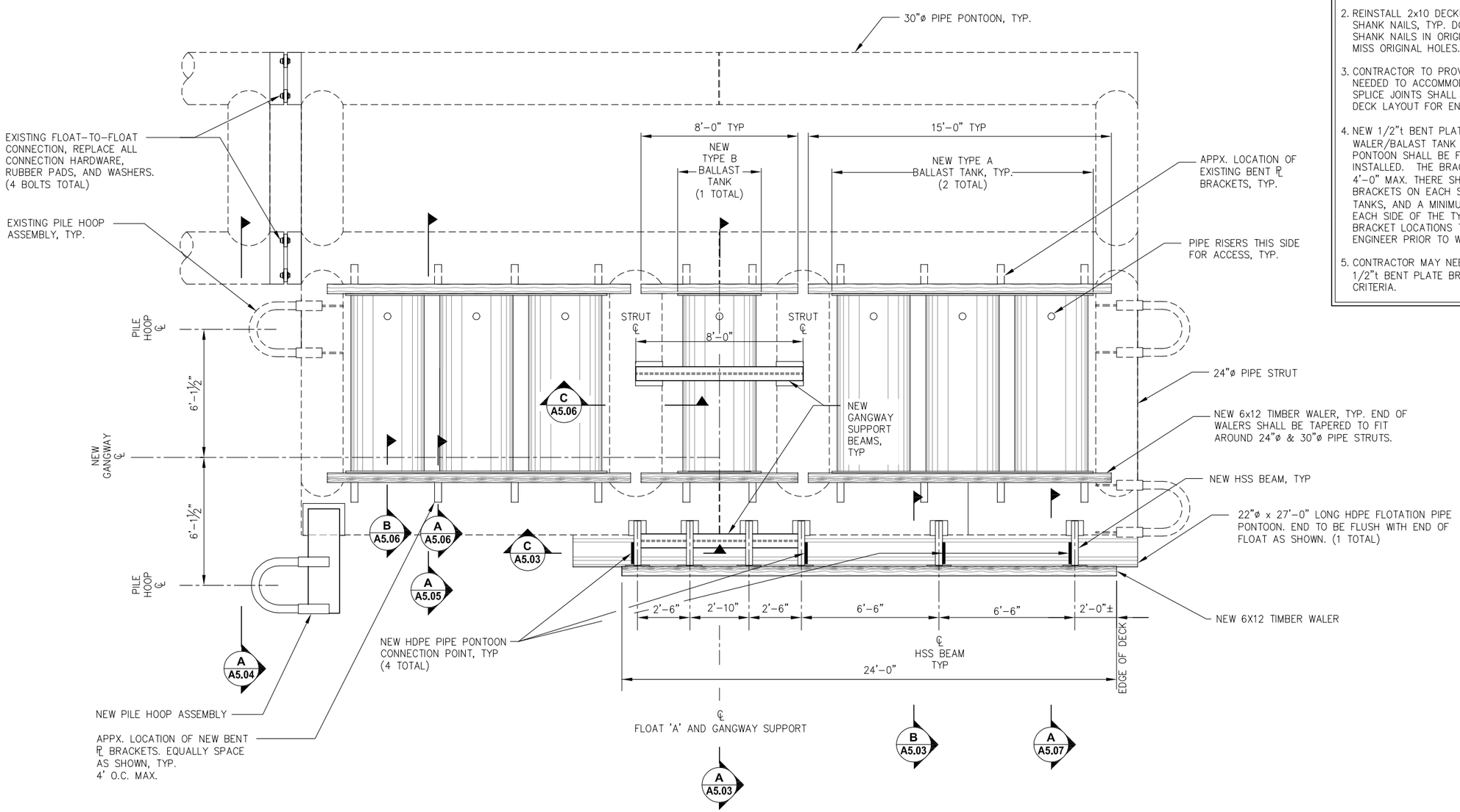

MODIFIED FRAMING PLAN

65% DESIGN REVIEW SUBMITTAL

REVISIONS

REV.	DATE	DESCRIPTION	DWN.	CKD.	APP.

PND ENGINEERS, INC.
9360 Glacier Highway Ste 100
Juneau, Alaska 99801
Phone: 907-586-2093
Fax: 907-586-2099
www.pndengineers.com

DESIGN: MLB CHECKED: JD/SY
DRAWN: PJD APPROVED: CRS
SCALE: NTS
DATE: 12/7/12

HAINES BOROUGH
PORT CHILKOOT DOCK IMPROVEMENTS - PHASE 2

SHEET TITLE: FLOAT MODIFICATION PLAN

PND PROJECT NO.: 112048.04 DWG. FILE: 5.02.DWG

A5.02
SHEET 42 OF 48

N:\11XXX\112048 Port Chilkoot Dock Trestle Replacement\Drawings\PND 5.02 Modified Framing Plan.dwg, 12/7/2012 11:59:31 AM, 1:2

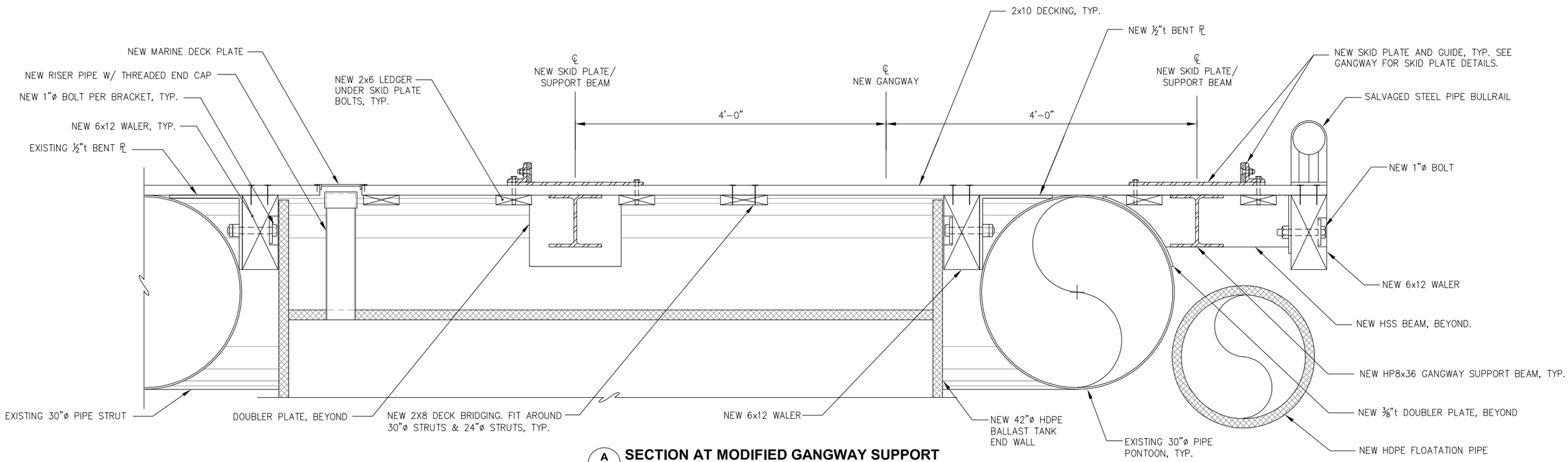

A / A5.02 **SECTION AT MODIFIED GANGWAY SUPPORT**

NOTE:
1. ALL STEEL DOUBLER PLATES SHALL EXTEND 3" FROM THE OUTERMOST DIMENSIONS OF THE MEMBER CONNECTED TO DOUBLER PLATE, U.N.O.,, TYP.
2. ALL WELDS SHALL BE 5/16" FILLET WELDS, ALL AROUND, U.N.O.

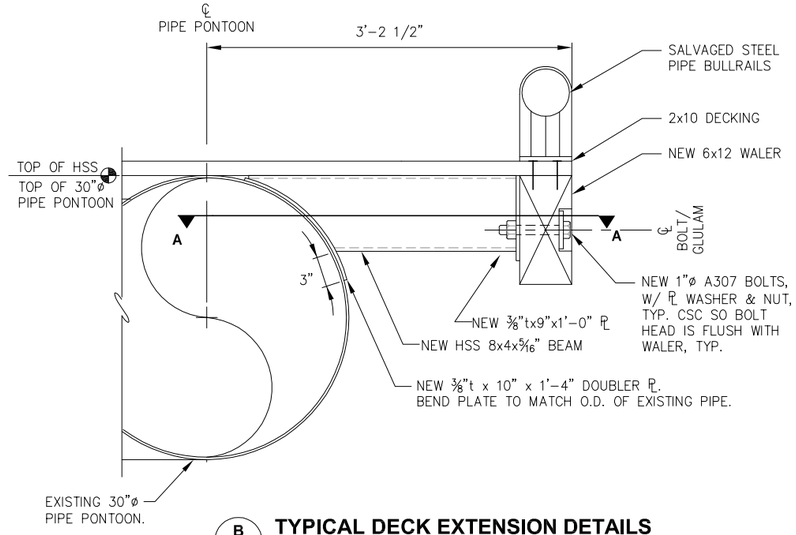

B / A5.02 **TYPICAL DECK EXTENSION DETAILS**
NEW HDPE FLOATATION PIPE NOT SHOWN FOR CLARITY.

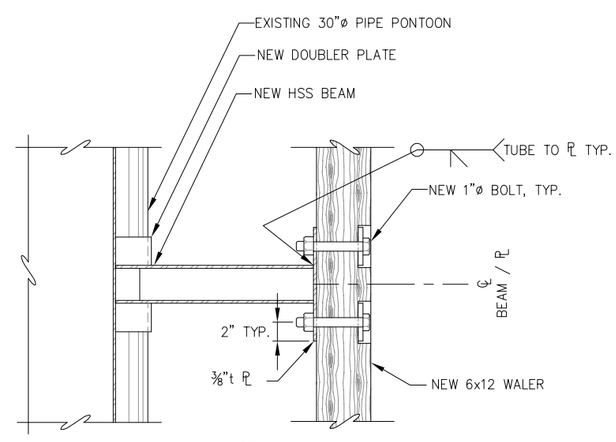

SECTION A-A

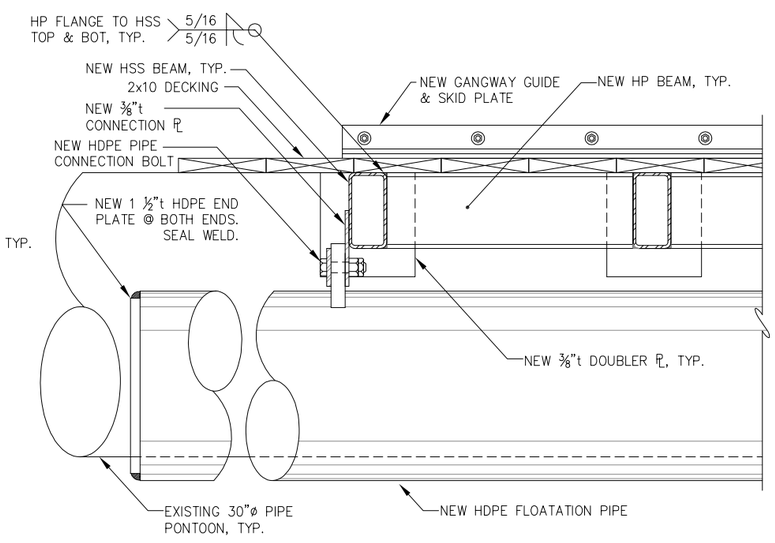

C / A5.02 **SECTION AT HSS BEAM**

65% DESIGN REVIEW SUBMITTAL

REVISIONS

REV.	DATE	DESCRIPTION	DWN.	CKD.	APP.

PND ENGINEERS, INC.
9360 Glacier Highway Ste 100
Juneau, Alaska 99801
Phone: 907-586-2093
Fax: 907-586-2099
www.pndengineers.com

DESIGN: MLB CHECKED: JD/SY
DRAWN: PND APPROVED: CRS
SCALE: NTS
DATE: 12/7/12

HAINES BOROUGH
PORT CHILKOOT DOCK
IMPROVEMENTS - PHASE 2

SHEET TITLE: FLOATING DOCK DETAILS

A5.03

SHEET 43 OF 48

PND PROJECT NO.: 112048.04 DWG. FILE: 5.03.DWG

N:\11XXX\112048 Port Chilkoot Dock Trestle Replacement\Drawings\FHD\5.03 Floating Dock Details.dwg, 12/7/2012 11:59:36 AM, 1:2

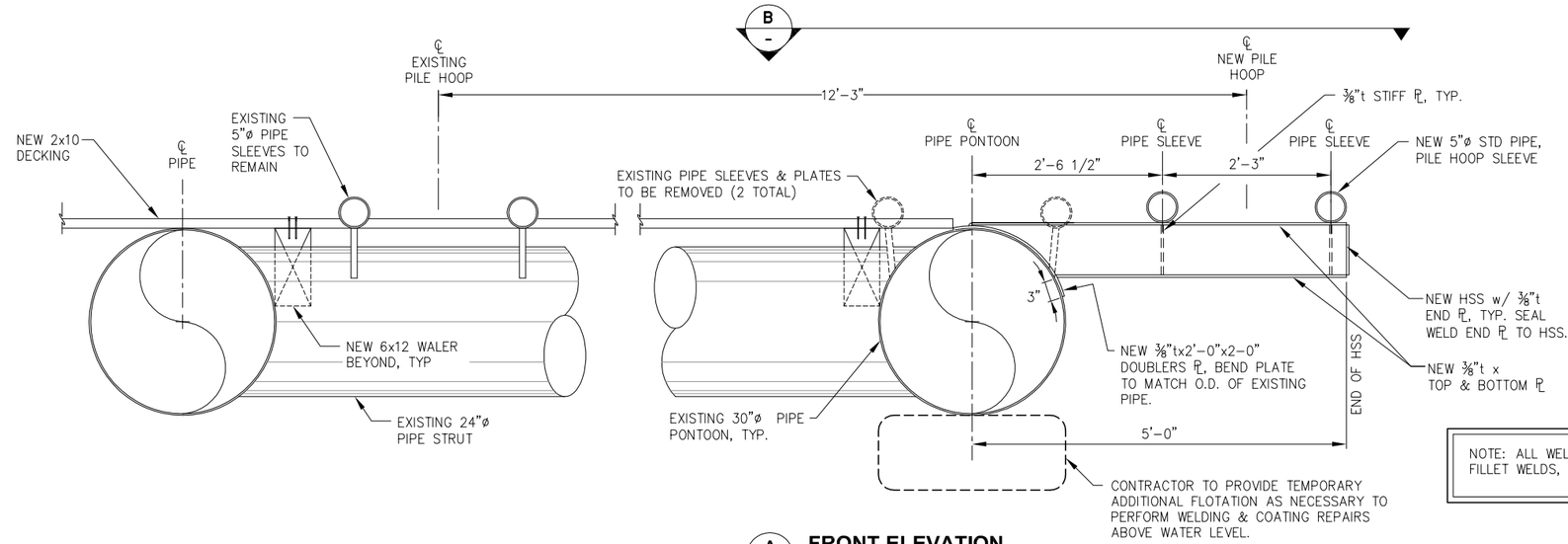

NOTE: ALL WELDS SHALL BE 5/16" FILLET WELDS, ALL-AROUND, UNO.

A / A5.02 **FRONT ELEVATION**

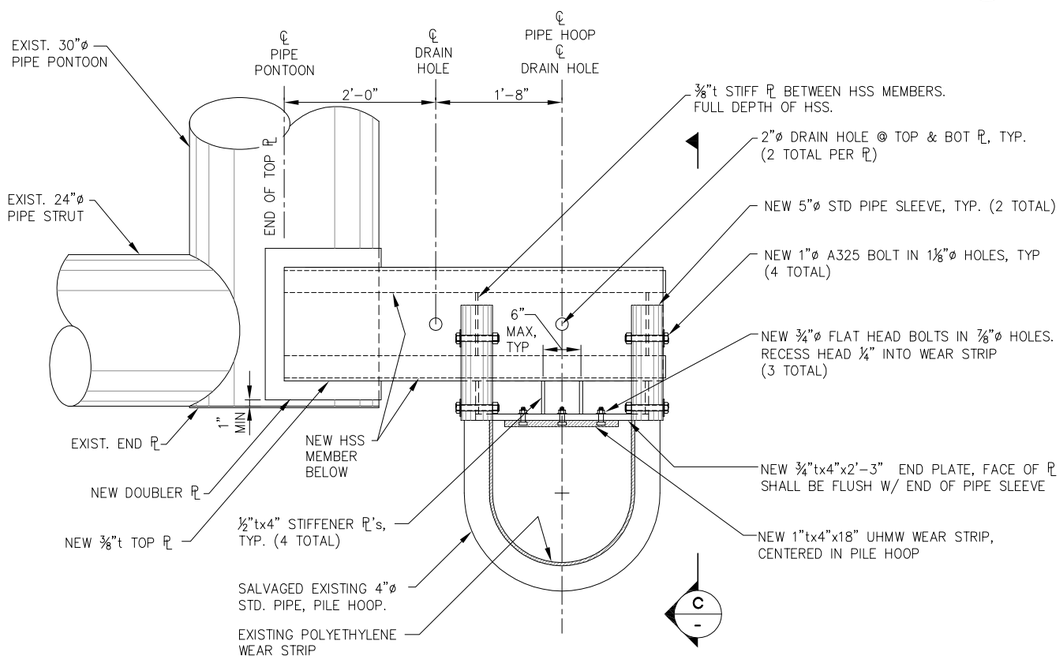

B / - **NEW PILE HOOP ASSEMBLY-PLAN**

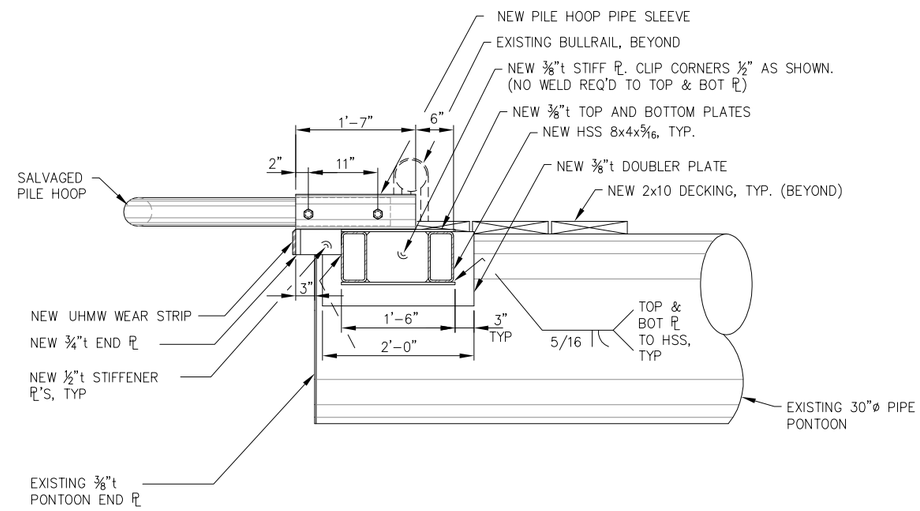

C / - **SIDE ELEVATION**

65% DESIGN REVIEW SUBMITTAL

REVISIONS

REV.	DATE	DESCRIPTION	DWN.	CKD.	APP.

PND ENGINEERS, INC.
9360 Glacier Highway Ste 100
Juneau, Alaska 99801
Phone: 907-586-2093
Fax: 907-586-2099
www.pndengineers.com

DESIGN: MLB CHECKED: JD/SY
DRAWN: PND APPROVED: CRS
SCALE: NTS
DATE: 12/7/12

HAINES BOROUGH
PORT CHILKOOT DOCK IMPROVEMENTS - PHASE 2

SHEET TITLE: **FLOATING DOCK DETAILS**

PND PROJECT NO.: 112048.04 DWG. FILE: 5.04.DWG

A5.04
SHEET 44 OF 48

H:\11XXX\112048 Port Chilkoot Dock Trestle Replacement\Drawings\PND\5.04 Floating Dock Details.dwg, 12/7/2012 11:59:40 AM, 1:2

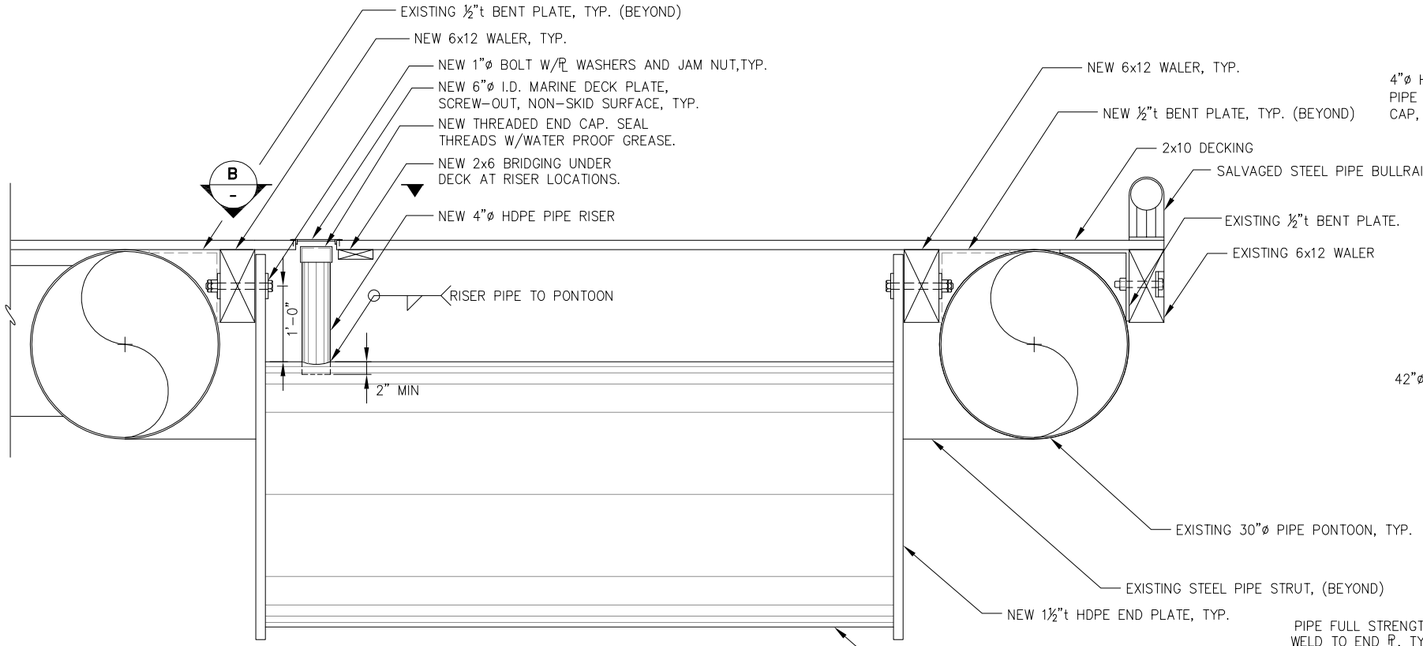

A
A5.02
BALLAST TANK ELEVATION

NOTE:
1. THE HOLES IN THE HDPE END WALLS AND NEW TIMBER WALERS SHALL BE FIELD DRILLED TO PREVENT BOLT-UP CONFLICTS WITH BENT PLATE BRACKETS (NEW OR EXISTING).

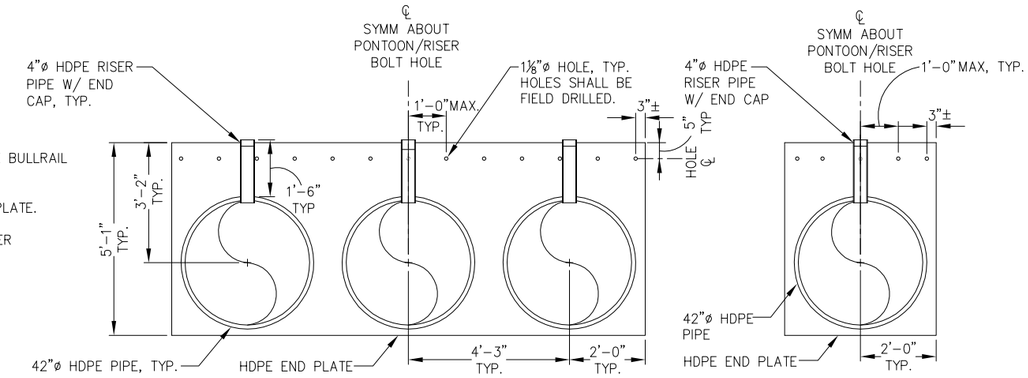

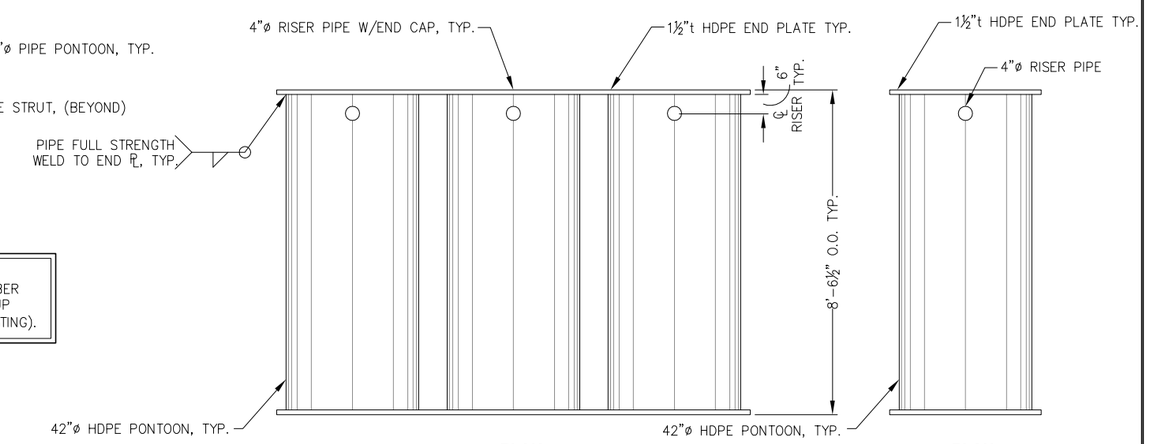

TYPE A BALLAST TANK

TYPE B BALLAST TANK

NOTE: DETAILS NOT SHOWN SIMILAR TO TYPE A BALLAST TANK.

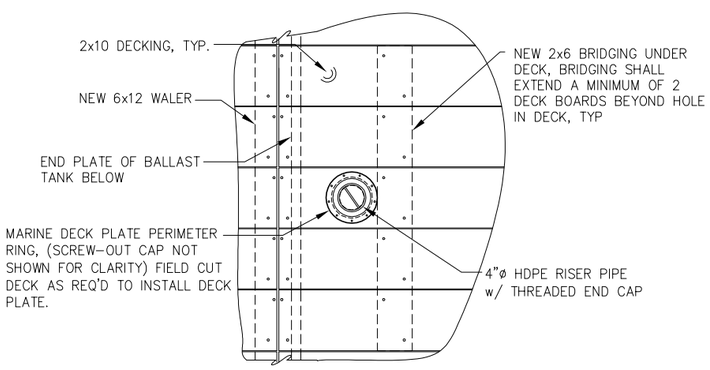

B
-
RISER PIPE PLAN

65% DESIGN REVIEW SUBMITTAL

REVISIONS

REV.	DATE	DESCRIPTION	DWN.	CKD.	APP.

P N D ENGINEERS, INC.
9360 Glacier Highway Ste 100
Juneau, Alaska 99801
Phone: 907-586-2093
Fax: 907-586-2099
www.pndengineers.com

DESIGN: MLB CHECKED: JD/SY
DRAWN: PND APPROVED: CRS
SCALE: NTS
DATE: 12/7/12

HAINES BOROUGH
PORT CHILKOOT DOCK
IMPROVEMENTS - PHASE 2

SHEET TITLE:
FLOATING DOCK DETAILS

PND PROJECT NO.: 112048.04 DWG. FILE: 5.05.DWG

A5.05
SHEET 45 OF 48

N:\1XXX\112048 Port Chilkoot Dock Trestle Replacement\Drawings\PND\5.05 Floating Dock Details.dwg, 12/7/2012 11:59:46 AM, 1:2

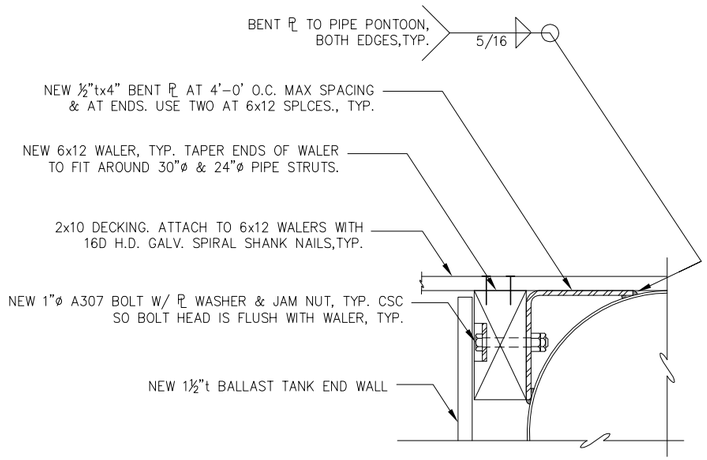

A / A5.02 WALER-TO-BENT PLATE CONNECTION DETAILS

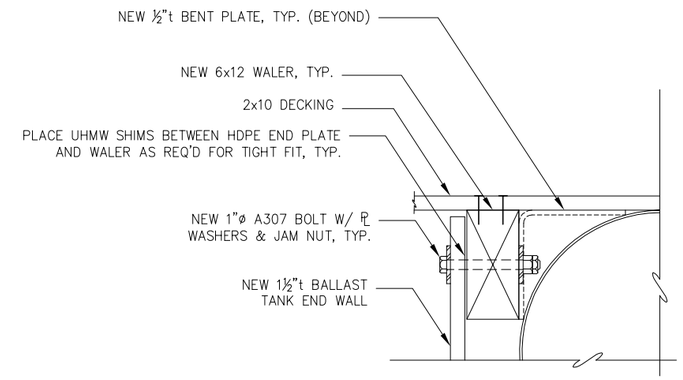

B / A5.02 BALLAST TANK-TO-WALER CONNECTION DETAILS

NOTE:
1. ALL BALLAST TANK CONNECTION BOLTS TO BE SNUG-TIGHTENED W/JAM NUT TO PREVENT LOOSING.

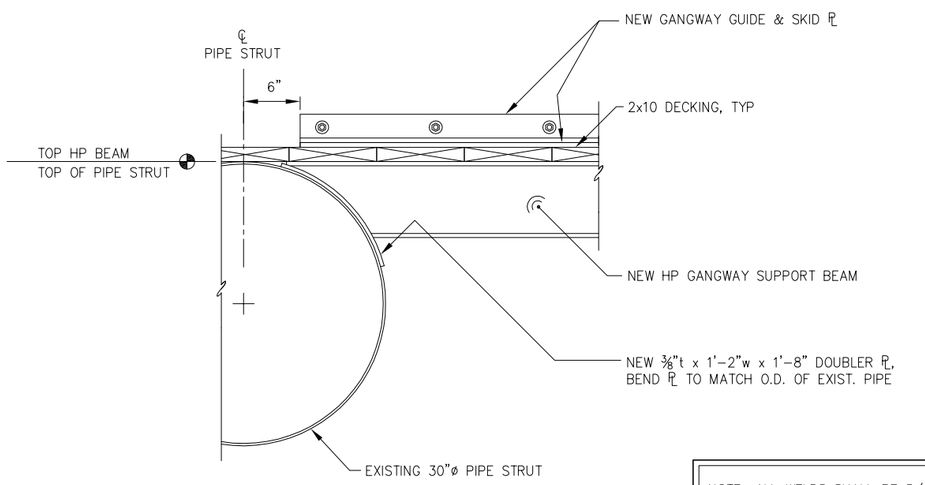

C / A5.02 GANGWAY SUPPORT BEAM CONNECTION
(2 LOCATIONS TOTAL)

NOTE: ALL WELDS SHALL BE 5/16" FILLET WELDS, ALL-AROUND, UNO.

65% DESIGN REVIEW SUBMITTAL

REVISIONS

REV.	DATE	DESCRIPTION	DWN.	CKD.	APP.

PND ENGINEERS, INC.
9360 Glacier Highway Ste 100
Juneau, Alaska 99801
Phone: 907-586-2093
Fax: 907-586-2099
www.pndengineers.com

DESIGN: MLB CHECKED: JD/SY
DRAWN: PND APPROVED: CRS
SCALE: NTS
DATE: 12/7/12

HAINES BOROUGH
PORT CHILKOOT DOCK
IMPROVEMENTS - PHASE 2

SHEET TITLE: FLOATING DOCK DETAILS

PND PROJECT NO.: 112048.04 DWG. FILE: 5.06.DWG

A5.06
SHEET 46 OF 48

N:\11XXX\112048 Port Chilkoot Dock Trestle Replacement\Drawings\FHD\5.06 Floating Dock Details.dwg, 12/7/2012 11:59:50 AM, 1:2

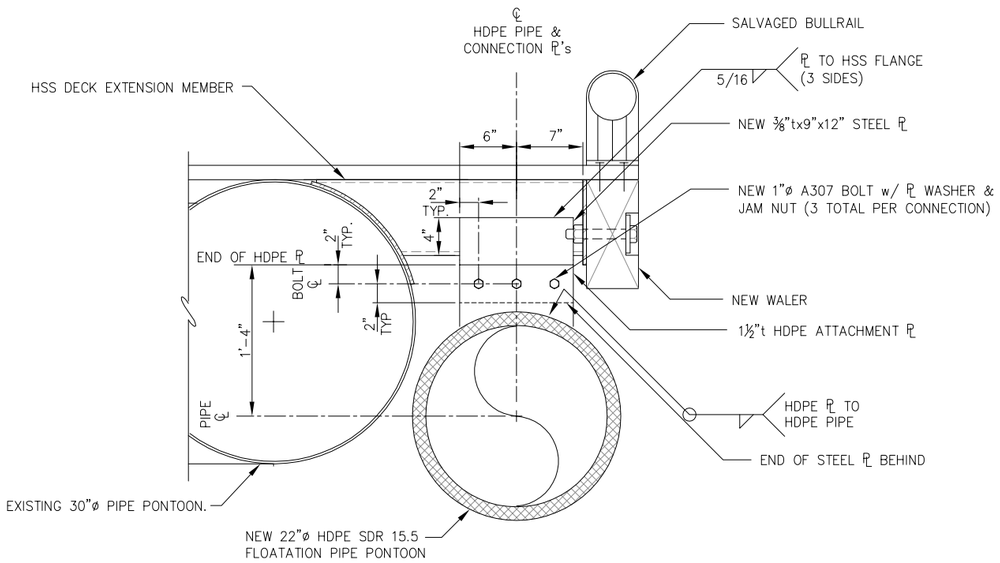

A / A5.02 22"Ø HDPE FLOATATION PIPE PONTOON CONNECTION DETAIL

REPLACE IN KIND

COMPONENT	QTY
1½"ø A325 BOLT W/ NUT & WASHERS (GALV)	4
4"øx ⅜"t RUBBER WASHER W/ 1⁹⁄₁₆"ø HOLE	8
2"tx7½"x7½" RUBBER PAD W/ 1⁹⁄₁₆"ø HOLE (60 DURO)	4

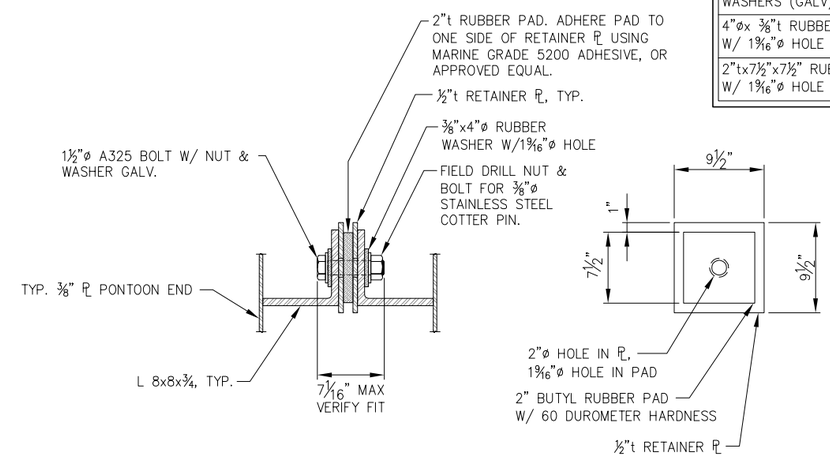

FLOAT CONNECTION REPLACEMENT COMPONENTS

NOTE: SNUG-TIGHTEN BOLT SO THAT THE RUBBER IS SLIGHTLY COMPRESSED. THE NUT SHALL BE LOCKED WITH A COTTER PIN.

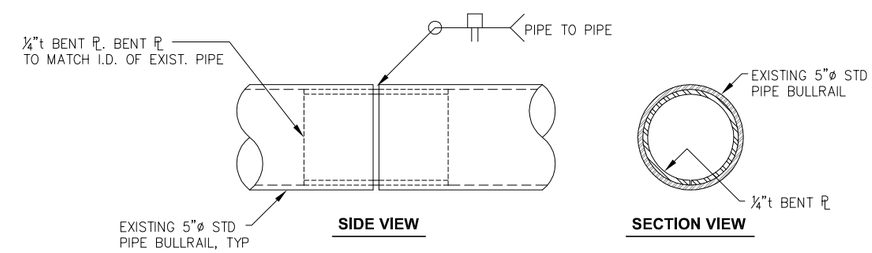

BULLRAIL MODIFICATION DETAIL

NOTE: REDUCE LENGTH OF SALVAGED BULLRAILS AS NEEDED TO FIT ALONG MODIFIED PERIMETER OF FLOAT.

65% DESIGN REVIEW SUBMITTAL

REVISIONS

REV.	DATE	DESCRIPTION	DWN.	CKD.	APP.

P N D ENGINEERS, INC.
9360 Glacier Highway Ste 100
Juneau, Alaska 99801
Phone: 907-586-2093
Fax: 907-586-2099
www.pndengineers.com

DESIGN: MLB CHECKED: JD/SY
DRAWN: PND APPROVED: CRS
SCALE: NTS
DATE: 12/7/12

HAINES BOROUGH
PORT CHILKOOT DOCK IMPROVEMENTS - PHASE 2

SHEET TITLE: FLOATING DOCK DETAILS

PND PROJECT NO.: 112048.04 DWG. FILE: 5.07.DWG

A5.07
SHEET 47 OF 48

N:\11XXX\112048 Port Chilkoot Dock Trestle Replacement\Drawings\PND\5.07 Floating Dock Details.dwg, 12/7/2012 11:59:55 AM, 1:2

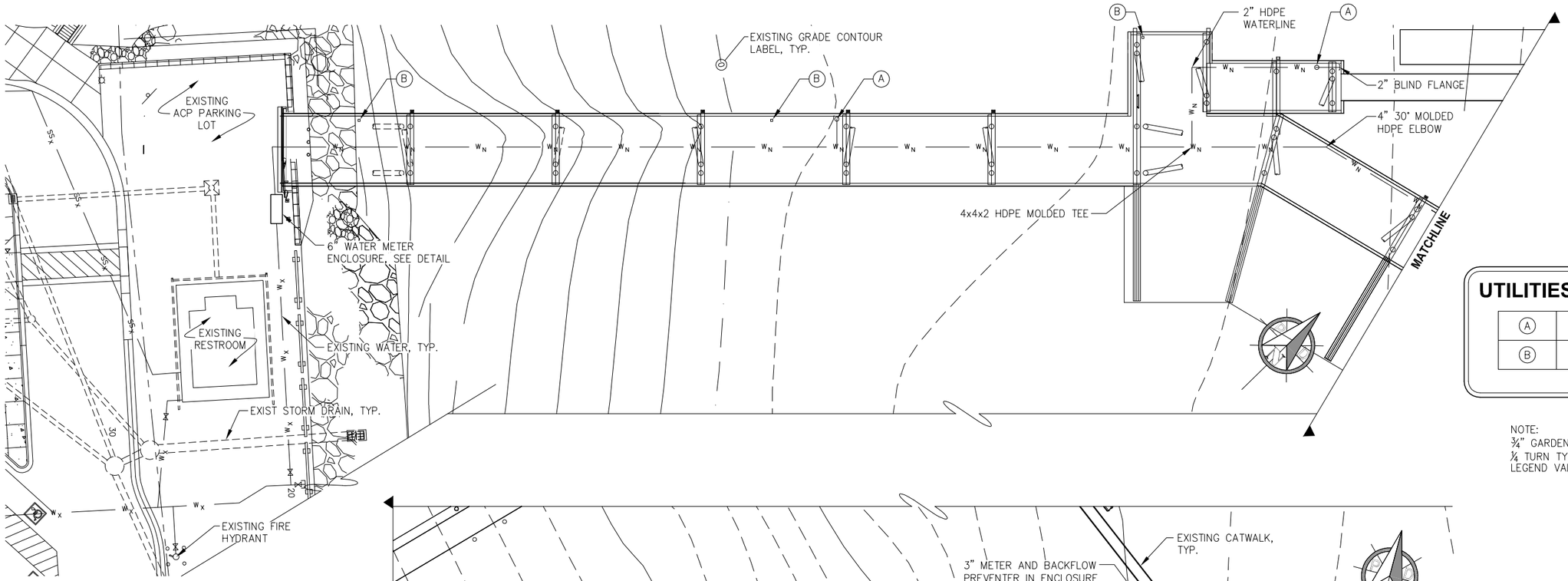

UTILITIES EQUIPMENT TABLE

A	¾" GARDEN HOSE CONNECTION
B	FIRE EXTINGUISHER AND CABINET

NOTE:
¾" GARDEN HOSE CONNECTION SHALL BE ¼ TURN TYPE WITH VACUUM BREAKER. LEGEND VALVE T550 OR APPROVED EQUAL.

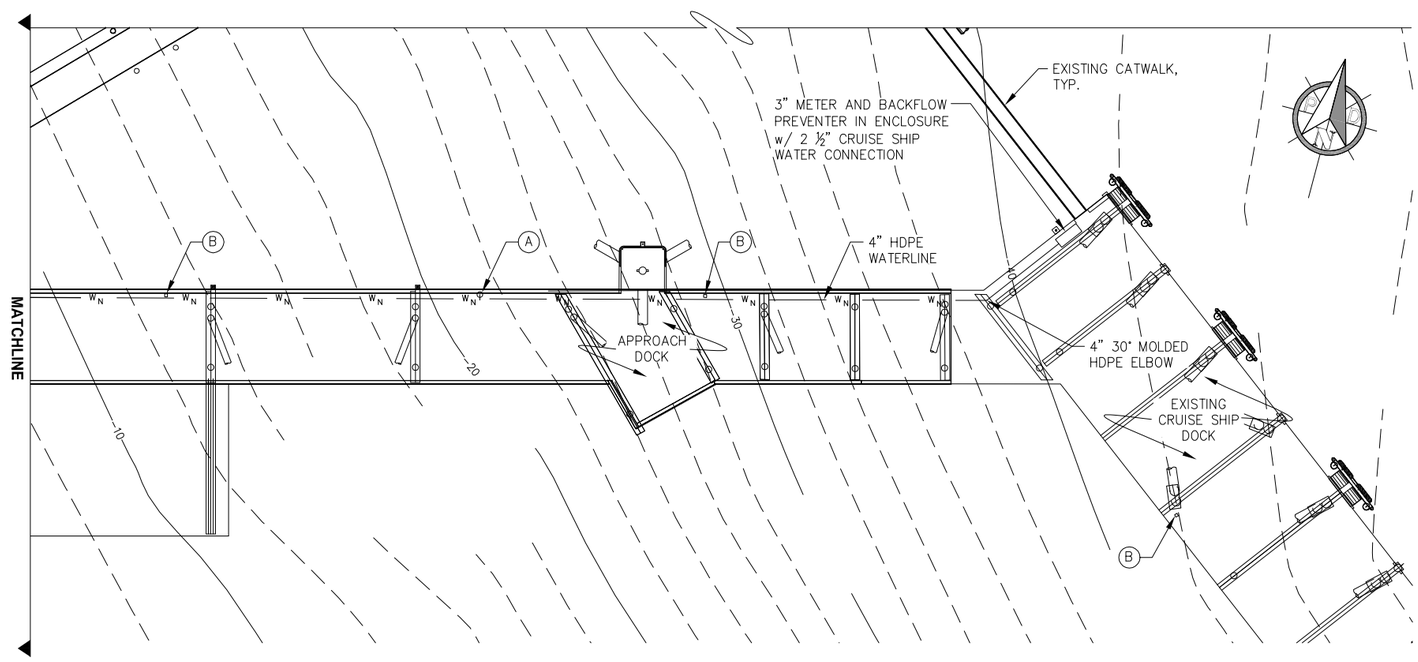

WATER AND FIRE LINES PLAN

65% DESIGN REVIEW SUBMITTAL

REVISIONS

REV.	DATE	DESCRIPTION	DWN.	CKD.	APP.

P N D ENGINEERS, INC.
9360 Glacier Highway Ste 100
Juneau, Alaska 99801
Phone: 907-586-2093
Fax: 907-586-2099
www.pndengineers.com

DESIGN: TCB CHECKED: SY
DRAWN: TCB APPROVED: CRS
SCALE: SCALE IN FEET 0 20 40 FT.
DATE: 12/7/12

HAINES BOROUGH
PORT CHILKOOT DOCK IMPROVEMENTS - PHASE 2

SHEET TITLE: WATER LINES AND FIRE EQUIPMENT PLAN

PND PROJECT NO.: 112048.04 DWG. FILE: 6.01.DWG

A6.01
SHEET 48 OF 48

N:\11XXX\112048 Port Chilkoot Dock Trestle Replacement\Drawings\PND\6.01.dwg, 12/7/2012 12:03:03 PM, 1:2

HAINES BOROUGH, ALASKA

LETNIKOF COVE HARBOR REFURBISHMENT

DECEMBER 2012

LOCATION MAP

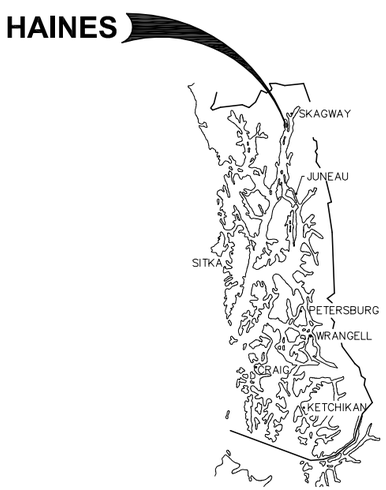

SOUTHEAST ALASKA

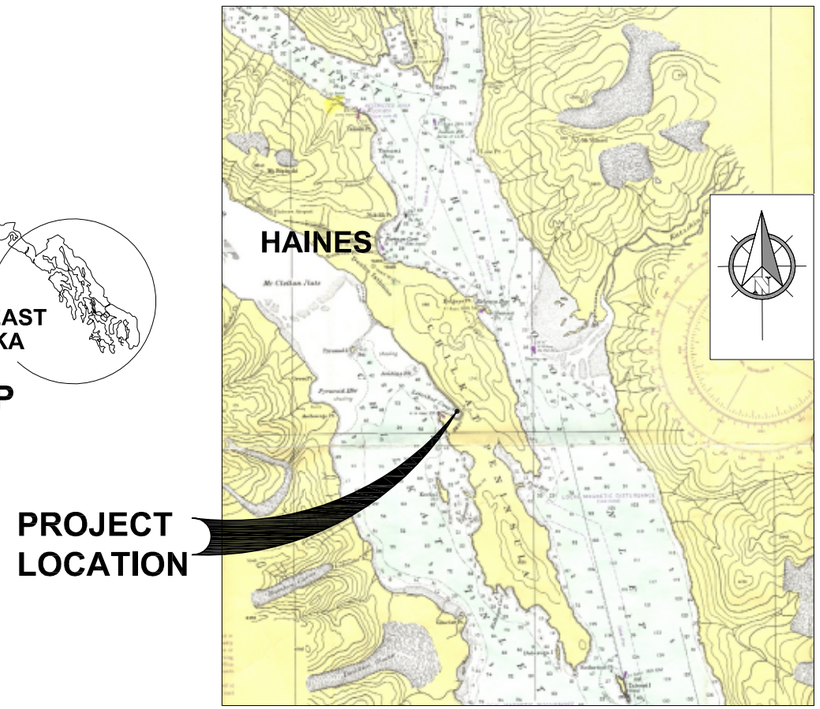

VICINITY MAP

SCALE IN MILES

0 1 2 4

PLAN SET B
DRAWING INDEX

SHEET NO.	DWG. NO.	TITLE
		GENERAL
1 OF 15	B1.01	COVER SHEET, VICINITY MAP AND DRAWING INDEX
2 OF 15	B1.02	LEGEND, ABBREVIATIONS AND GENERAL NOTES
3 OF 15	B1.03	EXISTING CONDITIONS AND DEMOLITION PLAN
4 OF 15	B1.04	DEMOLITION DETAILS
5 OF 15	B1.05	OVERALL SITE PLAN
		APPROACH DOCK AND GANGWAY
6 OF 15	B2.01	APPROACH DOCK AND GANGWAY ELEVATION AND DETAILS
7 OF 15	B2.02	PILE SCHEDULE AND DETAILS
8 OF 15	B2.03	SALVAGED GANGWAY DETAILS
		NEW FLOATS
9 OF 15	B3.01	GANGWAY LANDING FLOAT FRAMING AND DECKING PLAN
10 OF 15	B3.02	SEGMENTAL TIMBER FLOAT DETAILS
11 OF 15	B3.03	SEGMENTAL TIMBER FLOAT DETAILS
12 OF 15	B3.04	SEGMENTAL TIMBER FLOAT DETAILS
		PIPE FLOAT REFURBISHMENT
13 OF 15	B4.01	STEEL PIPE FLOAT REFURBISHMENT PLAN
14 OF 15	B4.02	STEEL PIPE FLOAT DETAILS
15 OF 15	B4.03	ANCHOR CHAIN REPLACEMENT DETAILS

PROJECT SCHEDULE

DESCRIPTION	SCHEDULE
1. IN-WATER WORK RESTRICTIONS: NO WORK ACTIVITY ALLOWED BELOW THE TIDAL ELEVATION.	APRIL 1 – JUNE 15, ANY YEAR
2. EARLIEST ALLOWED FIELD START	OCTOBER 1, 2013
3. SUBSTANTIAL COMPLETION	MAY 1, 2014
4. FINAL COMPLETION OF ALL WORK UNDER THIS CONTRACT	MAY 15, 2014

TIDAL INFORMATION

EXTREME HIGH WATER (EHW)	22.5'
HIGH TIDE LINE (HTL)	21.2'
MEAN HIGH WATER (MHW)	15.8'
MEAN LOWER LOW WATER (MLLW)	0.0'
EXTREME LOW WATER (ELW) ESTIMATED	−6.8'

PND ENGINEERS, INC. (PND) IS NOT RESPONSIBLE FOR SAFETY PROGRAMS, METHODS OR PROCEDURES OF OPERATION, OR THE CONSTRUCTION OF THE DESIGN SHOWN ON THESE DRAWINGS. DRAWINGS ARE FOR THE USE OF THIS PROJECT ONLY AND ARE NOT INTENDED FOR REUSE WITHOUT WRITTEN APPROVAL FROM PND. DRAWINGS ARE ALSO NOT TO BE USED IN ANY MANNER THAT WOULD CONSTITUTE A DETRIMENT DIRECTLY OR INDIRECTLY TO PND.

65% DESIGN REVIEW SUBMITTAL

REVISIONS

REV.	DATE	DESCRIPTION	DWN.	CKD.	APP.

PND ENGINEERS, INC.
9360 Glacier Highway Suite 100
Juneau, Alaska 99801
Phone: 907-586-2093
Fax: 907-586-2099
www.pndengineers.com

DESIGN: BMI/MLB CHECKED: CRS
DRAWN: WRB APPROVED: CRS
SCALE: AS SHOWN
DATE: 12/7/12

HAINES BOROUGH
LETNIKOF COVE HARBOR
REFURBISHMENT

SHEET TITLE:
COVER SHEET, VICINITY MAP AND DRAWING INDEX

PND PROJECT NO.: 112091 DWG. FILE: 1.01_.DWG

B1.01

SHEET 1 OF 15

H:\11XXX\112091 Letnikof Cove Harbor Scoping\Drawings\PND\1.01 Cover Sheet.dwg, 12/7/2012 12:31:48 PM, 1:2

ABBREVIATIONS

A	
AC	ASBESTOS CEMENT
ACP	ASPHALT CONCRETE PAVEMENT
ADJ	ADJUSTABLE
APPX	APPROXIMATE
AV	AIR RELEASE VALVE
B	
BFV	BUTTERFLY VALVE
BOP	BEGINNING OF PROJECT
BRG	BEARING
BTM	BOTTOM
C	
C&G	CURB & GUTTER
CB	CATCH BASIN
CI	CAST IRON
CIP	CAST-IN-PLACE
CJ	CONTROL JOINT
CL	CENTER LINE
CMP	CORRUGATED METAL PIPE
CO	CLEANOUT
CONC	CONCRETE
CONN	CONNECTION
CONSTR	CONSTRUCTION
CP	CONTROL PANEL
CTR	CENTER
CY	CUBIC YARD
D	
D/DIA	DIAMETER
DL	DEAD LOAD
DIP	DUCTILE IRON PIPE
DIM	DIMENSION
DN	DOWN
DTL	DETAIL
E	
E	EAST
EA	EACH
EJ	EXPANSION JOINT
EL/ELEV	ELEVATION
EOP	END OF PROJECT
EQ	EQUAL
EQUIP	EQUIPMENT
EST	ESTIMATE
EXC	EXCAVATE
EXIST	EXISTING
F	
F&I	FINISHED AND INSTALLED
FC	FRONT FACE OF CURB
FD	FLOOR DRAIN
FGR	FINISHED GRADE
FF	FINISHED FLOOR
FIN	FINISH (ED)
FM	FORCE MAIN SEWER
FND	FOUNDATION
FT	FOOT
FTG	FOOTING
G	
GAL	GALLON
GB	GRADE BREAK
GPM	GALLONS PER MINUTE
GRD	GROUND
GV	GATE VALVE
H	
H&T	HUB & TACK
HD	HEAVY DUTY
HDPE	HIGH DENSITY POLYETHYLENE
HSE	HOUSE
HT	HEIGHT
HWY	HIGHWAY
I	
ID	INSIDE DIAMETER
IE	INVERT ELEVATION
IN	INCH
INCL	INCLUDE (D) (ING)
INSUL	INSULATE (D) (ION)
INV	INVERT
L	
LBS	POUNDS
LF	LINEAR FEET
LL	LIVE LOAD
LOC	LOCATION
LS	LUMP SUM
M	
MAX	MAXIMUM
MECH	MECHANICAL
MFR	MANUFACTURE (R)
MH	MANHOLE
MSF	1000 SQUARE FEET
MTL	MATERIAL (S)
N	
N	NORTH
NFS	NON FROST SUSCEPTIBLE
NIC	NOT IN CONTRACT
NTS	NOT TO SCALE
O	
OBD	OVERBURDEN
OC	ON CENTER
OD	OUTSIDE DIAMETER
OG	ORIGINAL GROUND
OHE	OVERHEAD ELECTRICAL
OPP	OPPOSITE
P	
PCC	PRECAST CONCRETE
PED	PEDESTAL
PER	PERIMETER
PERF	PERFORATE (D)
PI	POINT OF INTERSECTION
PL	PROPERTY LINE
PROJ	PROJECT (ION)
PRV	PRESSURE REDUCING VALVE
PSI	POUND PER SQUARE INCH
PT	POINT, PRESSURE TREATED
PVC	POINT OF VERTICAL CURVATURE
PVMT	PAVEMENT
PVT	POINT OF VERTICAL TANGENCY
Q	
QTY	QUANTITY
R	
RAD	RADIUS
RE	RIM ELEVATION
REF	REFERENCE
REQD	REQUIRED
RET	RETAINING
RO	ROUGH OPENING
R/W	RIGHT OF WAY
S	
S	SOUTH
SD	STORM DRAIN
SDR	STANDARD DIMENSION RATIO
SF	SQUARE FOOT
SI	STREET INTERSECTION
SPEC	SPECIFICATION (S)
SQ	SQUARE
SS	SANITARY SEWER
SSC	SANITARY SEWER CONNECTION
SST	STAINLESS STEEL
SSX	SANITARY SEWER CROSSING
STA	STATION
STD	STANDARD
STL	STEEL
SW	SIDEWALK
SWR	SEWER
SY	SQUARE YARD
SYM	SYMMETRICAL
T	
TBC	TOP BACK OF CURB
TBM	TEMPORARY BENCH MARK
TD	TRENCH DRAIN
TEL	TELEPHONE
TH	TEST HOLE
TV	TELEVISION
TYP	TYPICAL
U	
UBC	UNIFORM BUILDING CODE
UMC	UNIFORM MECHANICAL CODE
UNO	UNLESS NOTED OTHERWISE
UPC	UNIFORM PLUMBING CODE
V	
VB	VALVE BOX
VERT	VERTICAL
W	
W	WEST
W/	WITH
WD	WOOD
WL	WATERLINE
W/O	WITHOUT
X	
XFRMR	TRANSFORMER
<PT	ANGLE POINT

LEGEND

EXISTING	PROPOSED	
		EASEMENT LINE
		℄
		PROPERTY LINE
		EDGE ACP OR GRAVEL ROADWAY
-X—X—X-		FENCE
—E—		UNDERGROUND ELECTRIC LINE
—UE—		UNDERGROUND ELECTRIC/TELEPHONE LINE
—F—		FUEL LINE
—T—		UNDERGROUND TELEPHONE LINE
—S—		UNDERGROUND SANITARY SEWER LINE
—FM—		UNDERGROUND SANITARY SEWER FORCE MAIN
—SD—		UNDERGROUND STORM DRAIN LINE
—TV—		UNDERGROUND TELEVISION LINE
—W—	—W—	UNDERGROUND WATER LINE
—OHE—		OVERHEAD ELECTRIC LINE
E T		ELECTRIC/TELEPHONE MANHOLE
		TREE
		UNDERGROUND ELECTRIC PEDESTAL
UT		UNDERGROUND TELEPHONE PEDESTAL
IP		FOUND 1 1/2"Ø ALUMINUM CAP ON #5 BAR
		IRON PIN OR REBAR
		MONITORING METER
GP		GUY ANCHOR
PP		GUY POLE
		POWER POLE
		UTILITY POLE
		FOUND C.G.S. BRASS CAP MONUMENT
		ELECTRIC TRANSFORMER

EXISTING	PROPOSED	
		STAIRS
W		WATER SERVICE UTILIDOR
		SECTION CORNER/SURVEY MONUMENT
		HUB & TACK
		SPIKE
		PK NAIL
		CHISEL MARK
		FIRE HYDRANT
		STREET SIGNS
		STORM DRAIN MANHOLE
		SANITARY SEWER MANHOLE
CO		SANITARY SEWER CLEANOUT
		KEY BOX/WATER VALVE
		STORM DRAIN CATCH BASIN MANHOLE
		CULVERT OR DRAIN PIPE

A / 12 — SECTION OR DETAIL CALLOUT; LOCATION OF DETAIL OR REFERENCE DRAWING

GENERAL NOTES

1. PROPERTY DISTURBED DURING CONSTRUCTION SHALL BE RESTORED TO ITS PRECONSTRUCTION CONDITION OR BETTER AT NO ADDITIONAL COST.
2. EXISTING UTILITIES & PIPE LOCATIONS ARE DERIVED FROM CITY AS-BUILTS OR FIELD LOCATES. ACTUAL LOCATIONS MAY VARY FROM THOSE SHOWN. DEPTH OF EXISTING UTILITIES SHOWN ON PLANS ARE ASSUMED AND SHALL BE FIELD VERIFIED BY THE CONTRACTOR. OBTAIN LOCATES BEFORE YOU DIG.
3. GRADING AND FINAL ALIGNMENT OF UTILITIES & PIPING ARE SUBJECT TO MINOR REVISIONS BY THE ENGINEER TO FIT SITE CONDITIONS, AT NO ADDITIONAL COST.
4. CONTRACTOR SHALL COORDINATE WITH ALL AFFECTED CITY DEPARTMENTS DURING CONSTRUCTION.

65% DESIGN REVIEW SUBMITTAL

REVISIONS

REV.	DATE	DESCRIPTION	DWN.	CKD.	APP.

PND ENGINEERS, INC.
9360 Glacier Highway Suite 100
Juneau, Alaska 99801
Phone: 907-586-2093
Fax: 907-586-2099
www.pndengineers.com

DESIGN: BMI/MLB CHECKED: CRS
DRAWN: WRB APPROVED: CRS
SCALE: AS SHOWN
DATE: 12/7/12

HAINES BOROUGH
LETNIKOF COVE HARBOR REFURBISHMENT

SHEET TITLE: LEGEND, ABBREVIATIONS, AND GENERAL NOTES

PND PROJECT NO.: 112091 DWG. FILE: 1.02_.DWG

B1.02
SHEET 2 OF 15

H:\11XXX\112091 Letnikof Cove Harbor Scoping\Drawings\PND\1.02 Legend and Abbr.dwg, 12/7/2012 12:31:52 PM, 1:2

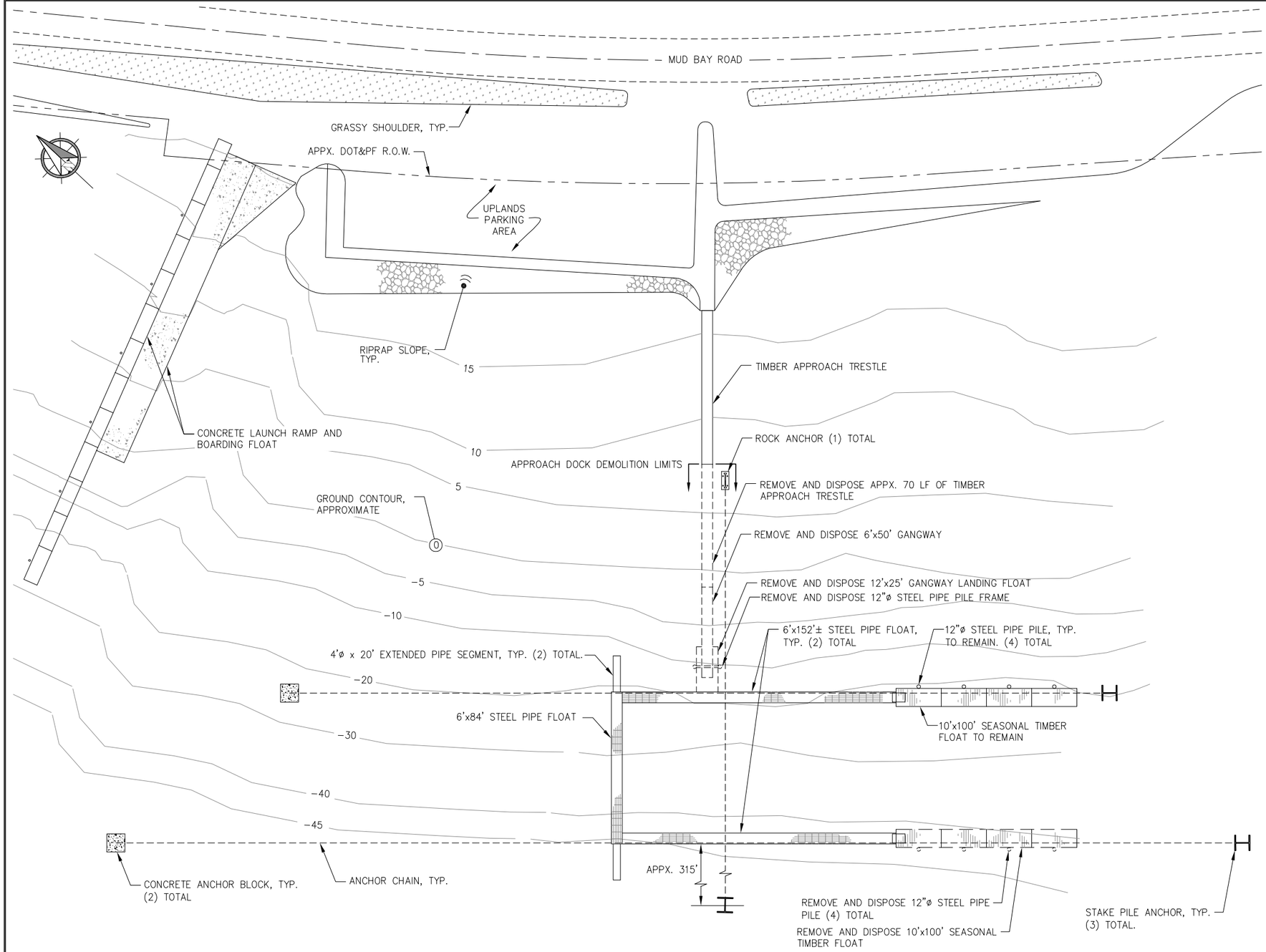

EXISTING CONDITIONS AND DEMOLITION PLAN

DEMOLITION SUMMARY

1. REMOVE AND DISPOSE APPROXIMATELY 70 LF OF TIMBER APPROACH TRESTLE, (OFFSHORE END), INCLUDING RAILING, DECKING, STRINGERS, CAP BEAM, TIMBER PILES AND OTHER APPURTENANCES. PILES TO BE REMOVED IN THEIR ENTIRETY.
2. REMOVE AND DISPOSE 6'x50' STEEL GANGWAY INCLUDING MOUNTING HARDWARE AND ALL OTHER MISCELLANEOUS RELATED APPURTENANCES.
3. REMOVE AND DISPOSE 12'x24.5' GANGWAY LANDING FLOAT.
4. REMOVE AND DISPOSE OF 12"ø STEEL PIPE PILE FRAME AT GANGWAY LANDING FLOAT. PILES TO BE REMOVED IN THEIR ENTIRETY.
5. REMOVE AND DISPOSE 10'x100' SEASONAL TIMBER FLOAT ON OFFSHORE SIDE OF FLOAT SYSTEM.
6. REMOVE AND DISPOSE OF (4) 12"ø STEEL PIPE PILES ON OFFSHORE SIDE OF FLOAT SYSTEM. PILES TO BE REMOVED IN THEIR ENTIRETY. ONE PILE HAS BROKEN OFF BELOW LOW WATER LINE. CONTRACTOR SHALL LOCATE AND REMOVE SECTION OF PILE THAT HAS BROKEN OFF AND IS LAYING AT MUDLINE.

GENERAL NOTES:

1. ANCHOR LOCATIONS ARE SHOWN APPX. CONTRACTOR TO VERIFY LOCATION.
2. MOST OF THE EXISTING APPROACH DOCK IS CONSTRUCTED W/ CREOSOTE TREATED TIMBERS AND PILING. CONTRACTOR SHALL DISPOSE IN ACCORDANCE W/ ALL REGULATORY REQUIREMENTS.

LEGEND

- TO BE REMOVED
- CONCRETE ANCHOR BLOCK CONNECTION
- ROCK ANCHOR CONNECTION
- STAKE PILE CONNECTION
- ANCHOR CHAIN

65% DESIGN REVIEW SUBMITTAL

HAINES BOROUGH ALASKA

REVISIONS

REV.	DATE	DESCRIPTION	DWN.	CKD.	APP.

PND ENGINEERS, INC.
9360 Glacier Highway Suite 100
Juneau, Alaska 99801
Phone: 907-586-2093
Fax: 907-586-2099
www.pndengineers.com

DESIGN: BMI/MLB CHECKED: CRS
DRAWN: BMI/WRB APPROVED: CRS
SCALE: SCALE IN FEET 0 30 60 FT.
DATE: 12/7/12

HAINES BOROUGH
LETNIKOF COVE HARBOR REFURBISHMENT

SHEET TITLE: EXISTING CONDITIONS AND DEMOLITION PLAN

PND PROJECT NO.: 112091 DWG. FILE: 1.03_.DWG

B1.03
SHEET 3 OF 15

N:\11XXX\112091 LetnikofCove Harbor Scoping\Drawings\PND\1.03 Existing Conditions.dwg, 12/7/2012 12:31:57 PM, 1:2

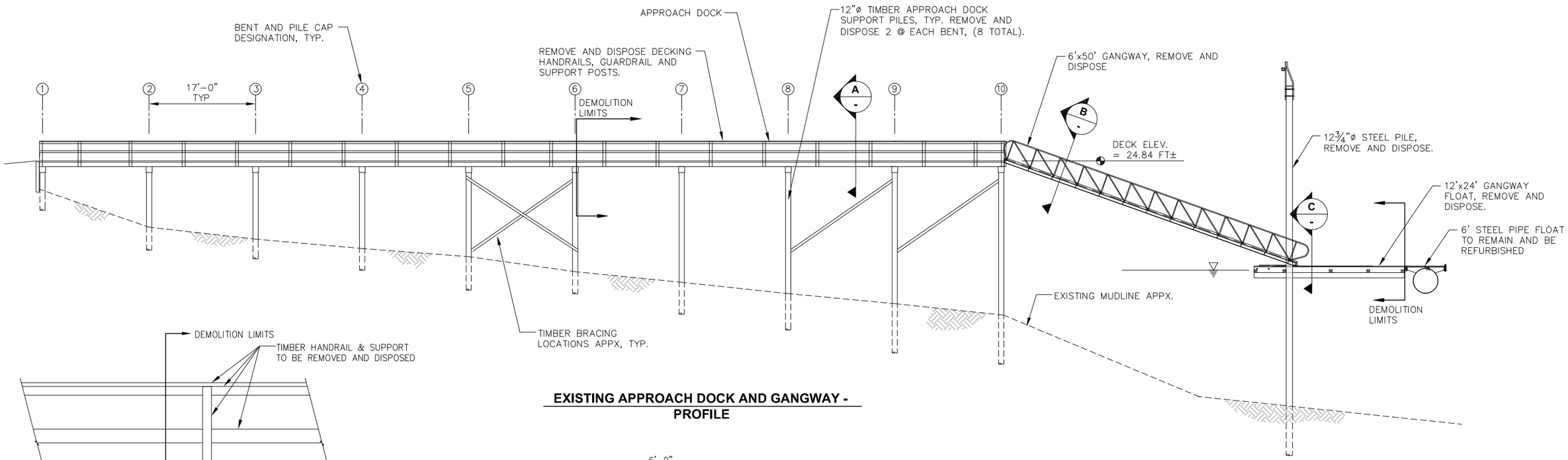

EXISTING APPROACH DOCK AND GANGWAY - PROFILE

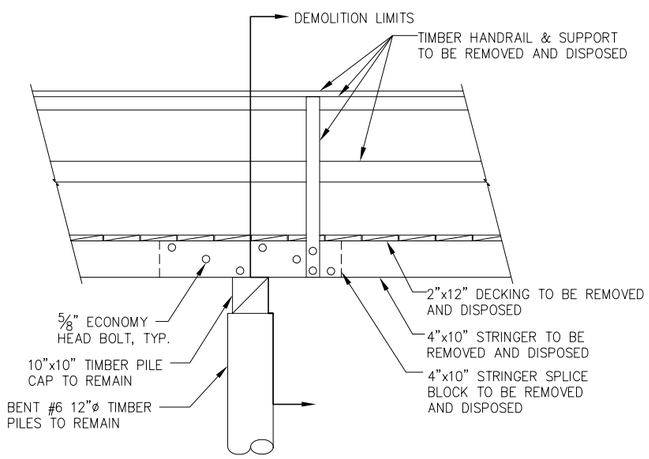

DEMOLITION LIMIT ELEVATION

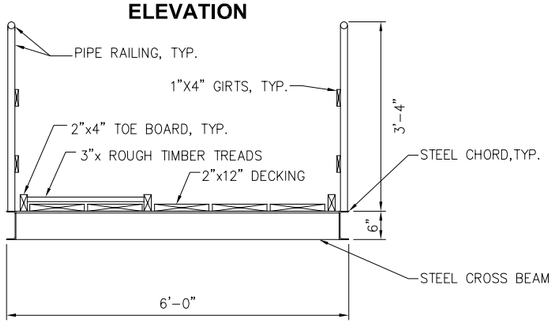

B - TYPICAL GANGWAY SECTION

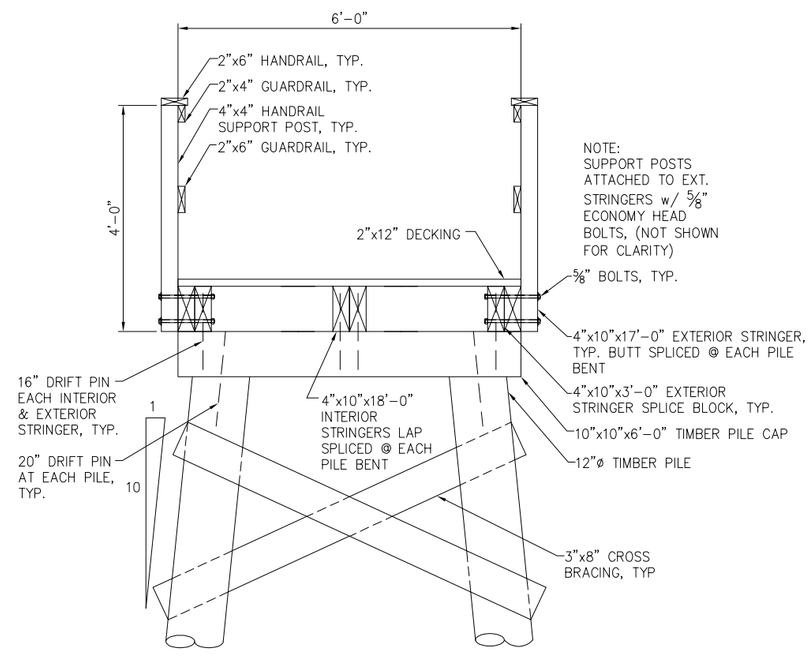

A - TYPICAL APPROACH DOCK SECTION

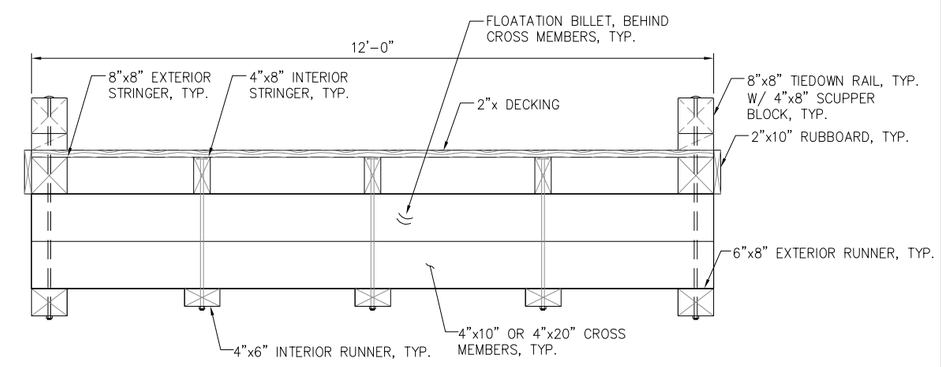

C - TYPICAL GANGWAY FLOAT SECTION

65% DESIGN REVIEW SUBMITTAL

REVISIONS

REV.	DATE	DESCRIPTION	DWN.	CKD.	APP.

PND ENGINEERS, INC.
9360 Glacier Highway Suite 100
Juneau, Alaska 99801
Phone: 907-586-2093
Fax: 907-586-2099
www.pndengineers.com

DESIGN: BMI/MLB CHECKED: CRS
DRAWN: WRB APPROVED: CRS
SCALE:
DATE: 12/7/12

HAINES BOROUGH
LETNIKOF COVE HARBOR REFURBISHMENT

SHEET TITLE:
DEMOLITION DETAILS

PND PROJECT NO.: 112091 DWG. FILE: 1.04_.DWG

B1.04
SHEET 4 OF 15

N:\11XXX\112091 Letnikof Cove Harbor Seaplane\Drawings\FND\1.04 Demolition Details.dwg, 12/7/2012 12:32:02 PM, 1:2

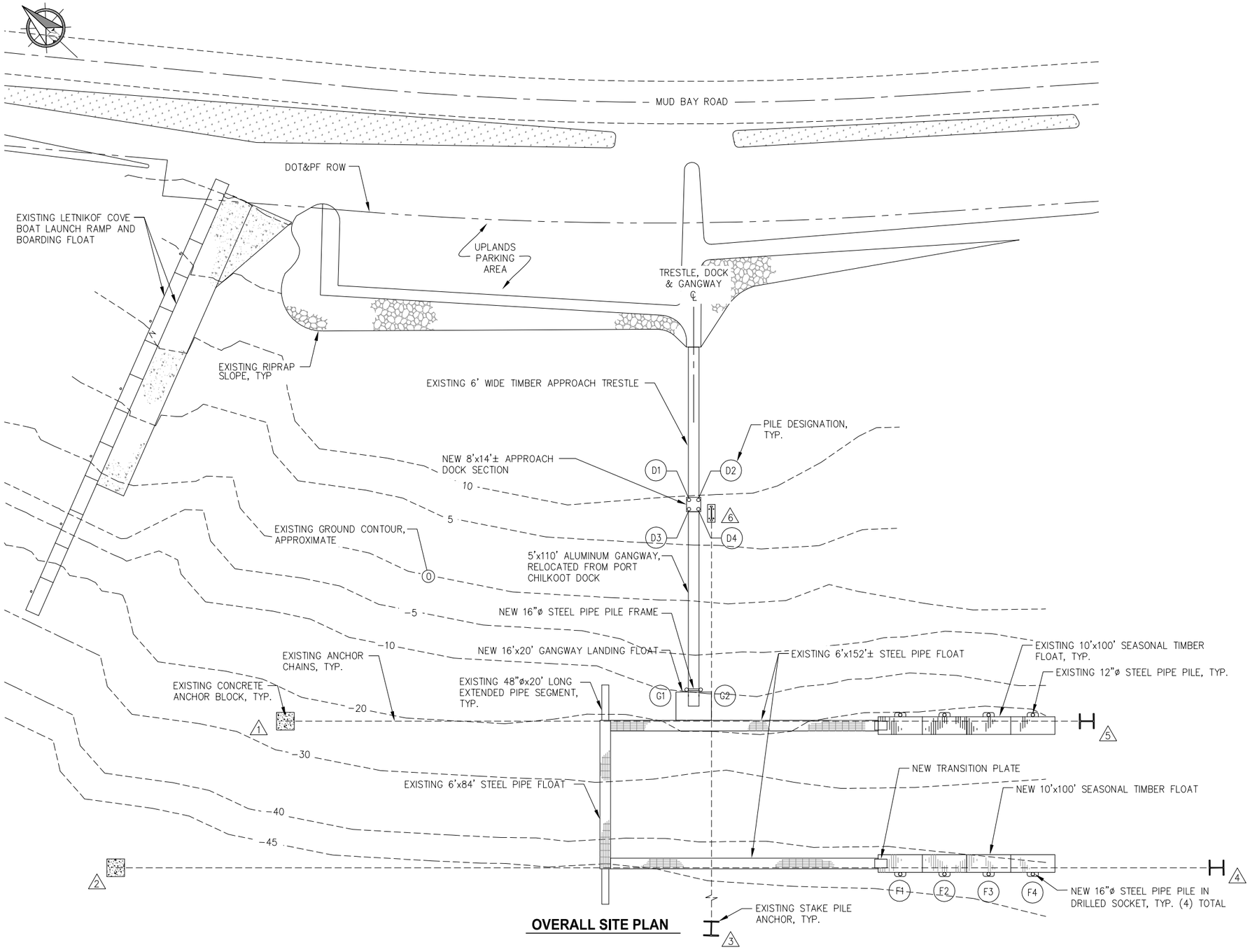

OVERALL SITE PLAN

CONTROL FOR NEW HARBOR COMPONENTS SHALL BE AS FOLLOWS:

1. CENTERLINE OF NEW APPROACH DOCK, GANGWAY AND GANGWAY LANDING FLOAT SHALL ALIGN WITH CENTERLINE OF EXISTING TIMBER APPROACH TRESTLE.
2. CENTERLINE OF NEW SEASONAL TIMBER FLOAT SHALL ALIGN WITH CENTERLINE OF EXIST STEEL PIPE FLOAT.
3. CONTRACTOR SHALL FIELD VERIFY LAYOUT WITH ENGINEER PRIOR TO PILE INSTALLATION.

LEGEND

- CONCRETE ANCHOR BLOCK CONNECTION
- ROCK ANCHOR CONNECTION
- STAKE PILE CONNECTION
- ANCHOR CHAIN
- (D4) PILE DESIGNATION
- (1) ANCHOR DESIGNATION

65% DESIGN REVIEW SUBMITTAL

REVISIONS

REV.	DATE	DESCRIPTION	DWN.	CKD.	APP.

PND ENGINEERS, INC.
9360 Glacier Highway Suite 100
Juneau, Alaska 99801
Phone: 907-586-2093
Fax: 907-586-2099
www.pndengineers.com

DESIGN: BMI/MLB CHECKED: CRS
DRAWN: WRB APPROVED: CRS
SCALE: SCALE IN FEET 0 30 60 FT.
DATE: 12/7/12

HAINES BOROUGH
LETNIKOF COVE HARBOR REFURBISHMENT

SHEET TITLE: **OVERALL SITE PLAN**

PND PROJECT NO.: 112091 DWG. FILE: 1.05_.DWG

B1.05
SHEET 5 OF 15

N:\11XXX\112091 Letnikof Cove Harbor Scoping\Drawings\FHD\1.05 Site Plan.dwg, 12/7/2012 12:32:08 PM, 1:2

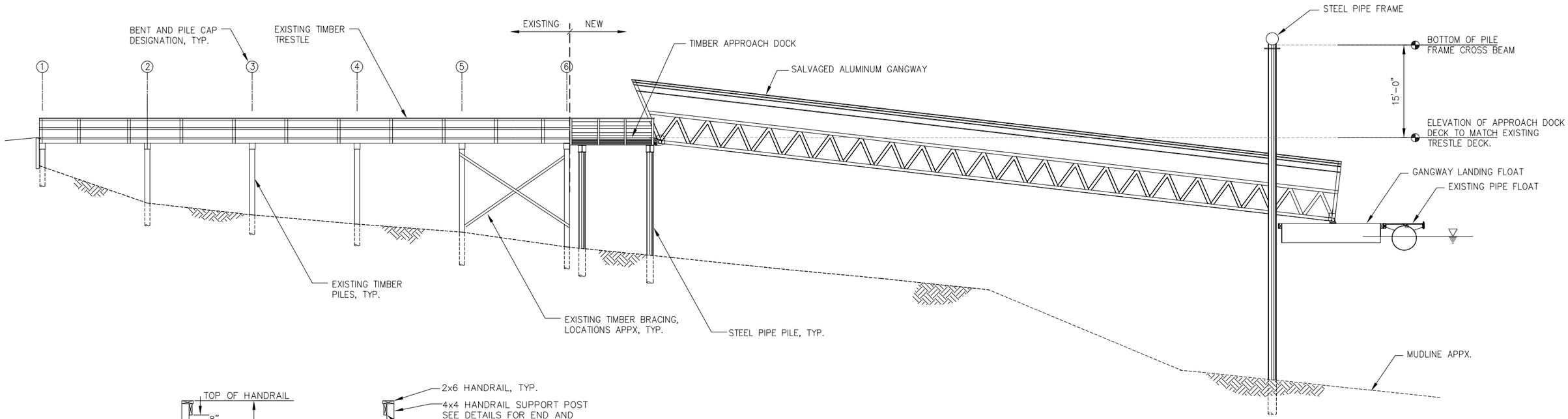

APPROACH DOCK AND GANGWAY ELEVATION

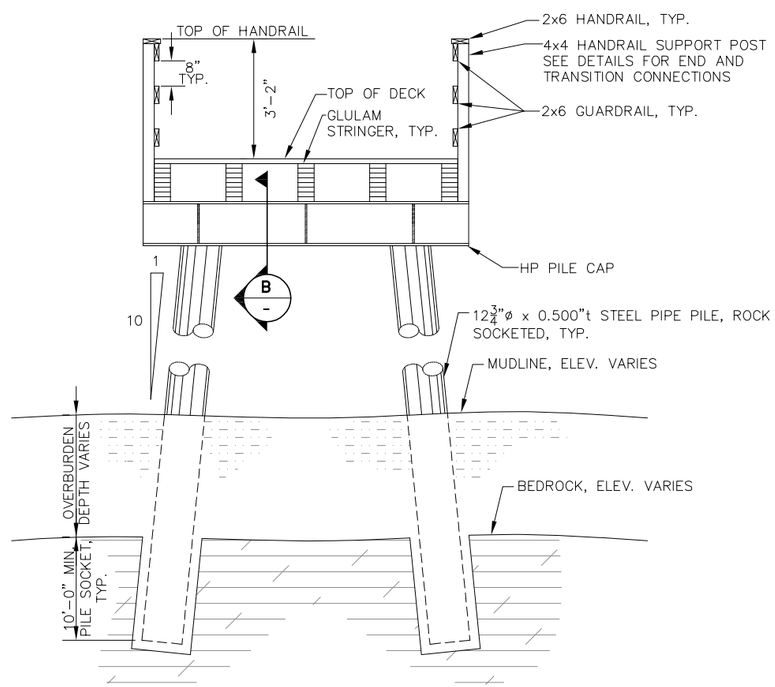

A
-
NEW APPROACH DOCK SECTION

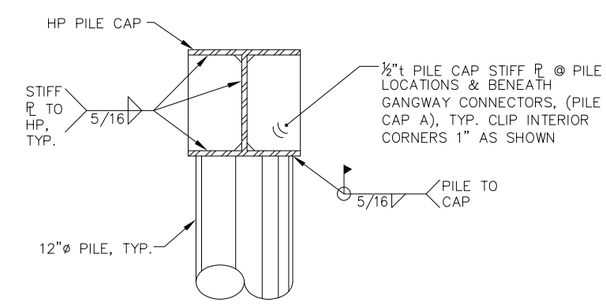

B
-
TYPICAL PILE CAP SECTION

65% DESIGN REVIEW SUBMITTAL

REVISIONS

REV.	DATE	DESCRIPTION	DWN.	CKD.	APP.

PND ENGINEERS, INC.
9360 Glacier Highway Suite 100
Juneau, Alaska 99801
Phone: 907-586-2093
Fax: 907-586-2099
www.pndengineers.com

DESIGN: BMI/MLB CHECKED: CRS
DRAWN: WRB APPROVED: CRS
SCALE: NOT TO SCALE
DATE: 12/7/12

HAINES BOROUGH
LETNIKOF COVE HARBOR REFURBISHMENT

SHEET TITLE:
APPROACH DOCK AND GANGWAY ELEVATION AND DETAILS

PND PROJECT NO.: 112091 DWG. FILE: 2.01_.DWG

B2.01
SHEET 6 OF 15

N:\11XXX\112091 Letnikof Cove Harbor Scoping\Drawings\FHD\2.01 Approach Dock.dwg, 12/7/2012 12:32:12 PM, 1:2

APPROACH DOCK PILE SCHEDULE

PILE #	PILE DESIGNATION	SUPPLIED PILE LENGTHS (FEET)	DIAMETER/ WALL THICKNESS
1	D1	--	--
2	D2	--	--
3	D3	--	--
4	D4	--	--

FLOAT PILE SCHEDULE

PILE #	PILE DESIGNATION	SUPPLIED PILE LENGTH (FEET)	DIAMETER/ WALL THICKNESS
1	G1	--	16" x 0.500"
2	G2	--	16" x 0.500"
3	F1	--	16" x 0.500"
4	F2	--	16" x 0.500"
5	F3	--	16" x 0.500"
6	F4	--	16" x 0.500"

NOTE:
1. SEE "OVERALL SITE PLAN" FOR LOCATION OF PILES WITHIN HARBOR.
2. ALL PILES SHALL BE ROCK SOCKETED. PILE LENGTH INDICATED ASSUMES 10 FT ROCK SOCKET.

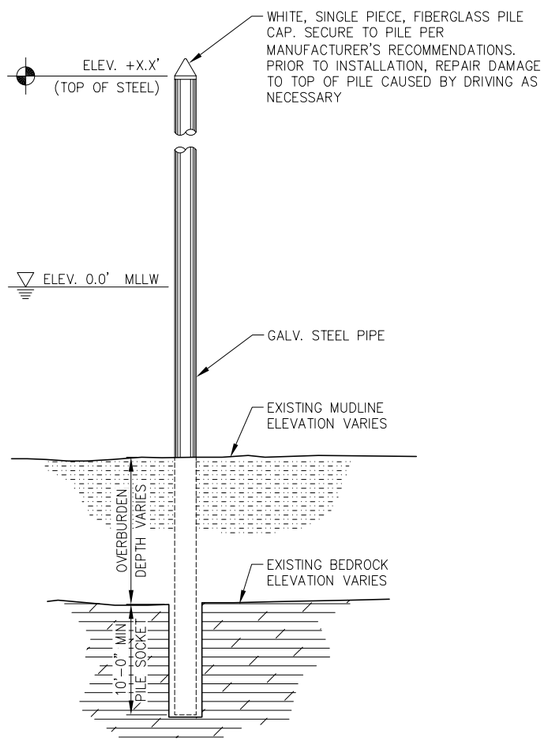

TYPICAL FLOAT PILE INSTALLATION PLAN

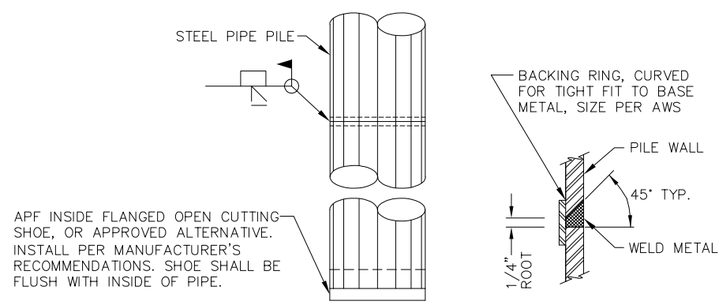

ELEVATION **TYPICAL SECTION**

TYPICAL PILE SPLICE WELD

TYPICAL FOR ALL SHOP & FIELD PIPE PILE SPLICES. CONTRACTOR MAY SUBMIT ALTERNATIVE PILE SPLICE DETAIL FOR ENGINEER APPROVAL.

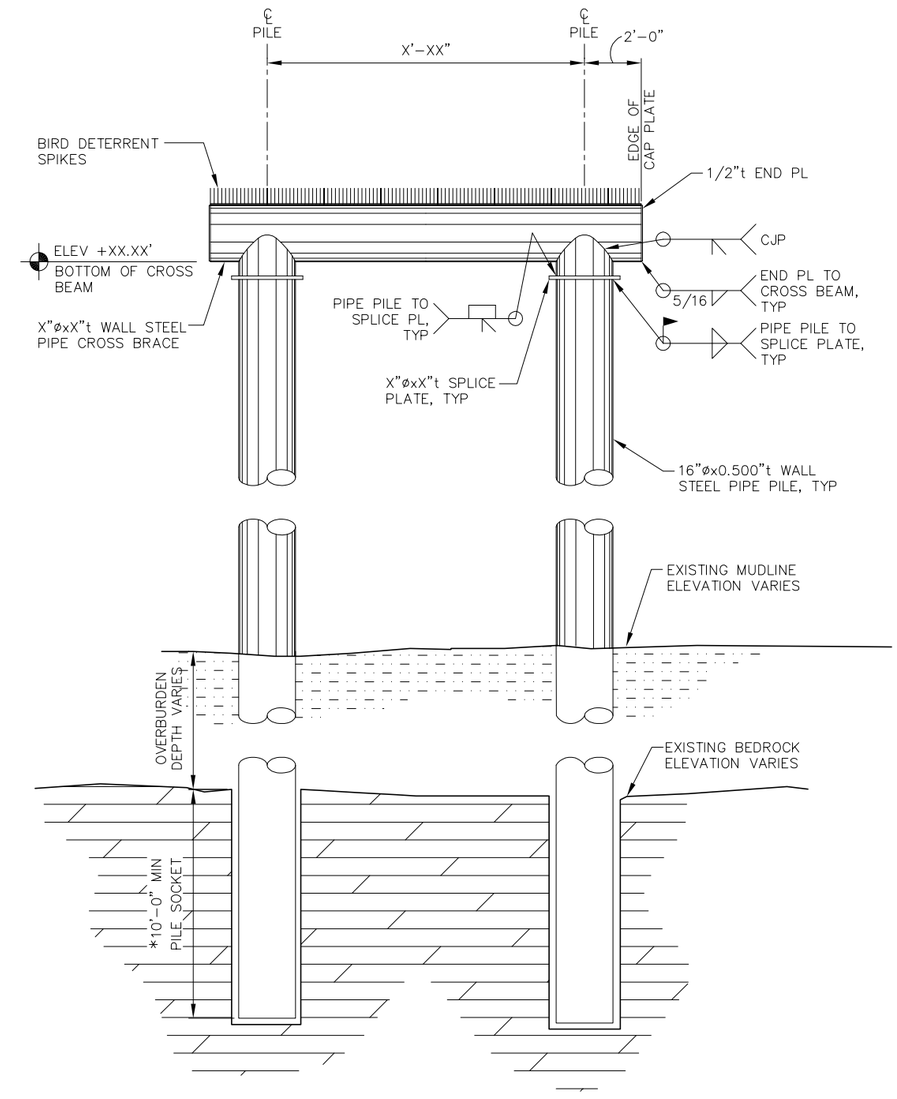

GANGWAY LANDING FLOAT
ROCK-SOCKET PILE INSTALLATION PLAN

65% DESIGN REVIEW SUBMITTAL

REVISIONS

REV.	DATE	DESCRIPTION	DWN.	CKD.	APP.

PND ENGINEERS, INC.
9360 Glacier Highway Suite 100
Juneau, Alaska 99801
Phone: 907-586-2093
Fax: 907-586-2099
www.pndengineers.com

DESIGN: BMI/MLB CHECKED: CRS
DRAWN: WRB APPROVED: CRS
SCALE: SCALE IN FEET 0 30 60 FT.
DATE: 12/7/12

HAINES BOROUGH
LETNIKOF COVE HARBOR REFURBISHMENT

SHEET TITLE:
PILE SCHEDULE AND DETAILS

PND PROJECT NO.: 112091 DWG. FILE: 4.03.DWG

B2.02
SHEET 7 OF 15

N:\11XXX\112091 Letnikof Cove Harbor Scoping\Drawings\PND\2.02 File Details.dwg, 12/7/2012 12:32:18 PM, 1:2

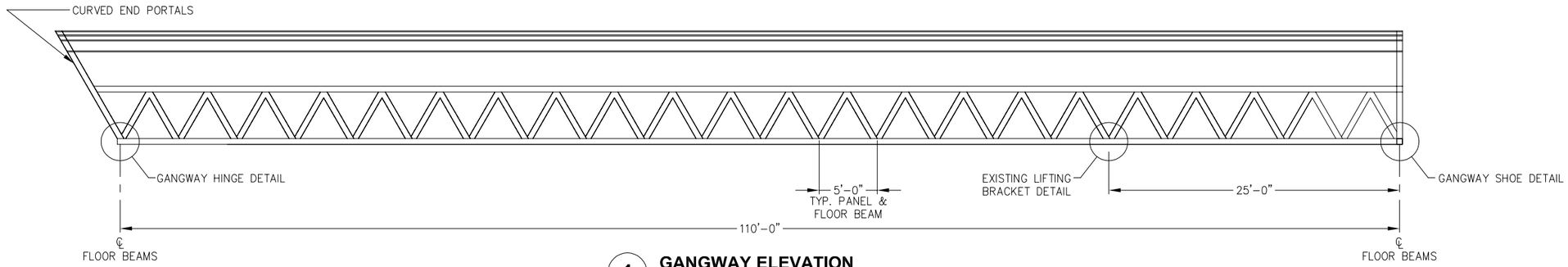

1 **GANGWAY ELEVATION**

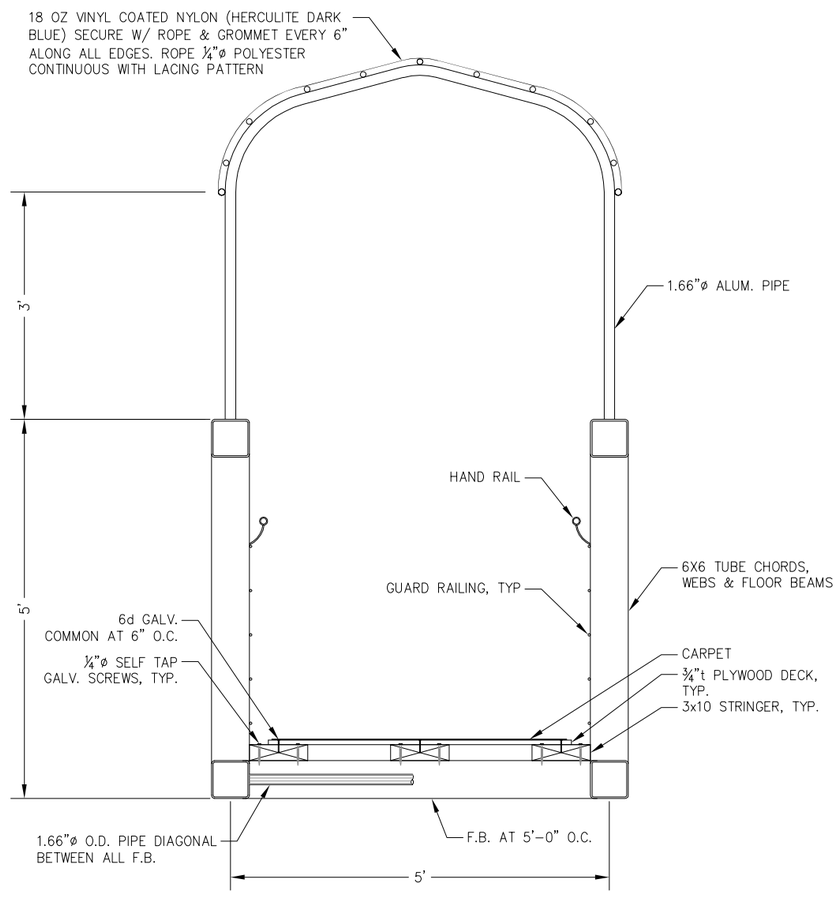

TYPICAL SECTION

65% DESIGN REVIEW SUBMITTAL

REVISIONS

REV.	DATE	DESCRIPTION	DWN.	CKD.	APP.

PND ENGINEERS, INC.
9360 Glacier Highway Suite 100
Juneau, Alaska 99801
Phone: 907-586-2093
Fax: 907-586-2099
www.pndengineers.com

DESIGN: BMI/MLB CHECKED: CRS
DRAWN: WRB/DD APPROVED: CRS
SCALE: AS SHOWN
DATE: 12/7/12

HAINES BOROUGH
LETNIKOF COVE HARBOR REFURBISHMENT

SHEET TITLE:
SALVAGED GANGWAY DETAILS

PND PROJECT NO.: 112091 DWG. FILE: 3.02_.DWG

B2.03
SHEET 8 OF 15

N:\11XXX\112091 Letnikof Cove Harbor Scoping\Drawings\PND\2.03 Salvaged Gangway Details.dwg, 12/7/2012 12:32:22 PM, 1:2

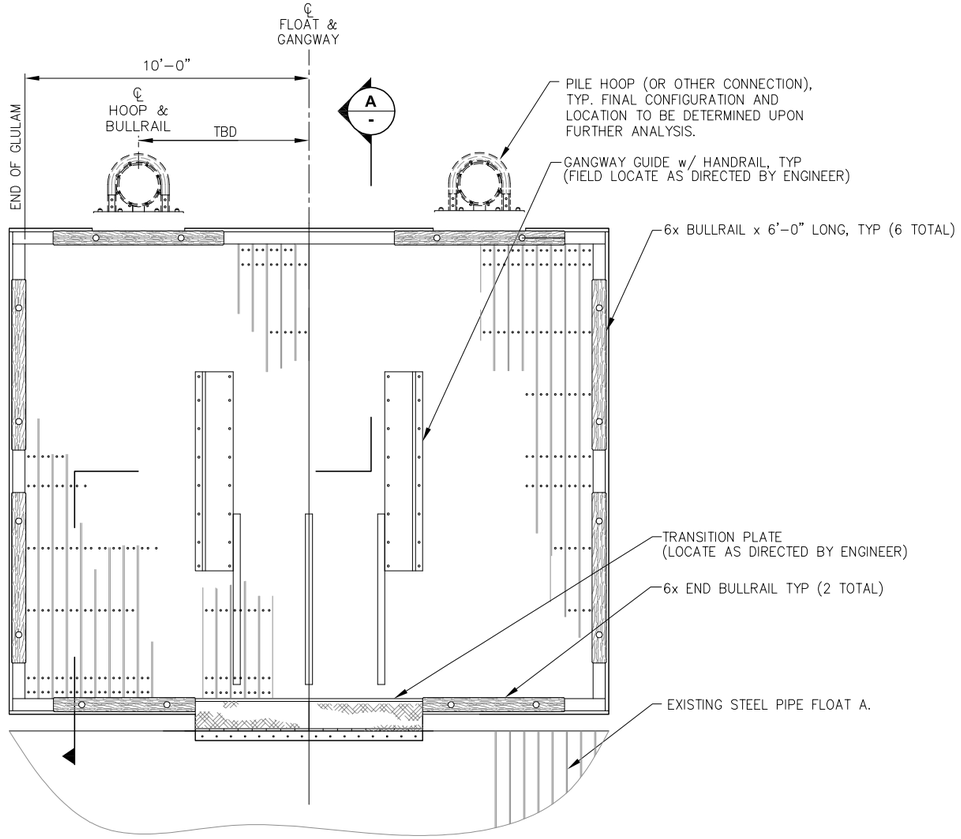

16FT x 20FT GANGWAY LANDING FLOAT - DECKING PLAN

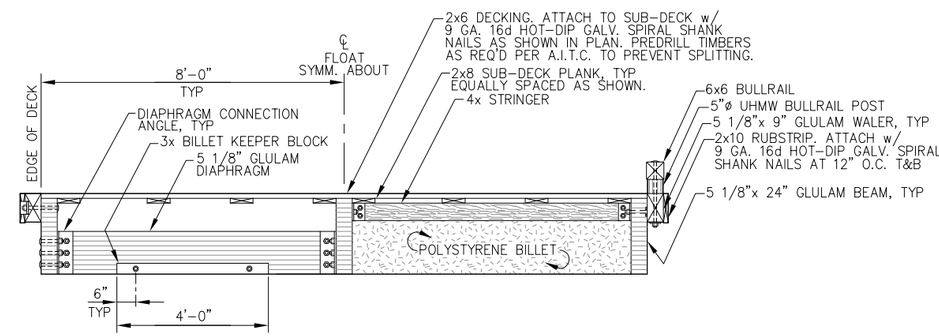

A - TYPICAL SECTION

65% DESIGN REVIEW SUBMITTAL

REVISIONS

REV.	DATE	DESCRIPTION	DWN.	CKD.	APP.

PND ENGINEERS, INC.
9360 Glacier Highway Suite 100
Juneau, Alaska 99801
Phone: 907-586-2093
Fax: 907-586-2099
www.pndengineers.com

DESIGN: BMI/MLB CHECKED: CRS
DRAWN: WRB APPROVED: CRS
SCALE:
DATE: 12/7/12

HAINES BOROUGH
LETNIKOF COVE HARBOR REFURBISHMENT

SHEET TITLE:
GANGWAY LANDING FLOAT FRAMING AND DECKING PLAN

PND PROJECT NO.: 112091 DWG. FILE: 4.07_4.08_.DWG

B3.01
SHEET 9 OF 15

N:\11XXX\112091 Letnikof Cove Harbor Scoping\Drawings\FHD\3.01 Gangway Landing Float.dwg, 12/7/2012 12:32:28 PM, 1:2

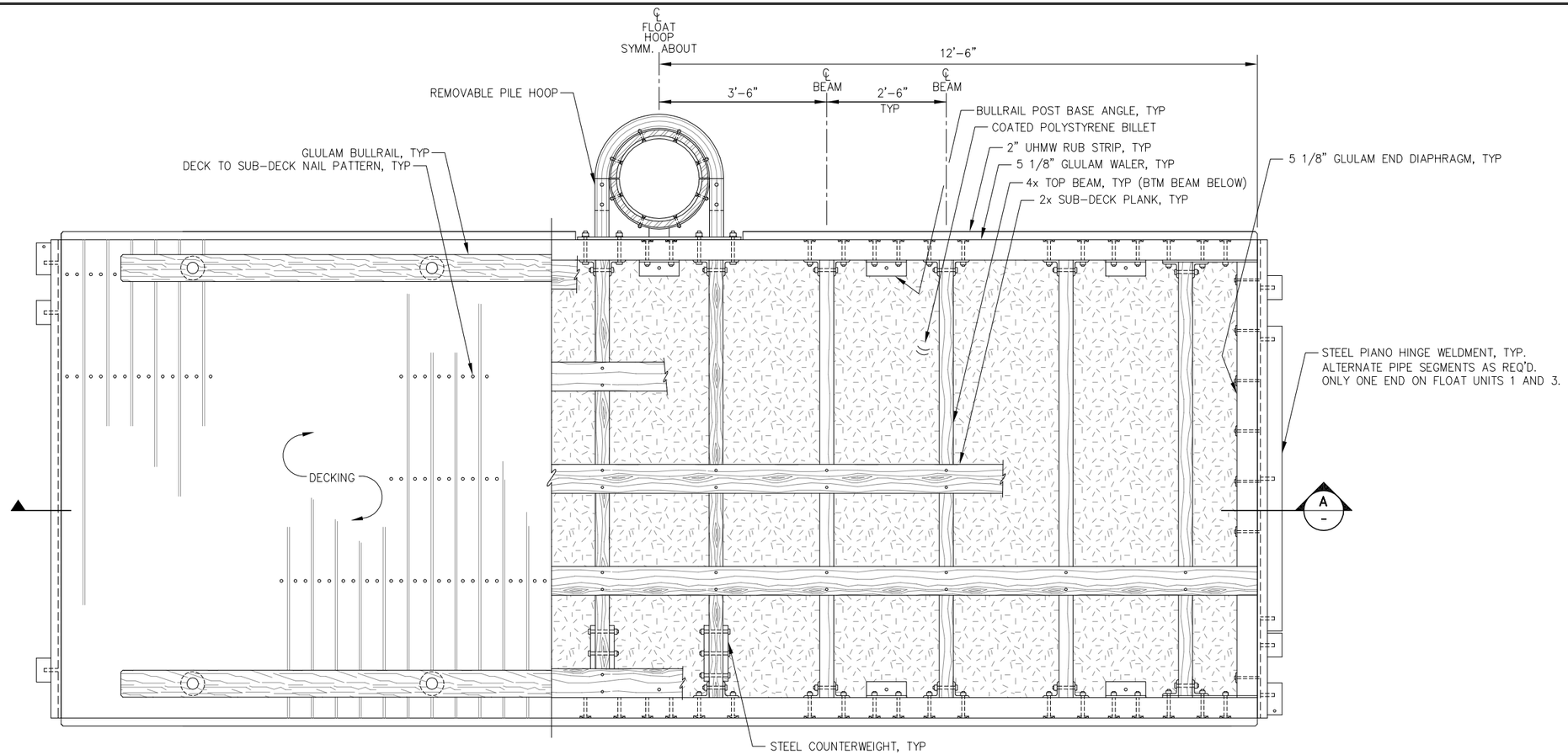

TYPICAL FLOAT UNIT - PLAN

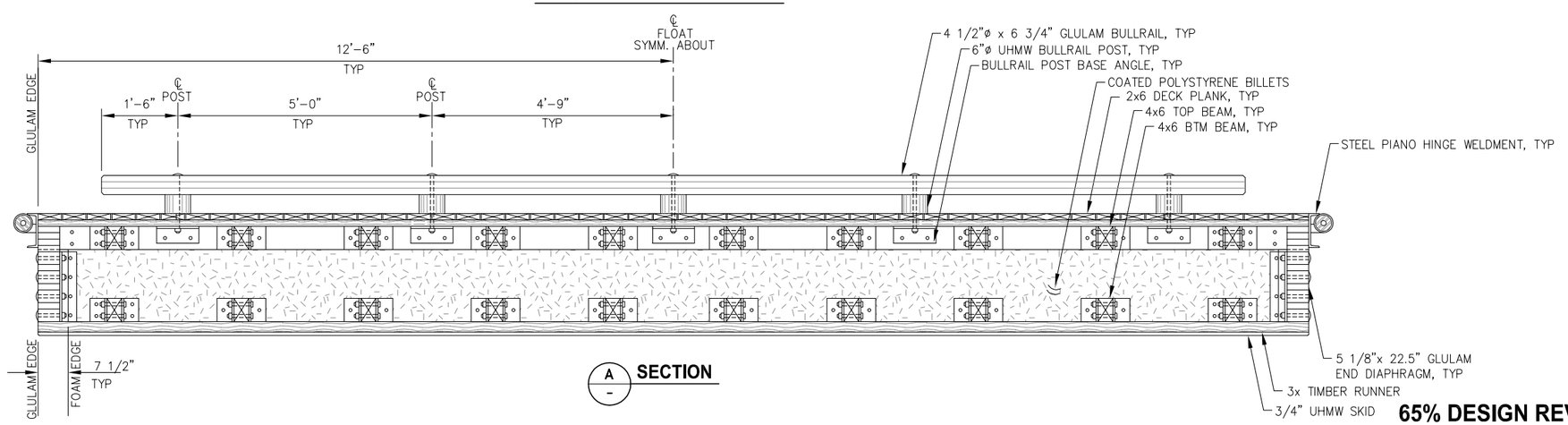

A - **SECTION**

65% DESIGN REVIEW SUBMITTAL

REVISIONS

REV.	DATE	DESCRIPTION	DWN.	CKD.	APP.

PND ENGINEERS, INC.
9360 Glacier Highway Suite 100
Juneau, Alaska 99801
Phone: 907-586-2093
Fax: 907-586-2099
www.pndengineers.com

DESIGN: BMI/MLB CHECKED: CRS
DRAWN: BMI APPROVED: CRS
SCALE: NTS
DATE: 12/7/12

HAINES BOROUGH
LETNIKOF COVE HARBOR
REFURBISHMENT

SHEET TITLE:
SEGMENTAL TIMBER FLOAT DETAILS

PND PROJECT NO.: 112091 DWG. FILE: 2.02.DWG

B3.02
SHEET 10 OF 15

N:\11XXX\112091 Letnikof Cove Harbor Scoping\Drawings\PND 3.02 Timber Float.dwg, 12/7/2012 12:32:32 PM, 1:2

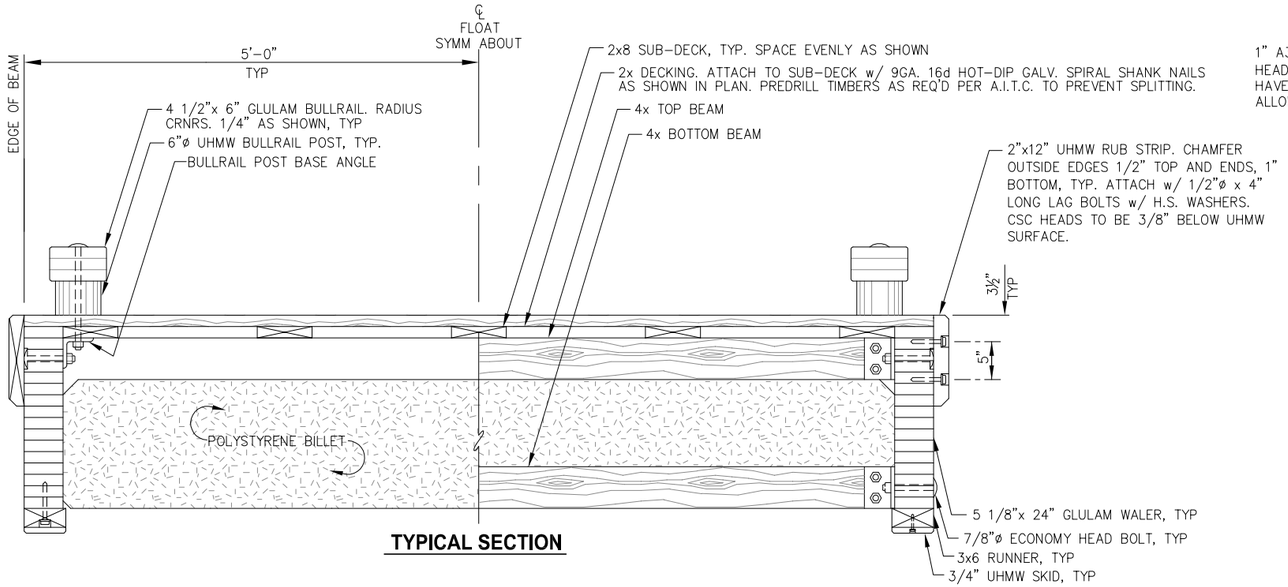

TYPICAL SECTION

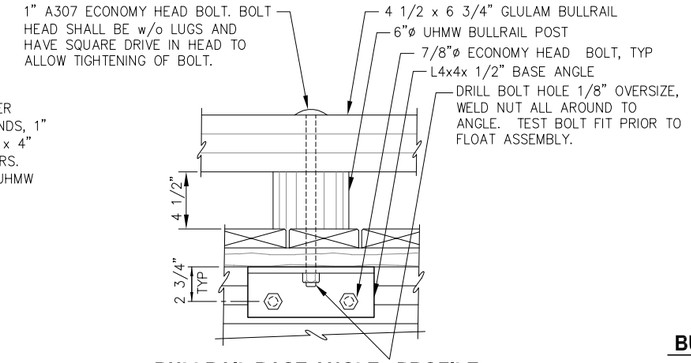

BULLRAIL BASE ANGLE - PROFILE

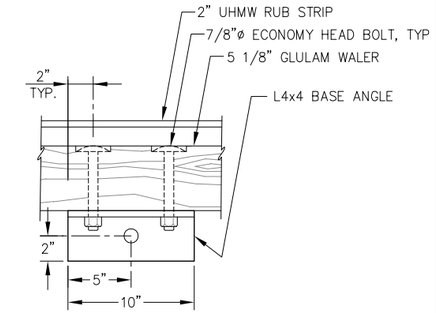

BULLRAIL BASE ANGLE - PLAN

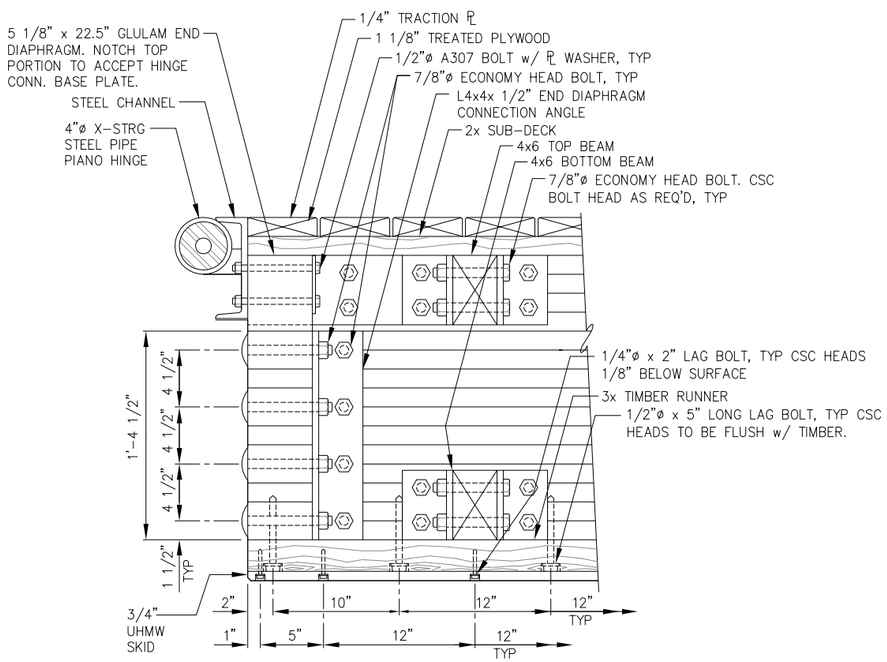

END DIAPHRAGM/FLOAT CONNECTION PROFILE

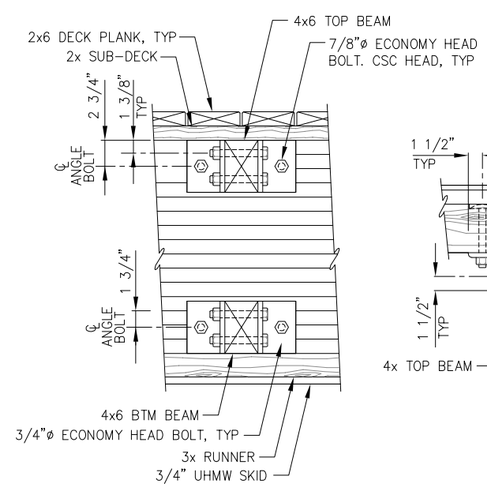

PROFILE

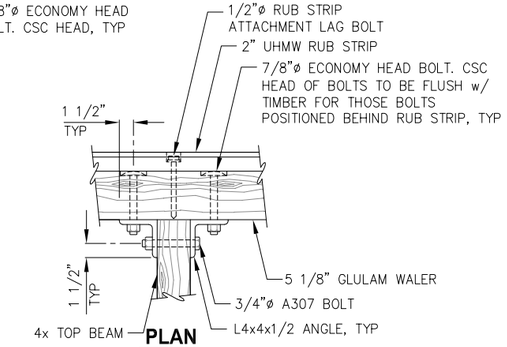

PLAN

65% DESIGN REVIEW SUBMITTAL

REVISIONS

REV.	DATE	DESCRIPTION	DWN.	CKD.	APP.

PND ENGINEERS, INC.
9360 Glacier Highway Suite 100
Juneau, Alaska 99801
Phone: 907-586-2093
Fax: 907-586-2099
www.pndengineers.com

DESIGN: BMI/MLB CHECKED: CRS
DRAWN: BMI APPROVED: CRS
SCALE: NTS
DATE: 12/7/12

HAINES BOROUGH
LETNIKOF COVE HARBOR REFURBISHMENT

SHEET TITLE:
SEGMENTAL TIMBER FLOAT DETAILS

PND PROJECT NO.: 112091 DWG. FILE: 2.02.DWG

B3.03
SHEET 11 OF 15

N:\11XXX\112091 Letnikof Cove Harbor Scoping\Drawings\FMD 3.02 Timber Float.dwg, 12/7/2012 12:32:36 PM, 1:2

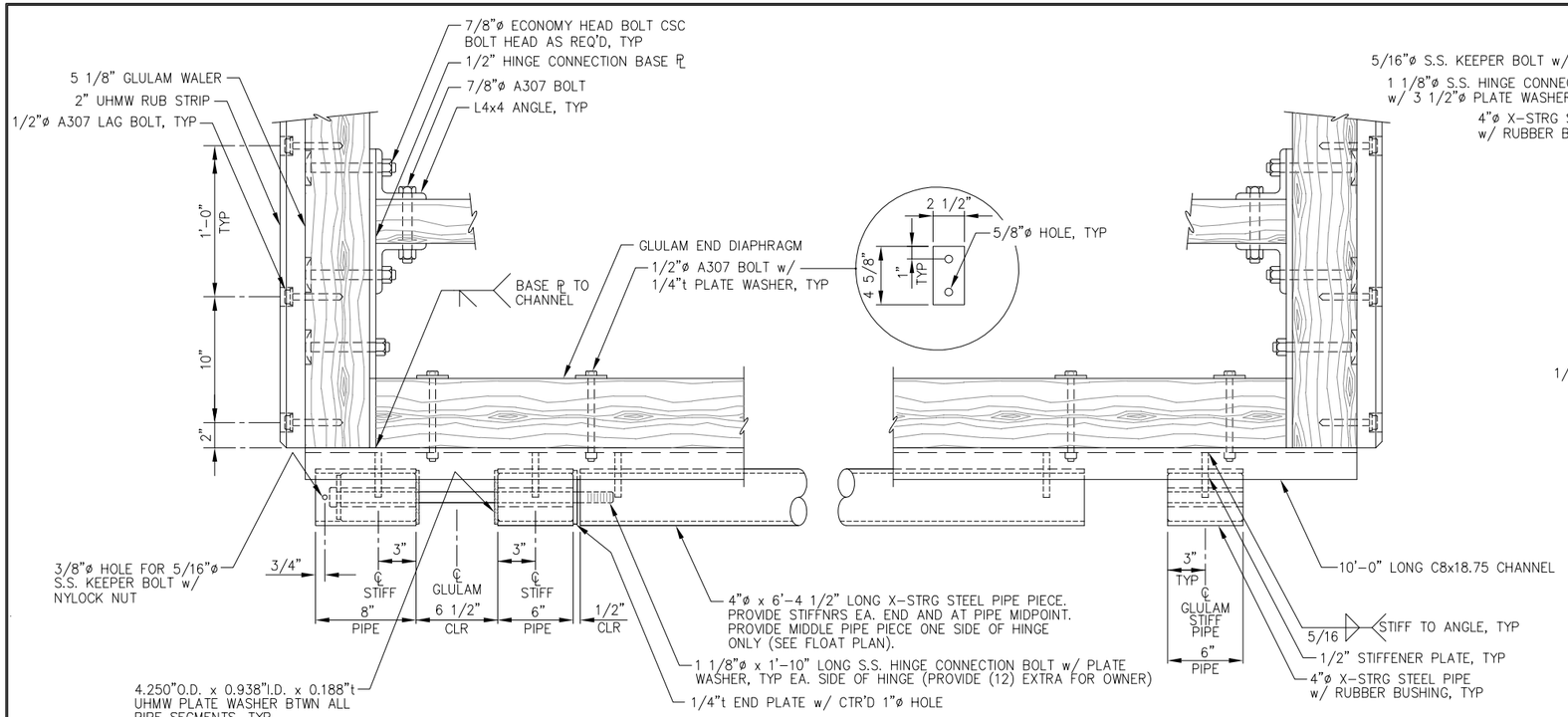

TYPICAL FLOAT HINGE CONNECTION - PLAN

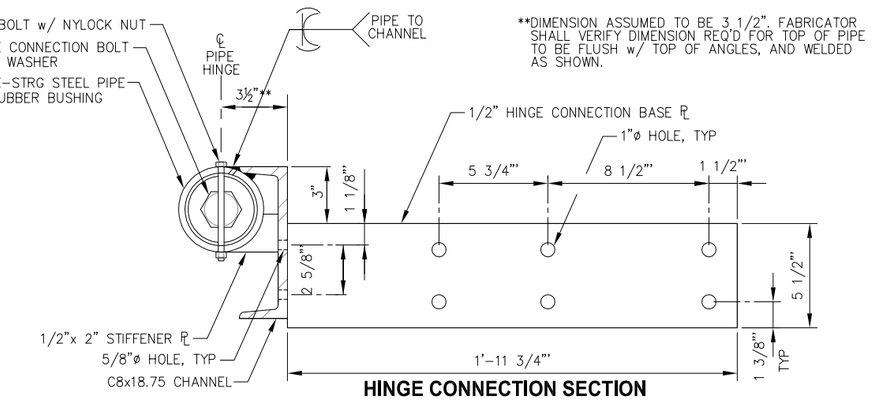

HINGE CONNECTION SECTION

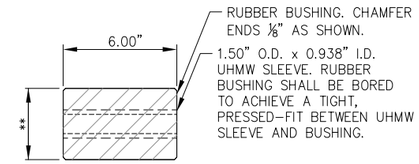

TYPICAL PIANO HINGE RUBBER BUSHING

**SEE SPECIFICATIONS FOR DIAMETER REQUIREMENTS

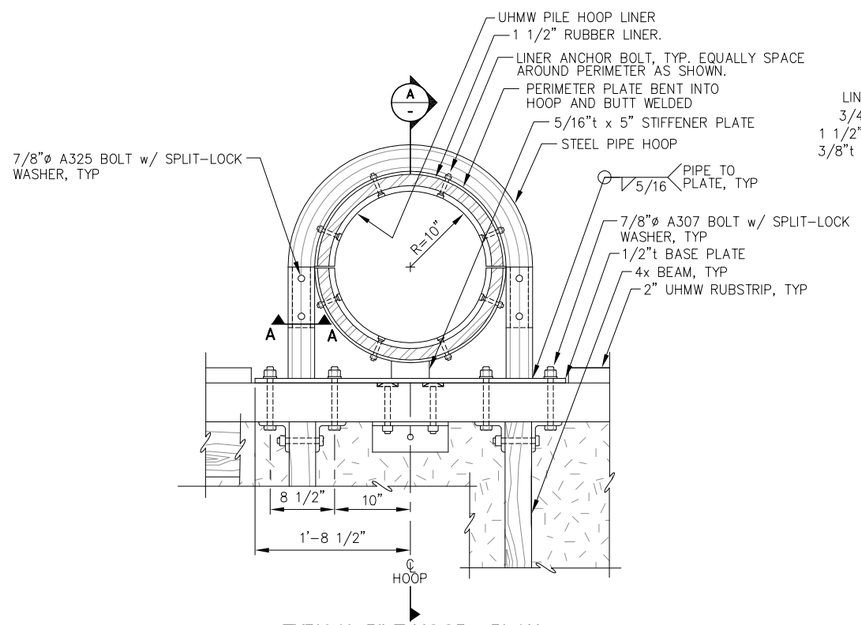

TYPICAL PILE HOOP - PLAN

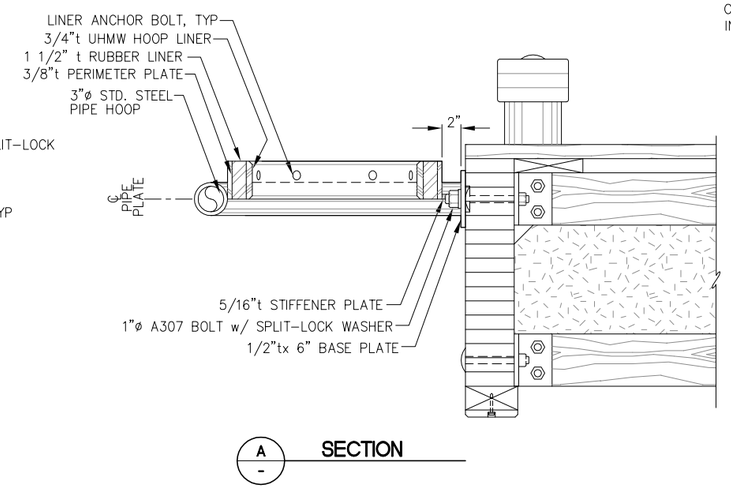

A SECTION

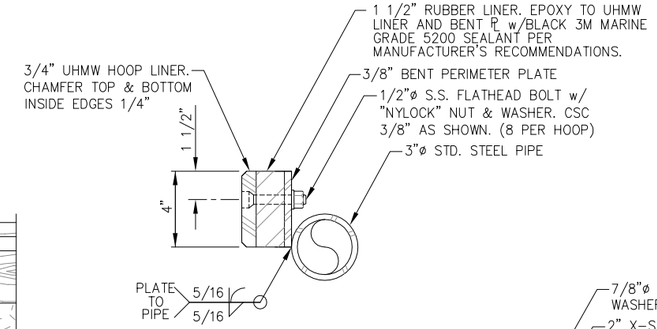

TYPICAL HOOP SECTION

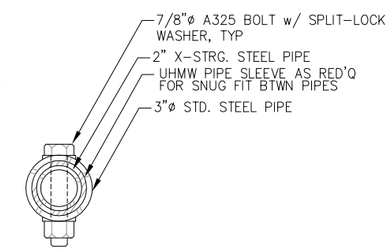

REMOVABLE PIPE SECTION - A-A

65% DESIGN REVIEW SUBMITTAL

REVISIONS

REV.	DATE	DESCRIPTION	DWN.	CKD.	APP.

PND ENGINEERS, INC.
9360 Glacier Highway Suite 100
Juneau, Alaska 99801
Phone: 907-586-2093
Fax: 907-586-2099
www.pndengineers.com

DESIGN: BMI/MLB CHECKED: CRS
DRAWN: BMI APPROVED: CRS
SCALE: NTS
DATE: 12/7/12

HAINES BOROUGH
LETNIKOF COVE HARBOR REFURBISHMENT

SHEET TITLE: **SEGMENTAL TIMBER FLOAT DETAILS**

PND PROJECT NO.: 112091 DWG. FILE: 2.02.DWG

B3.04
SHEET 12 OF 15

N:\11XXX\112091 Letnikof Cove Harbor Scoping\Drawings\FMD 3.02 Timber Float.dwg, 12/7/2012 12:32:41 PM, 1:2

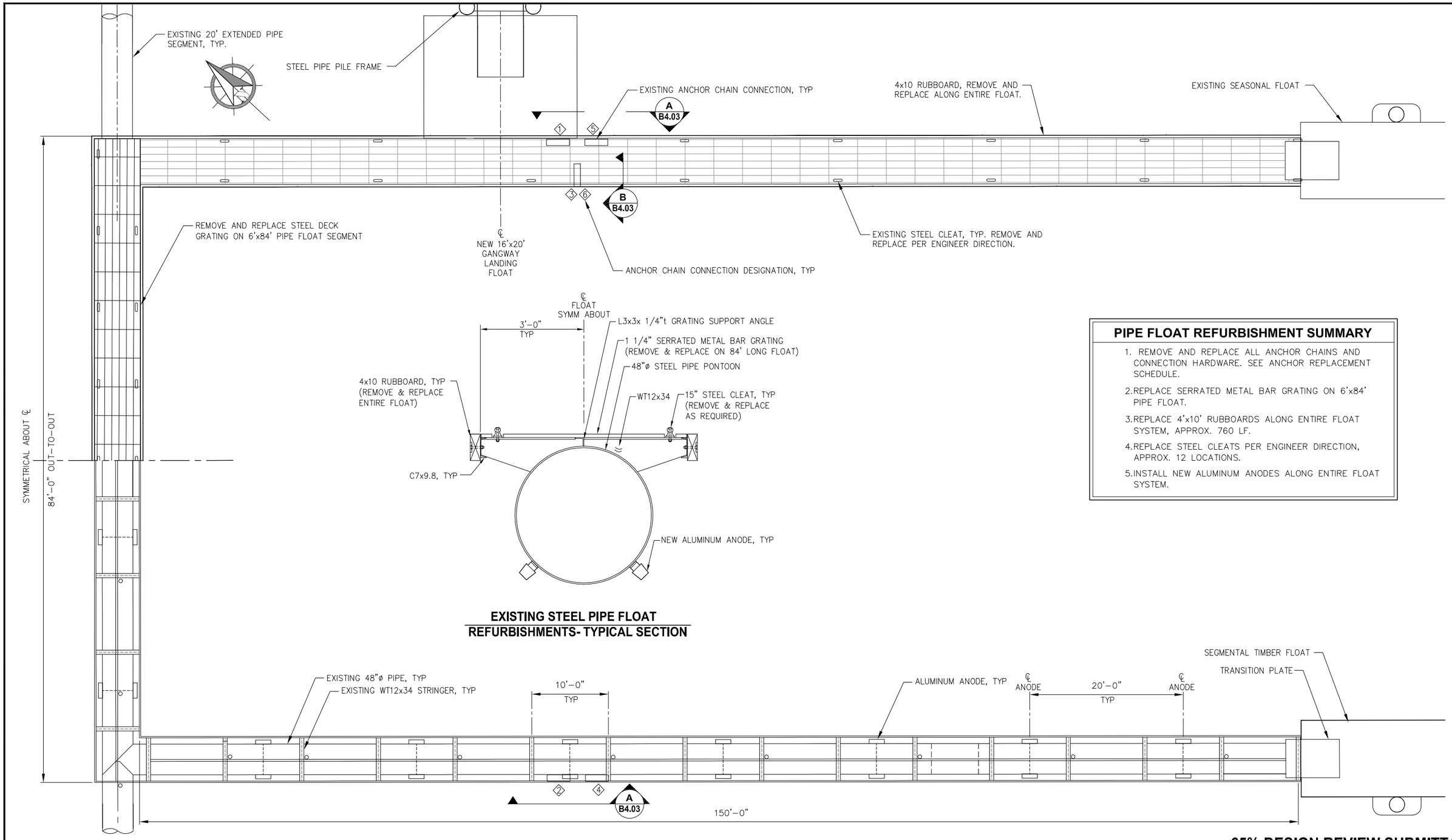

PIPE FLOAT REFURBISHMENT SUMMARY

1. REMOVE AND REPLACE ALL ANCHOR CHAINS AND CONNECTION HARDWARE. SEE ANCHOR REPLACEMENT SCHEDULE.
2. REPLACE SERRATED METAL BAR GRATING ON 6'x84' PIPE FLOAT.
3. REPLACE 4'x10' RUBBOARDS ALONG ENTIRE FLOAT SYSTEM, APPROX. 760 LF.
4. REPLACE STEEL CLEATS PER ENGINEER DIRECTION, APPROX. 12 LOCATIONS.
5. INSTALL NEW ALUMINUM ANODES ALONG ENTIRE FLOAT SYSTEM.

65% DESIGN REVIEW SUBMITTAL

REVISIONS

REV.	DATE	DESCRIPTION	DWN.	CKD.	APP.

PND ENGINEERS, INC.
9360 Glacier Highway Suite 100
Juneau, Alaska 99801
Phone: 907-586-2093
Fax: 907-586-2099
www.pndengineers.com

DESIGN: BMI/MLB CHECKED: CRS
DRAWN: WRB APPROVED: CRS
SCALE: SCALE IN FEET 0 30 60 FT.
DATE: 12/7/12

HAINES BOROUGH
LETNIKOF COVE HARBOR REFURBISHMENT

SHEET TITLE: STEEL PIPE FLOAT REFURBISHMENT PLAN

PND PROJECT NO.: 112091 DWG. FILE: 4.01.DWG

B4.01
SHEET 13 OF 15

N:\11XXX\112091 Letnikof Cove Harbor Scoping\Drawings\PND\4.01_4.02 Steel Pipe Float.dwg, 12/7/2012 12:32:43 PM, 1:2

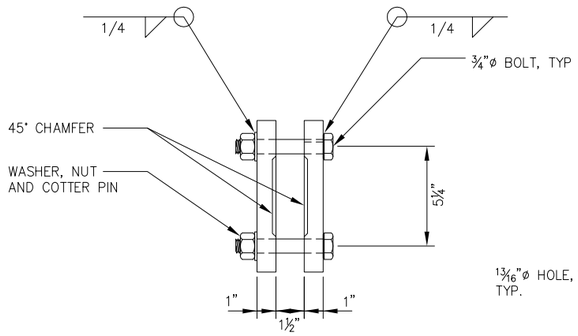

PLAN

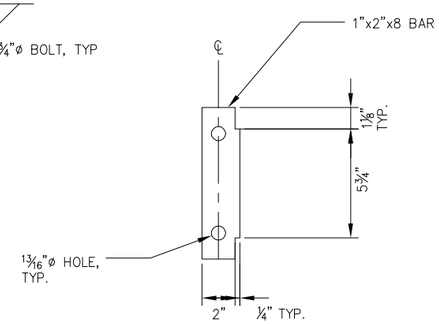

SIDE ELEVATION

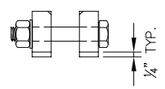

SECTION

CHAIN KEEPER DETAILS

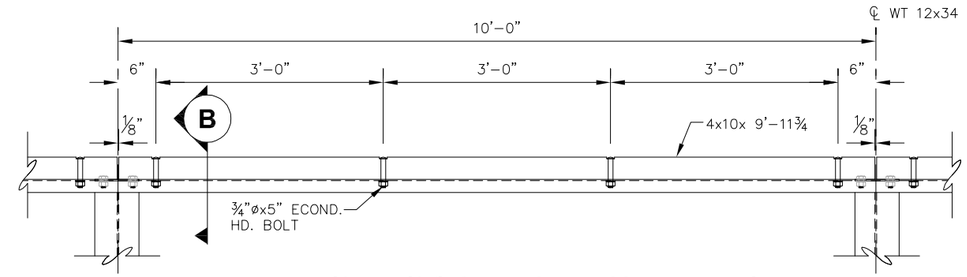

TYPICAL EXISTING RUBBOARD ASSEMBLY PLAN

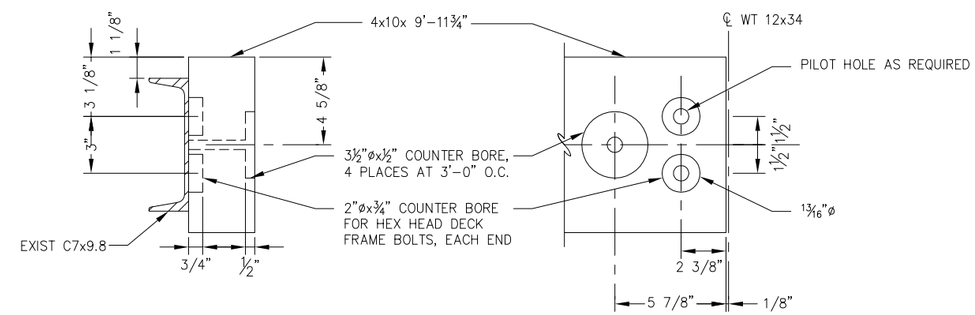

B **SECTION**

END DETAIL

WALE DETAILS

NOTE: ALL DETAILS AND DIMENSIONS INDICATED ARE DERIVED FROM AKDOT AND PF DESIGN DRAWINGS. FIELD VERIFY ALL DIMENSIONS PRIOR TO MANUFACTURE

65% DESIGN REVIEW SUBMITTAL

REVISIONS

REV.	DATE	DESCRIPTION	DWN.	CKD.	APP.

PND ENGINEERS, INC.
9360 Glacier Highway Suite 100
Juneau, Alaska 99801
Phone: 907-586-2093
Fax: 907-586-2099
www.pndengineers.com

DESIGN: BMI/MLB CHECKED: CRS
DRAWN: DD APPROVED: CRS
SCALE: SCALE IN FEET 0 30 60 FT.
DATE: 12/7/12

HAINES BOROUGH
LETNIKOF COVE HARBOR
REFURBISHMENT

SHEET TITLE:
STEEL PIPE FLOAT DETAILS

PND PROJECT NO.: 112091 DWG. FILE: 4.01_4.02_.DWG

B4.02
SHEET 14 OF 15

H:\11XXX\112091 Letnikof Cove Harbor Scoping\Drawings\PND\4.01_4.02 Steel Pipe Float.dwg, 12/7/2012 12:32:51 PM, 1:2

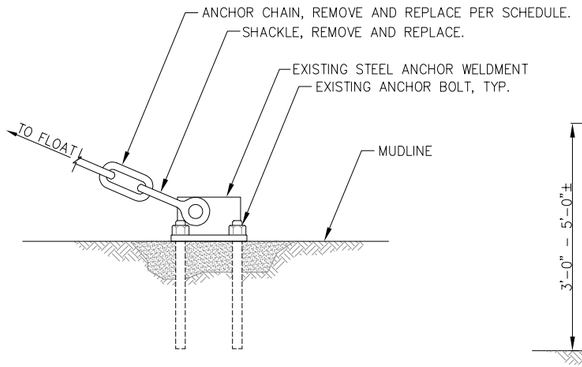

CHAIN REPLACEMENT - ROCK ANCHOR
ELEVATION

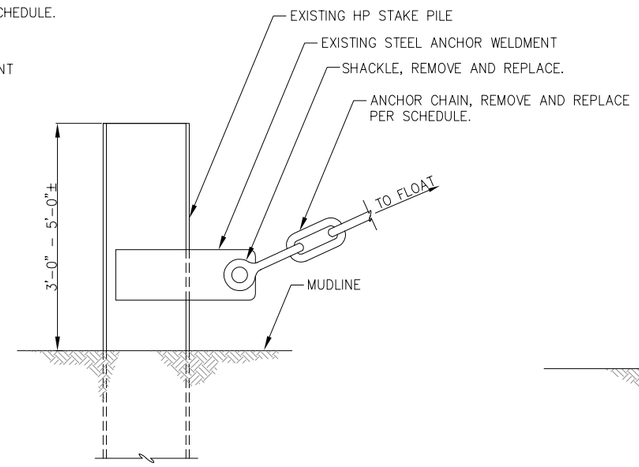

CHAIN REPLACEMENT - STAKE PILE
ELEVATION

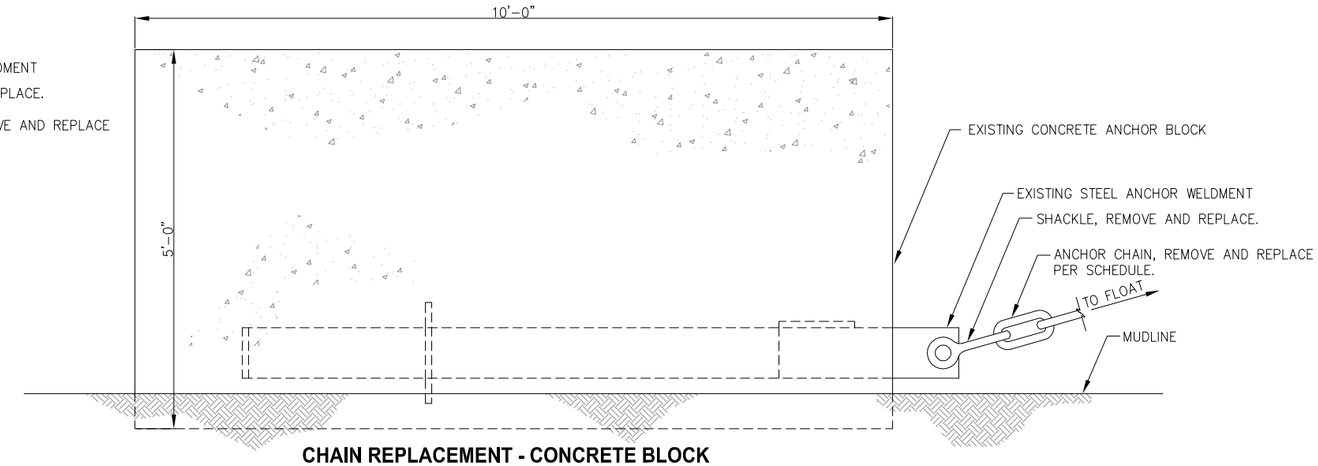

CHAIN REPLACEMENT - CONCRETE BLOCK
ELEVATION

NOTE: REMOVE ANY OVERBURDEN THAT MAY EXIST AROUND ANCHORS AS REQ'D TO ACCESS WELDMENTS AND REPLACE CHAINS AND HARDWARE.

ANCHOR CHAIN REPLACEMENT SCHEDULE

CHAIN DESIGN.	CHAIN SIZE	STRENGTH (PROOF)	EST. CHAIN LENGTH (ft)	ANCHOR TYPE
1	1 1/4"	130,000	255	CB/SP
2	1 1/4"	130,000	355	CB/SP
3	1 1/8"	106,000	396	SP
4	1 1/4"	130,000	296	SP
5	1 1/4"	130,000	221	SP
6	1 1/8"	106,000	125	RA

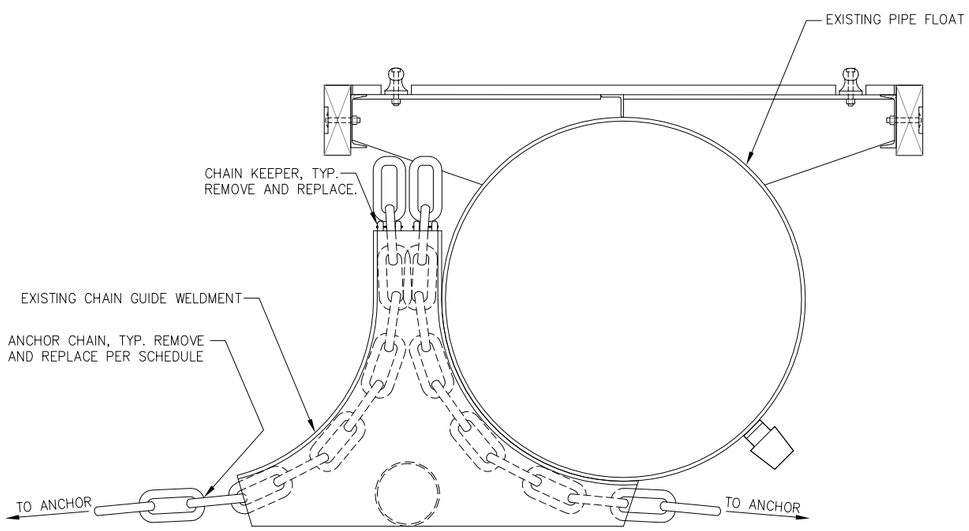

CHAIN REPLACEMENT - PIPE FLOAT ANCHORS 3 & 6
SECTION

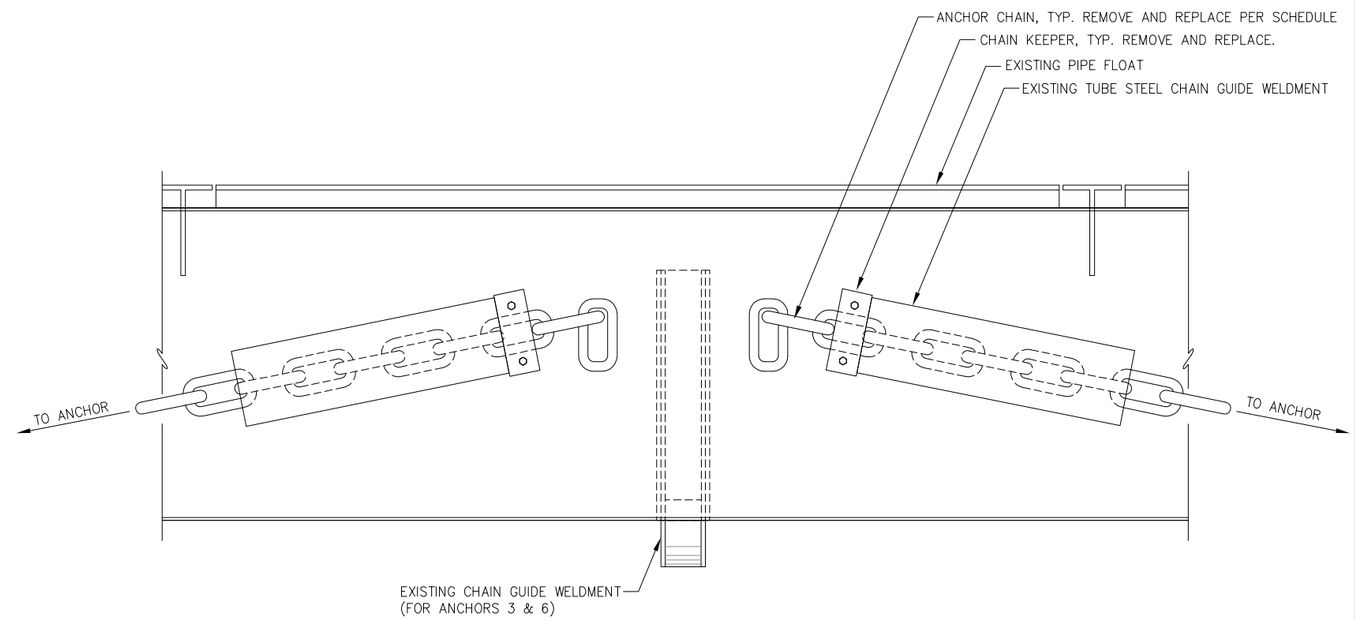

CHAIN REPLACEMENT - PIPE FLOAT ANCHORS 1, 2, 4, & 5
ELEVATION

65% DESIGN REVIEW SUBMITTAL

REVISIONS

REV.	DATE	DESCRIPTION	DWN.	CKD.	APP.

PND ENGINEERS, INC.
9360 Glacier Highway Suite 100
Juneau, Alaska 99801
Phone: 907-586-2093
Fax: 907-586-2099
www.pndengineers.com

DESIGN: BMI/MLB CHECKED: CRS
DRAWN: BMI APPROVED: CRS
SCALE: NTS
DATE: 12/7/12

HAINES BOROUGH
LETNIKOF COVE HARBOR
REFURBISHMENT

SHEET TITLE:
ANCHOR CHAIN
REPLACEMENT DETAILS

PND PROJECT NO.: 112091 DWG. FILE: 4.03.DWG

B4.03
SHEET 15 OF 15

H:\11XXX\112091 Letnikof Cove Harbor Scoping\Drawings\PND\4.03 Anchor-Keeper Refurbish.dwg, 12/7/2012 12:32:58 PM, 1:2