HAINES BOROUGH
SOUTH PORTAGE COVE HARBOR EXPANSION

LOCATION MAP

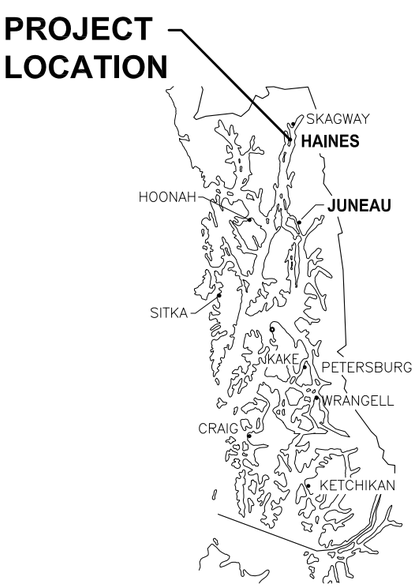

SOUTHEAST ALASKA

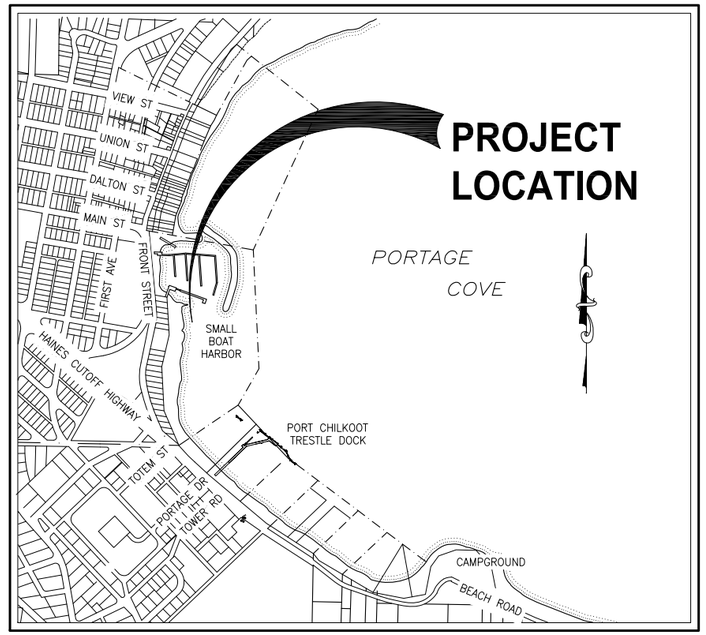

MAP MODIFIED FROM: HAINES BOROUGH

VICINITY MAP

SCALE (FEET)
0 750 1500

DRAWING INDEX

SHEET NO.	DWG. NO.	TITLE
		GENERAL
1 OF 23	1.01	COVER SHEET, VICINITY MAPS AND DRAWING INDEX
2 OF 23	1.02	GENERAL NOTES, LEGEND AND ABBREVIATIONS
3 OF 23	1.03	EXISTING CONDITIONS & SURVEY CONTROL
4 OF 23	1.04	GENERAL SITE PLAN
5 OF 23	1.05	DEMOLITION PLAN
		WASTEWATER OUTFALL
6 OF 23	2.01	WASTEWATER OUTFALL PLAN & PROFILE
7 OF 23	2.02	WASTEWATER OUTFALL DETAILS
		DREDGING
8 OF 23	3.01	DREDGING PLAN
9 OF 23	3.02	DREDGING SECTIONS
10 OF 23	3.03	DREDGING OFFSHORE DISPOSAL PLAN
		UPLANDS
11 OF 23	4.01	UPLAND SITE PLAN & PROFILE
12 OF 23	4.02	STORM DRAIN DETAILS
13 OF 23	4.03	STORM DRAIN DETAILS
		STRUCTURAL
14 OF 23	5.01	WAVE BARRIER SITE PLAN
15 OF 23	5.02	WAVE BARRIER PARTIAL PLAN
16 OF 23	5.03	PARTIAL ELEVATION
17 OF 23	5.04	TYPICAL SECTIONS
18 OF 23	5.05	PILE SCHEDULE
19 OF 23	5.06	PILE SCHEDULE
20 OF 23	5.07	BEARING PILES AND WALERS
21 OF 23	5.08	BEARING PILE DETAILS
22 OF 23	5.09	BOX CAPS DETAILS
23 OF 23	5.10	FENDER AND MARINE SIGNAL LIGHT

PND ENGINEERS, INC. (PND) IS NOT RESPONSIBLE FOR SAFETY PROGRAMS, METHODS OR PROCEDURES OF OPERATION, OR THE CONSTRUCTION OF THE DESIGN SHOWN ON THESE DRAWINGS. DRAWINGS ARE FOR THE USE OF THIS PROJECT ONLY AND ARE NOT INTENDED FOR REUSE WITHOUT WRITTEN APPROVAL FROM PND. DRAWINGS ARE ALSO NOT TO BE USED IN ANY MANNER THAT WOULD CONSTITUTE A DETRIMENT DIRECTLY OR INDIRECTLY TO PND.

TIDAL DATA

HIGHEST OBSERVED WATER LEVEL (APPROX.) = 26.1 FEET
EXTREME HIGH WATER = 22.5 FEET
HIGH TIDE LINE = 21.2 FEET
MEAN HIGH WATER = 15.8 FEET
MEAN LOWER WATER = 1.6 FEET
MEAN LOWER LOW WATER = 0 FEET
MEAN LOWER LOW WATER (MLLW)
LOWEST OBSERVED WATER LEVEL (APPROX.) = −6.7 FEET

FROM: NOAA NOS/CO-OPS STATION ID:9452400 SKAGWAY, ALASKA

PROJECT SCHEDULE

DESCRIPTION	SCHEDULE
1. SUBSTANTIAL COMPLETION	MAY 31, 2017
2. FINAL COMPLETION OF ALL WORK UNDER THIS CONTRACT.	JUNE 30, 2017

65% DESIGN REVIEW SUBMITTAL

REVISIONS

REV.	DATE	DESCRIPTION	DWN.	CKD.	APP.

PND ENGINEERS, INC.
9360 Glacier Highway, Ste. 100
Juneau, Alaska 99801
Phone: 907-586-2093
Fax: 907-586-2099
www.pndengineers.com

DESIGN: TCB CHECKED: CRS
DRAWN: PJD APPROVED:
SCALE: AS SHOWN
DATE: 3/13/15

HAINES BOROUGH
SOUTH PORTAGE COVE
HARBOR EXPANSION

SHEET TITLE:
COVER SHEET, VICINITY MAPS AND DRAWING INDEX

PND PROJECT NO.: 102029

1.01
SHEET 1 OF 23

GENERAL NOTES

1. **EROSION AND POLLUTION CONTROL PLANS**

   THE CONTRACTOR SHALL DEVELOP AND SUBMIT FOR ENGINEER AND AGENCY REVIEW AND APPROVAL A STORM WATER POLLUTION PREVENTION PLAN (SWPPP). THIS PLAN SHALL INCLUDE AN EROSION AND SEDIMENT CONTROL PLAN BASED UPON THE CONTRACTOR'S SCHEDULING, EQUIPMENT AND WORK. TO THE GREATEST EXTENT POSSIBLE FOLLOW THE ALASKA DEPARTMENT OF TRANSPORTATION AND PUBLIC FACILITIES (ADOT/PF) ALASKA STORM WATER POLLUTION PREVENTION PLAN GUIDE (ASWPPPG). THE PLAN SHALL CONSIDER FIRST PREVENTING EROSION, THEN MINIMIZING AND TRAPPING SEDIMENT PRIOR TO ITS ENTERING THE WATERWAYS. THE PLAN MUST ADDRESS THE SITE-SPECIFIC CONTROLS AND MANAGEMENT FOR THE CONSTRUCTION SITE AS WELL AS ALL MATERIAL SITES, WASTE DISPOSAL SITES AND AFFECTED AREAS. THE PLAN MUST INCORPORATE ALL THE REQUIREMENTS OF THE PROJECT PERMITS. BEST MANAGEMENT PRACTICES AS LISTED IN THE ASWPPPG SHALL BE USED.

   THE CONTRACTOR SHALL PREPARE A HAZARDOUS MATERIAL CONTROL PLAN (HMCP) FOR THE HANDLING, STORAGE, CLEAN-UP AND DISPOSAL OF PETROLEUM AND OTHER HAZARDOUS SUBSTANCES. THE CONTRACTOR SHALL LIST AND GIVE LOCATIONS OF ALL HAZARDOUS MATERIALS, INCLUDING FIELD OFFICE MATERIALS, TO BE USED AND STORED ON-SITE AND THEIR ESTIMATED QUANTITIES. THE PLAN SHALL PROVIDE DETAILS FOR STORING THESE MATERIALS AS WELL AS DISPOSING WASTE PETROLEUM PRODUCTS AND OTHER HAZARDOUS MATERIALS GENERATED BY THE PROJECT.

   IDENTIFY THE LOCATIONS WHERE HAZARDOUS MATERIAL STORAGE, FUELING AND MAINTENANCE ACTIVITIES WILL TAKE PLACE. IF ON-SITE, DESCRIBE THE MAINTENANCE ACTIVITIES AND LIST ALL CONTROLS TO PREVENT THE ACCIDENTAL SPILLAGE OF OIL, PETROLEUM PRODUCTS AND OTHER HAZARDOUS MATERIALS. DETAIL PROCEDURES FOR CONTAINMENT AND CLEANUP OF HAZARDOUS SUBSTANCES INCLUDING A LIST OF THE TYPES AND QUANTITIES OF EQUIPMENT AND MATERIALS AVAILABLE ON-SITE TO BE USED.

   THE PLAN SHALL PROVIDE DETAILS FOR PREVENTION, CONTAINMENT, CLEAN-UP AND DISPOSAL OF SOIL AND WATER CONTAMINATED BY ACCIDENTAL SPILLS AND FOR UNEXPECTED CONTAMINATED SOIL AND WATER ENCOUNTERED DURING CONSTRUCTION.

2. MATCH EXISTING GRADES AT PROJECT LIMITS AND WHERE REQUIRED TO MATCH ELEVATIONS AT EXISTING ROADS.

3. THE LOCATIONS OF EXISTING FEATURES AND UTILITIES SHOWN ON THE DRAWINGS ARE APPROXIMATE. ADDITIONAL UTILITIES MAY BE PRESENT HOWEVER ARE NOT SHOWN. THE CONTRACTOR SHALL VERIFY ALL UTILITY LOCATIONS IN THE FIELD AS NECESSARY, PRIOR TO BEGINNING WORK. THE HORIZONTAL AND VERTICAL LOCATIONS OF ALL UTILITIES ENCOUNTERED IN THE FIELD SHALL BE RECORDED ON THE CONTRACTOR'S RECORD DRAWINGS. CONTACT LOCAL UTILITY COMPANIES PRIOR TO ANY/ ALL EXCAVATIONS AT THE FOLLOWING TELEPHONE NUMBERS:

WATER AND WASTE MATERIAL	(907) 766-2237 OR 766-2200
POWER AND LIGHT (AP&T)	(907) 766-2331
CATV	(907) 766-2137
TELEPHONE (GTE)	(907) 766-2311

4. PROPERTY DISTURBED DURING CONSTRUCTION SHALL BE RESTORED TO ITS PRE-CONSTRUCTION CONDITION OR BETTER AT NO ADDITIONAL COST.

5. GRADING AND ALIGNMENT OF PIPE, STRUCTURES & FINAL SURFACING ARE SUBJECT TO MINOR REVISIONS BY THE ENGINEER TO FIT SITE CONDITIONS. GRADE ALL IMPROVEMENTS WITH POSITIVE DRAINAGE AWAY FROM STRUCTURES.

6. PROPERTY LINE LOCATIONS USED IN THESE PLANS ARE DERIVED FROM RECORD PLATS AND DO NOT REPRESENT A BOUNDARY SURVEY.

LEGEND

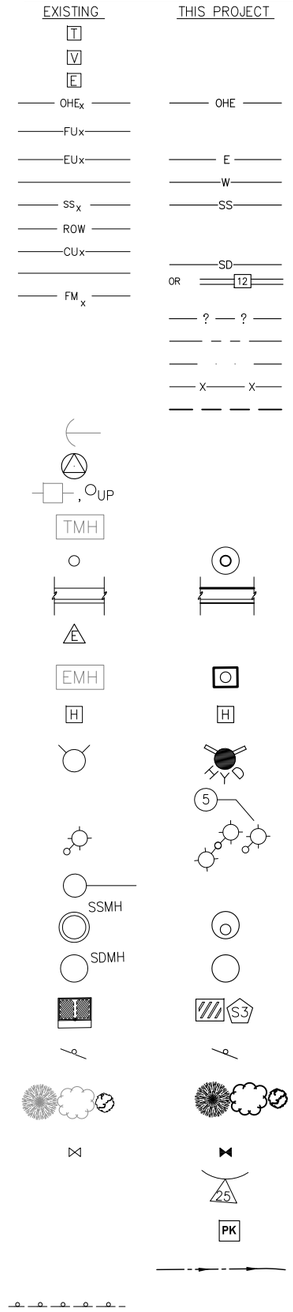

TELEPHONE PEDESTAL
TELEVISION PEDESTAL
ELECTRICAL PEDESTAL
OVERHEAD ELECTRICAL
BURIED FUEL LINE
ELECTRICAL (UNDERGROUND)
WATER
SANITARY SEWER
RIGHT-OF-WAY
COMMUNICATION (CABLE/TEL)
STORM DRAIN
FORCE MAIN
ESTIMATION OF LAYER
PROPERTY LINE
GRADE BREAK
GEOTEXTILE FABRIC
GEOTEXTILE REINFORCEMENT
GUY WIRE ANCHOR
SURVEY CONTROL
UTILITY POLE
TELEPHONE VAULT
BOLLARD
CURB & GUTTER
ELECTRICAL TRANSFORMER
ELECTRICAL VAULT
ELECTRICAL HANDHOLE
FIRE HYDRANT
LAYOUT POINT
LIGHT POLE
TRAFFIC SIGNAL
SANITARY SEWER MANHOLE
STORM DRAIN MANHOLE
STORM DRAIN INLET
SIGN
TREE/VEGETATION
WATER VALVE
LAYOUT RADIUS
PARKING KIOSK
SWALE
GUARDRAIL

ABBREVIATIONS

A	
@	AT
AC	ASBESTOS CEMENT PIPE
ACP	ASPHALT CONCRETE PAVEMENT
ADA	AMERICANS WITH DISABILITIES ACT
ADJ	ADJUSTABLE
APF	ASSOCIATED PILE AND FITTING CORP.
APPROX. or APPX.	APPROXIMATE
ATS	ALASKA TIDELANDS SURVEY
AV	AIR RELEASE VALVE
B	
BCC	BEGINNING OF CURB CUT
BFV	BUTTERFLY VALVE
BLDG	BUILDING
BOP/BP	BEGINNING OF PROJECT
BTM, BOT	BOTTOM
C	
C&G	CURB & GUTTER
CB	CATCH BASIN
CBJ	CITY & BOROUGH OF JUNEAU
CI	CAST IRON
CIP	CAST-IN-PLACE
CJ	CONTROL JOINT
℄	CENTER LINE
CLR	CLEAR
CMP	CORRUGATED METAL PIPE
CO	CLEANOUT
C.O.E.	CORPS OF ENGINEERS
COMM	COMMUNICATION
CONC.	CONCRETE
CP	COMPLETE PENETRATION
CPEP/CPP	CORRUGATED POLYETHYLENE PIPE
COR	CORNER
CSC	COUNTERSINK
CTR	CENTER
CY	CUBIC YARD
D	
DCP	DISSIMILAR PIPE COUPLING
D/DIA	DIAMETER
DBL	DOUBLE
DEMO	DEMOLITION
DL	DEAD LOAD
DIP	DUCTILE IRON PIPE
DIM	DIMENSION
DN	DOWN
DTL	DETAIL
E	
E	EAST
EA.	EACH
EC	EDGE OF CONCRETE
ECC	END OF CURB CUT
EG	EXISTING GRADE
EJ	EXPANSION JOINT
EL/ELEV	ELEVATION
ELEL	ELECTRICAL
EP	END OF PAVEMENT
EP	END PROJECT
EQ	EQUAL
EQUIP	EQUIPMENT
EST	ESTIMATE
EW	EACH WAY
EXC	EXCAVATE
EXIST	EXISTING
F	
FC	FACE OF CURB
FD	FLOOR DRAIN
FF	FINISHED FLOOR
FG	FINISHED GRADE
FH	FIRE HYDRANT, FLAT HEAD
FIN	FINISH (ED)
FM	FORCE MAIN SEWER
FND	FOUNDATION
FOC	FACE OF CURB
FT	FOOT
FTG	FOOTING
FL	FLOWLINE OR FLANGE
G	
GAL	GALLON
GALV	GALVANIZED
GB	GRADE BREAK
GPM	GALLONS PER MINUTE
GRD	GROUND
GV	GATE VALVE
H	
H&T	HUB & TACK
HD	HEAVY DUTY
HDG	HOT-DIPPED GALVANIZED
HDPE	HIGH DENSITY POLYETHYLENE
HORIZ	HORIZONTAL
HSE	HOUSE
HT	HEIGHT
HWY.	HIGHWAY
I	
IAW	IN ACCORDANCE WITH
ID	INSIDE DIAMETER
IE	INVERT ELEVATION
IN	INCH
IP	IRON PIPE
INCL	INCLUDE (D) (ING)
INSUL	INSULATE (D) (ION)
INV	INVERT
J	
JB	JUNCTION BOX
L	
LBS	POUNDS
LF	LINEAR FEET
LL	LIVE LOAD
LOC	LOCATION
LS	LUMP SUM
M	
MAX	MAXIMUM
M.E.	MATCH EXISTING
MECH	MECHANICAL
MFR	MANUFACTURE (R)
MH	MANHOLE
MJ	MECHANICAL JOINT
MI	MALLEABLE IRON
MIN	MINIMUM
MLLW	MEAN LOWER LOW WATER
MSF	1000 SQUARE FEET
MSE	MECHANICALLY STABILIZED EARTH
MTL	MATERIAL (S)
N	
N	NORTH
NFS	NON FROST SUSCEPTIBLE
NIC	NOT IN CONTRACT
NO	NUMBER
NTS	NOT TO SCALE
O	
OBD	OVERBURDEN
OC	ON CENTER
OD	OUTSIDE DIAMETER
OG	ORIGINAL GOUND
OHE	OVERHEAD ELECTRICAL
OWS	OIL-WATER SEPARATOR
OPP	OPPSITE
P	
P	PIPE
PC	POINT OF CURVATURE, PIECE
PCC	PRECAST CONCRATE
	POINT OF COMPOUND CURVATURE
PE	POLYETHYLENE
PED	PEDESTAL
PER	PERIMETER
PERF	PERFORATE (D)
PI	POINT OF INTERSECTION
PLWD	PLYWOOD
PL	PROPERTY LINE, PLATE
POC	POINT OF CURVE
PP	POLYPROPYLENE
PRC	POINT OF REVERSE CURVATURE
PROJ	PROJECT
PRKG	PARKING
PRV	PRESSURE REDUCING VALVE
PSI	POUND PER SQUARE INCH
PT	POINT, PRESSURE TREATED,
	POINT OF TANGENCY
PVC	POINT OF VERTICAL CURVATURE,
	POLY-VINYL CHLORIDE
PVI	POINT OF VERTICAL INTERSECTION
Q	
QTY	QUANTITY
R	
RAD	RADIUS
RE	RIM ELEVATION
REF	REFERENCE
REINF	REINFORCEMENT
REQD	REQUIRED
RET	RETAINING
RO	ROUGH OPENING
ROW	RIGHT OF WAY
S	
S	SOUTH
SCHED/SCH	SCHEDULE
SD	STORM DRAIN
SDI	STORM DRAIN INLET STRUCTURE
SDO	STORM DRAIN OUTLET STRUCTURE
SDR	STANDARD DIMENSION RATIO
SF	SQUARE FOOT
SHLDR	SHOULDER
SI	STREET INTERSECTION
SPEC	SPECIFICATION (S)
SQ	SQUARE
SRB	SHOT ROCK BORROW
SSC	SANITARY SEWER CONNECTION
SS	STAINLESS STEEL, SANITARY SEWER
SDMH	STORM DRAIN MANHOLE
SSMH	SANITARY SEWER MANHOLE
STA	STATION
STD	STANDARD
STL	STEEL
STRG	STRONG
SW	SIDEWALK
SWR	SEWER
SY	SQUARE YARD
SYM	SYMMETRICAL
T	
t	THICK
T&B	TOP AND BOTTOM
T&G	TONGUE AND GROOVE
TBC	TOP BACK OF CURB
TBD	TO BE DETERMINED
TBM	TEMPORARY BENCH MARK
TD	TRENCH DRAIN
TEL	TELEPHONE
TEMP	TEMPERATURE, TEMPORARY
TH	TEST HOLE
THK	THICK
TRANS	TRANSVERSE
TV	TELEVISION
TYP	TYPICAL
U	
UBC	UNIFORM BUILDING CODE
UE	UNDERGROUND ELECTRIC
UMC	UNIFORM MECHANICAL CODE
UHMW	ULTRA HIGH MOLECULAR WEIGHT
UON/UNO	UNLESS OTHERWISE NOTED
UPC	UNIFORM PLUMBING CODE
V	
VB	VALVE BOX
VERT	VERTICAL
VG	VALLEY GUTTER
W	
W	WEST
W/	WITH
WD	WOOD
WELDMT	WELDMENT
WL	WATERLINE
WQU	WATER QUALITY UNIT
WV	WATER VALVE
WW	WATER WATER
WWTP	WASTE WATER TREATMENT PLANT
W/O	WITHOUT
X	
XFMR	TRANSFORMER
<PT	ANGLE POINT

65% DESIGN REVIEW SUBMITTAL

REVISIONS

REV.	DATE	DESCRIPTION	DWN.	CKD.	APP.

PND ENGINEERS, INC.
9360 Glacier Highway, Ste. 100
Juneau, Alaska 99801
Phone: 907-586-2093
Fax: 907-586-2099
www.pndengineers.com

DESIGN: TCB CHECKED: CRS
DRAWN: KLL APPROVED:
SCALE: NTS
DATE: 3/13/15

HAINES BOROUGH
SOUTH PORTAGE COVE
HARBOR EXPANSION

SHEET TITLE:
GENERAL NOTES, LEGEND AND ABBREVIATIONS

PND PROJECT NO.: 102029

1.02

SHEET 2 OF 23

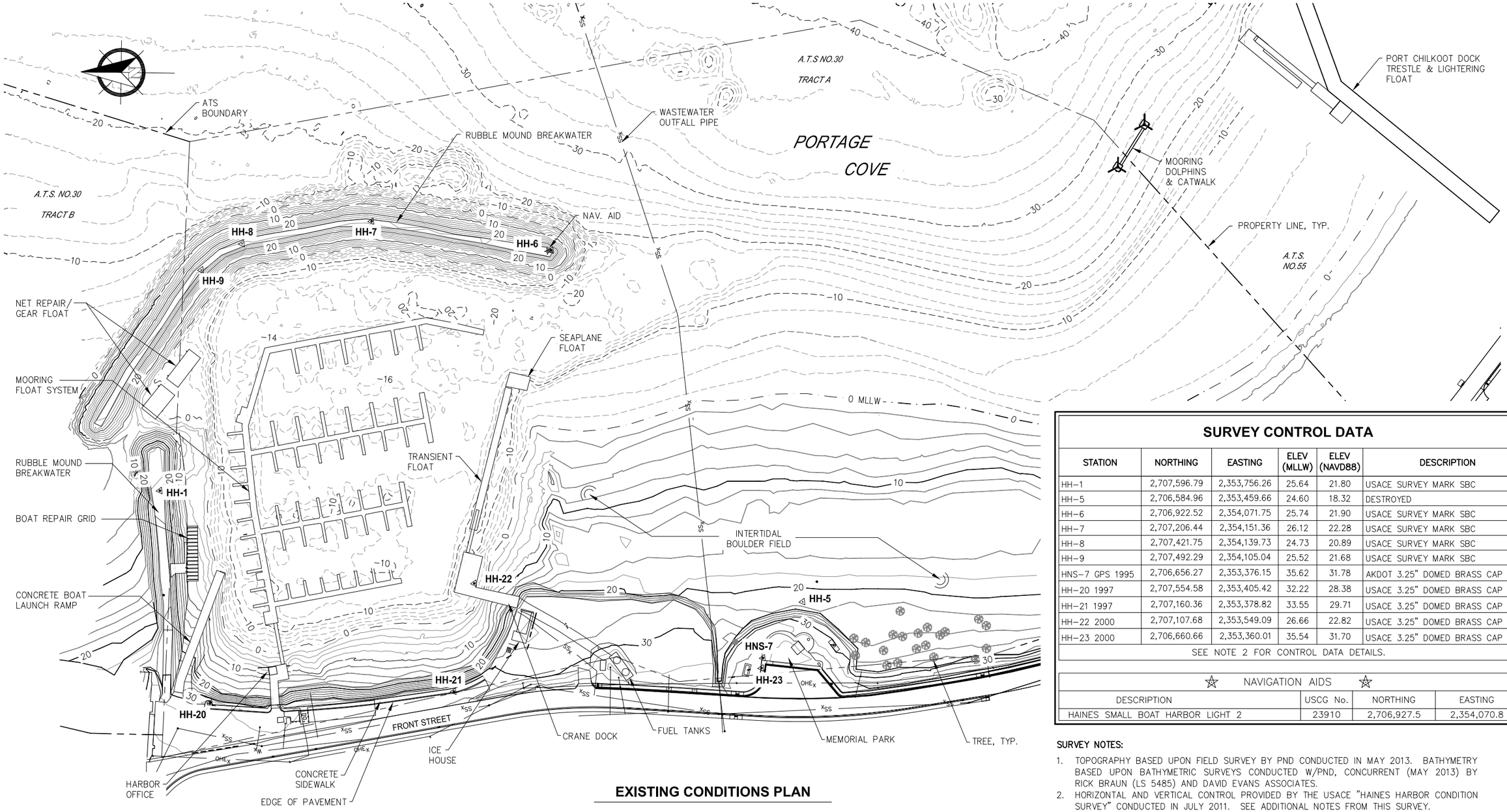

EXISTING CONDITIONS PLAN

SURVEY CONTROL DATA

STATION	NORTHING	EASTING	ELEV (MLLW)	ELEV (NAVD88)	DESCRIPTION
HH-1	2,707,596.79	2,353,756.26	25.64	21.80	USACE SURVEY MARK SBC
HH-5	2,706,584.96	2,353,459.66	24.60	18.32	DESTROYED
HH-6	2,706,922.52	2,354,071.75	25.74	21.90	USACE SURVEY MARK SBC
HH-7	2,707,206.44	2,354,151.36	26.12	22.28	USACE SURVEY MARK SBC
HH-8	2,707,421.75	2,354,139.73	24.73	20.89	USACE SURVEY MARK SBC
HH-9	2,707,492.29	2,354,105.04	25.52	21.68	USACE SURVEY MARK SBC
HNS-7 GPS 1995	2,706,656.27	2,353,376.15	35.62	31.78	AKDOT 3.25" DOMED BRASS CAP
HH-20 1997	2,707,554.58	2,353,405.42	32.22	28.38	USACE 3.25" DOMED BRASS CAP
HH-21 1997	2,707,160.36	2,353,378.82	33.55	29.71	USACE 3.25" DOMED BRASS CAP
HH-22 2000	2,707,107.68	2,353,549.09	26.66	22.82	USACE 3.25" DOMED BRASS CAP
HH-23 2000	2,706,660.66	2,353,360.01	35.54	31.70	USACE 3.25" DOMED BRASS CAP
SEE NOTE 2 FOR CONTROL DATA DETAILS.					

NAVIGATION AIDS

DESCRIPTION	USCG No.	NORTHING	EASTING
HAINES SMALL BOAT HARBOR LIGHT 2	23910	2,706,927.5	2,354,070.8

SURVEY NOTES:

1. TOPOGRAPHY BASED UPON FIELD SURVEY BY PND CONDUCTED IN MAY 2013. BATHYMETRY BASED UPON BATHYMETRIC SURVEYS CONDUCTED W/PND, CONCURRENT (MAY 2013) BY RICK BRAUN (LS 5485) AND DAVID EVANS ASSOCIATES.
2. HORIZONTAL AND VERTICAL CONTROL PROVIDED BY THE USACE "HAINES HARBOR CONDITION SURVEY" CONDUCTED IN JULY 2011. SEE ADDITIONAL NOTES FROM THIS SURVEY.
3. ALL EXISTING UTILITIES ARE SHOWN APPROXIMATE FROM SURVEYED INFORMATION AND ALSO AS-BUILT RECORDS PROVIDED BY THE HAINES BOROUGH.

65% DESIGN REVIEW SUBMITTAL

HAINES BOROUGH ALASKA

REVISIONS

REV.	DATE	DESCRIPTION	DWN.	CKD.	APP.

PND ENGINEERS, INC.
9360 Glacier Highway, Ste. 100
Juneau, Alaska 99801
Phone: 907-586-2093
Fax: 907-586-2099
www.pndengineers.com

DESIGN: TCB CHECKED: CRS
DRAWN: PJD APPROVED:
SCALE: SCALE IN FEET 0 80 160 FT.
DATE: 3/13/15

HAINES BOROUGH
SOUTH PORTAGE COVE
HARBOR EXPANSION

SHEET TITLE:
EXISTING CONDITIONS AND SURVEY CONTROL

PND PROJECT NO.: 102029

1.03

SHEET 3 OF 23

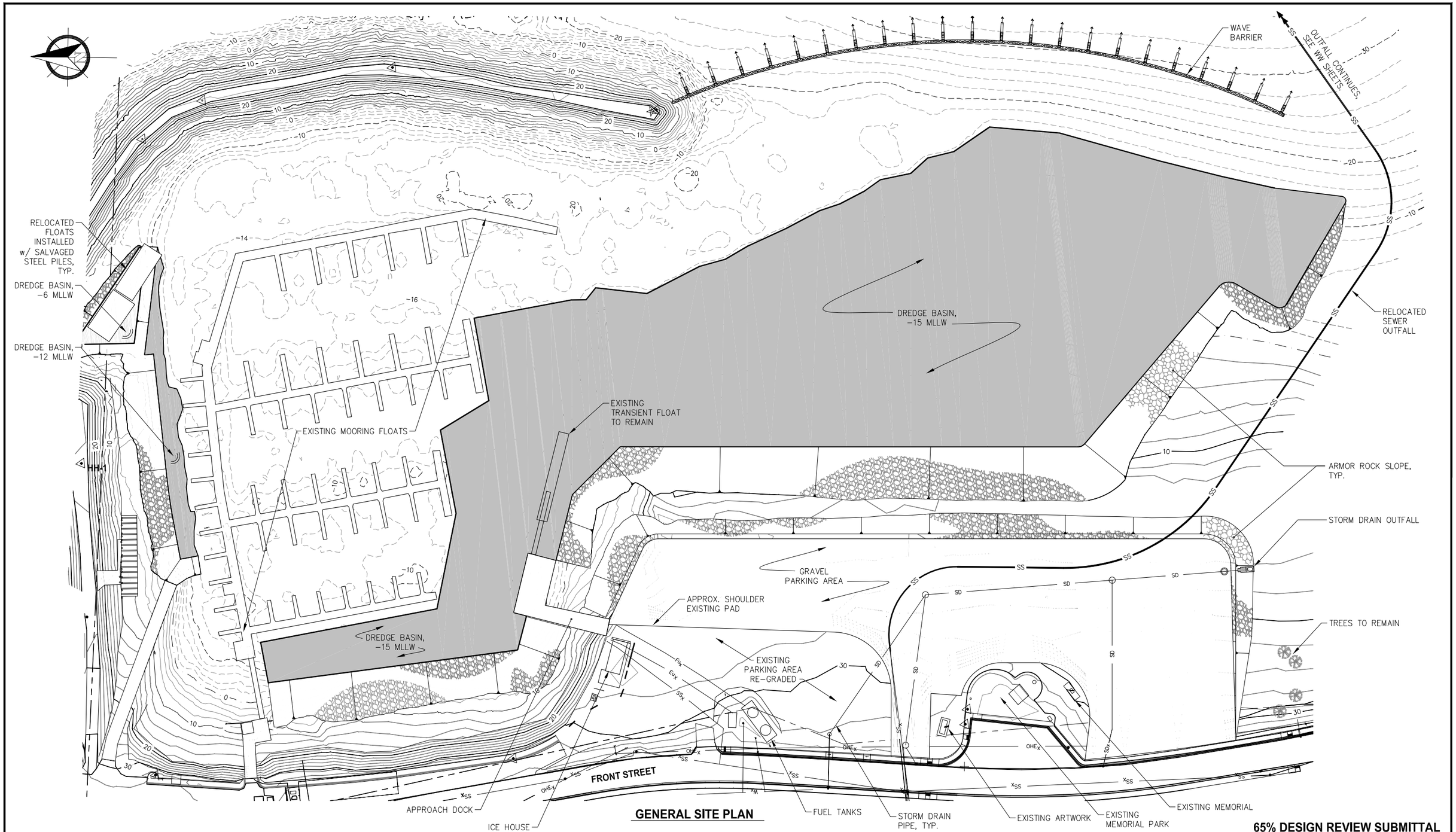

GENERAL SITE PLAN

65% DESIGN REVIEW SUBMITTAL

HAINES BOROUGH ALASKA

REVISIONS

REV.	DATE	DESCRIPTION	DWN.	CKD.	APP.

P N D ENGINEERS, INC.
9360 Glacier Highway, Ste. 100
Juneau, Alaska 99801
Phone: 907-586-2093
Fax: 907-586-2099
www.pndengineers.com

DESIGN: TCB CHECKED: CRS
DRAWN: PJD APPROVED:
SCALE: SCALE IN FEET 0 50 100 FT.
DATE: 3/13/15

HAINES BOROUGH SOUTH PORTAGE COVE HARBOR EXPANSION

SHEET TITLE: **GENERAL SITE PLAN**

PND PROJECT NO.: 102029

1.04

SHEET 4 OF 23

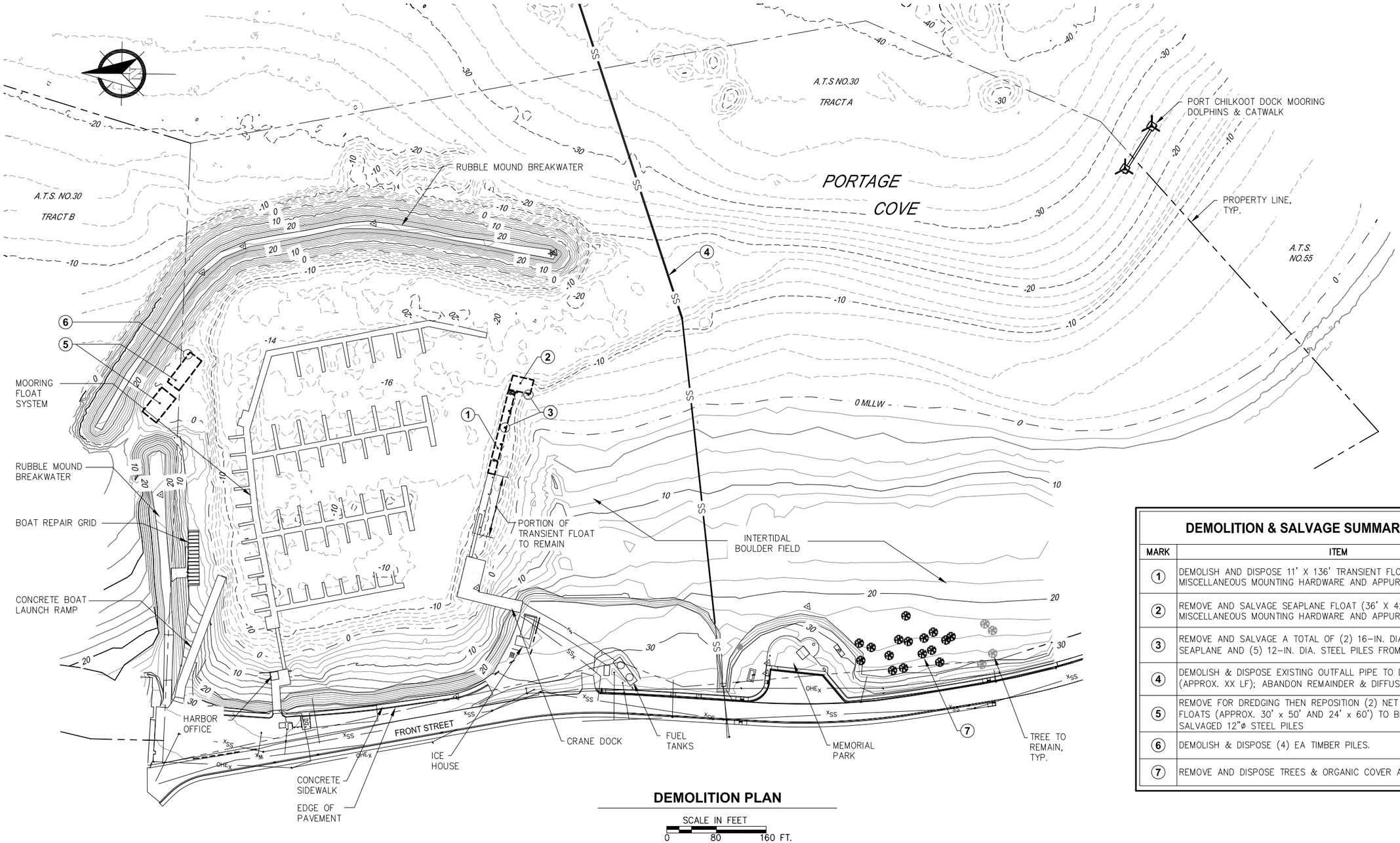

DEMOLITION PLAN

SCALE IN FEET

0 80 160 FT.

DEMOLITION & SALVAGE SUMMARY TABLE

MARK	ITEM
1	DEMOLISH AND DISPOSE 11' X 136' TRANSIENT FLOAT INCLUDING ALL MISCELLANEOUS MOUNTING HARDWARE AND APPURTENANCES.
2	REMOVE AND SALVAGE SEAPLANE FLOAT (36' X 42') INCLUDING ALL MISCELLANEOUS MOUNTING HARDWARE AND APPURTENANCES.
3	REMOVE AND SALVAGE A TOTAL OF (2) 16-IN. DIA. STEEL PILES FROM SEAPLANE AND (5) 12-IN. DIA. STEEL PILES FROM TRANSIENT FLOATS.
4	DEMOLISH & DISPOSE EXISTING OUTFALL PIPE TO DREDGING LIMITS, (APPROX. XX LF); ABANDON REMAINDER & DIFFUSER IN PLACE.
5	REMOVE FOR DREDGING THEN REPOSITION (2) NET REPAIR/ GEAR FLOATS (APPROX. 30' x 50' AND 24' x 60') TO BE REINSTALLED WITH SALVAGED 12"ø STEEL PILES
6	DEMOLISH & DISPOSE (4) EA TIMBER PILES.
7	REMOVE AND DISPOSE TREES & ORGANIC COVER AS REQUIRED.

65% DESIGN REVIEW SUBMITTAL

HAINES BOROUGH ALASKA

REVISIONS

REV.	DATE	DESCRIPTION	DWN.	CKD.	APP.

PND ENGINEERS, INC.
9360 Glacier Highway, Ste. 100
Juneau, Alaska 99801
Phone: 907-586-2093
Fax: 907-586-2099
www.pndengineers.com

DESIGN: TCB CHECKED: CRS
DRAWN: PJD APPROVED:
SCALE: AS SHOWN
DATE: 3/13/15

HAINES BOROUGH
SOUTH PORTAGE COVE
HARBOR EXPANSION

SHEET TITLE: **DEMOLITION PLAN**

PND PROJECT NO.: 102029

1.05

SHEET 5 OF 23

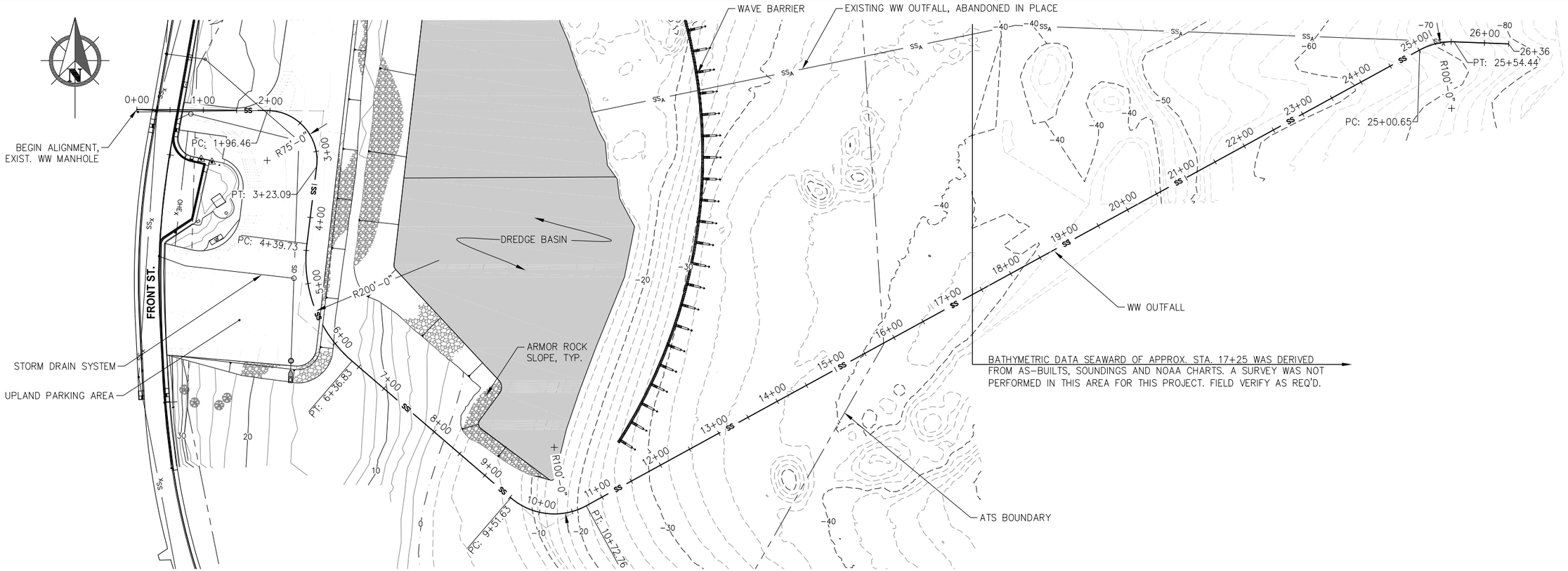

WASTEWATER OUTFALL PLAN

SCALE IN FEET 0 80 160 FT.

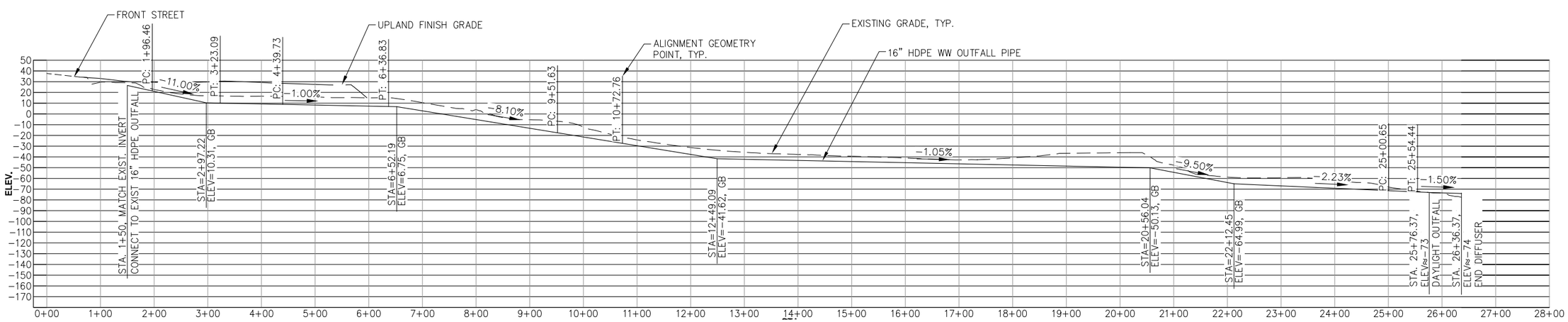

WASTEWATER OUTFALL PROFILE

SCALE IN FEET 0 100 200 FT.

65% DESIGN REVIEW SUBMITTAL

REVISIONS

REV.	DATE	DESCRIPTION	DWN.	CKD.	APP.

PND ENGINEERS, INC.
9360 Glacier Highway, Ste. 100
Juneau, Alaska 99801
Phone: 907-586-2093
Fax: 907-586-2099
www.pndengineers.com

DESIGN: TCB CHECKED: CRS
DRAWN: TCB APPROVED:
SCALE: AS SHOWN
DATE: 3/13/15

HAINES BOROUGH SOUTH PORTAGE COVE HARBOR EXPANSION

SHEET TITLE: **WASTEWATER OUTFALL PLAN & PROFILE**

PND PROJECT NO.: 102029

2.01

SHEET 6 OF 23

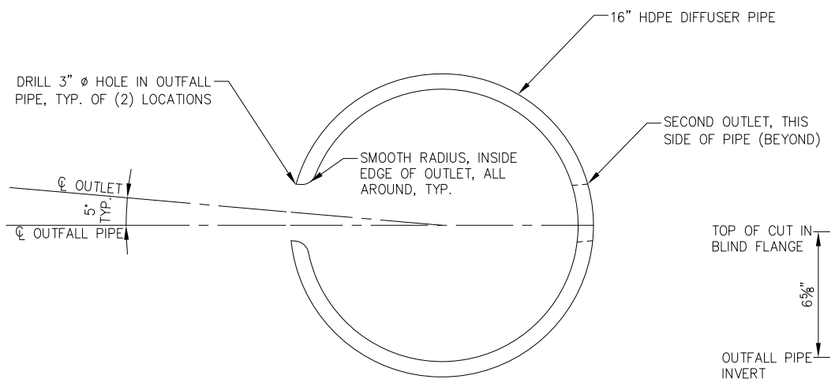

A / - DIFFUSER OUTLET TYPICAL SECTION

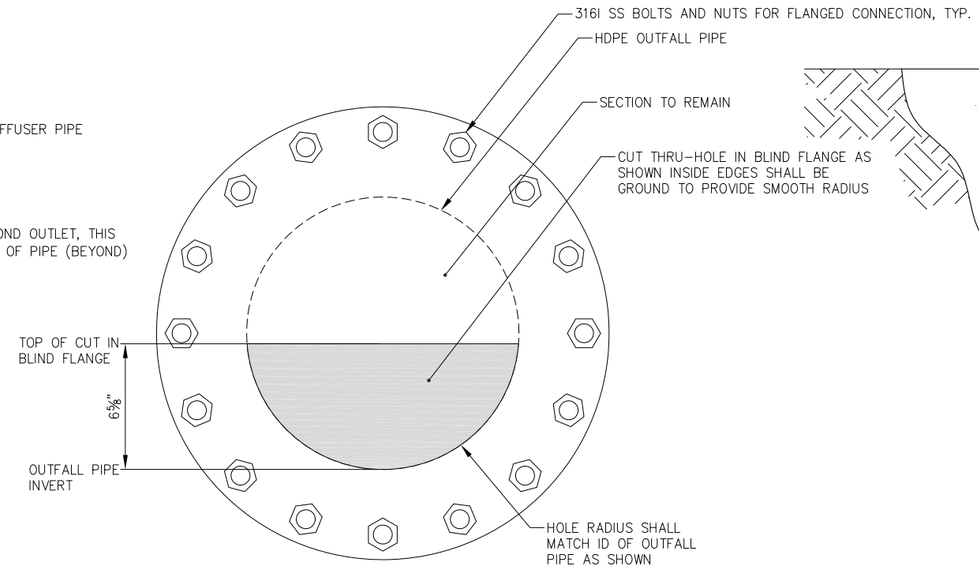

B / - DIFFUSER END ELEVATION

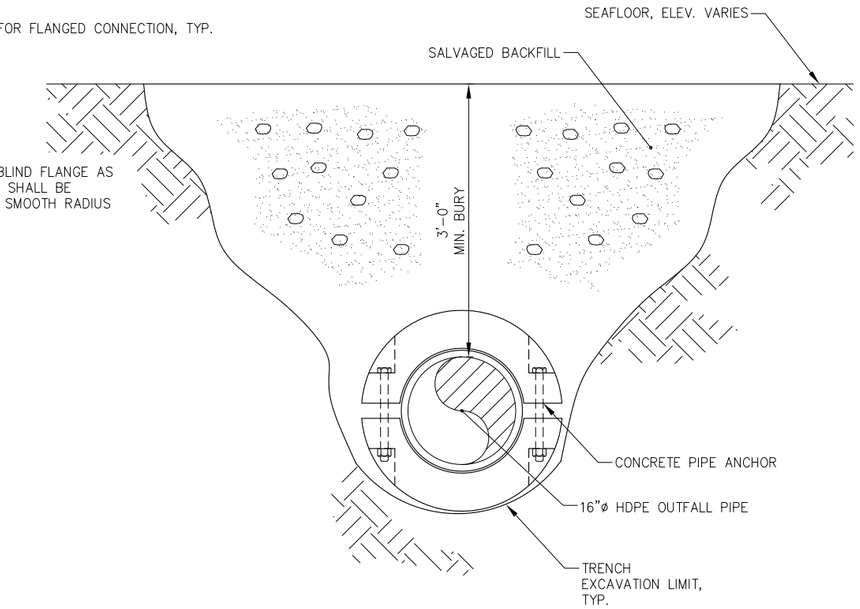

OUTFALL PIPE TRENCH SECTION

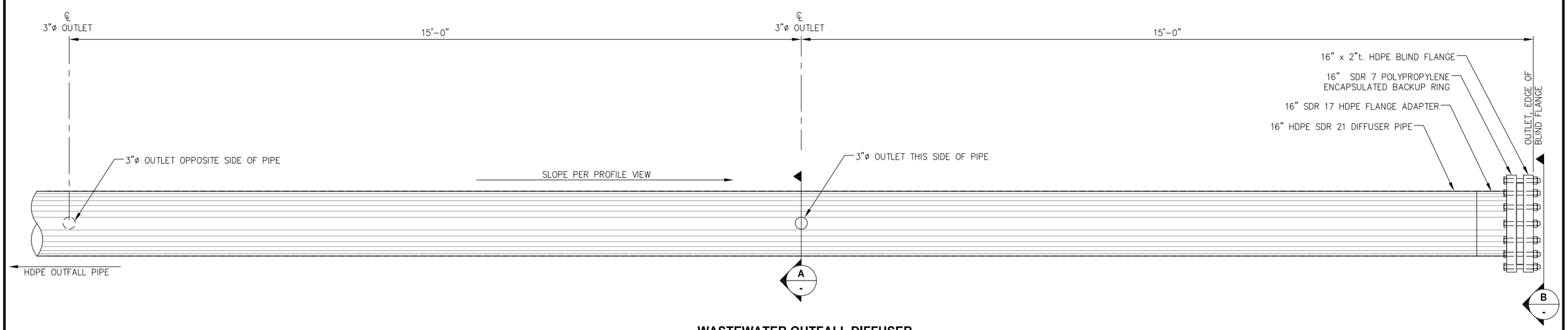

WASTEWATER OUTFALL DIFFUSER ELEVATION

65% DESIGN REVIEW SUBMITTAL

REVISIONS

REV.	DATE	DESCRIPTION	DWN.	CKD.	APP.

P N D ENGINEERS, INC.
9360 Glacier Highway, Ste. 100
Juneau, Alaska 99801
Phone: 907-586-2093
Fax: 907-586-2099
www.pndengineers.com

DESIGN: TCB CHECKED: CRS
DRAWN: TCB APPROVED:
SCALE: NTS
DATE: 3/13/15

HAINES BOROUGH
SOUTH PORTAGE COVE
HARBOR EXPANSION

SHEET TITLE: **WASTEWATER OUTFALL DETAILS**

PND PROJECT NO.: 102029

2.02

SHEET 7 OF 23

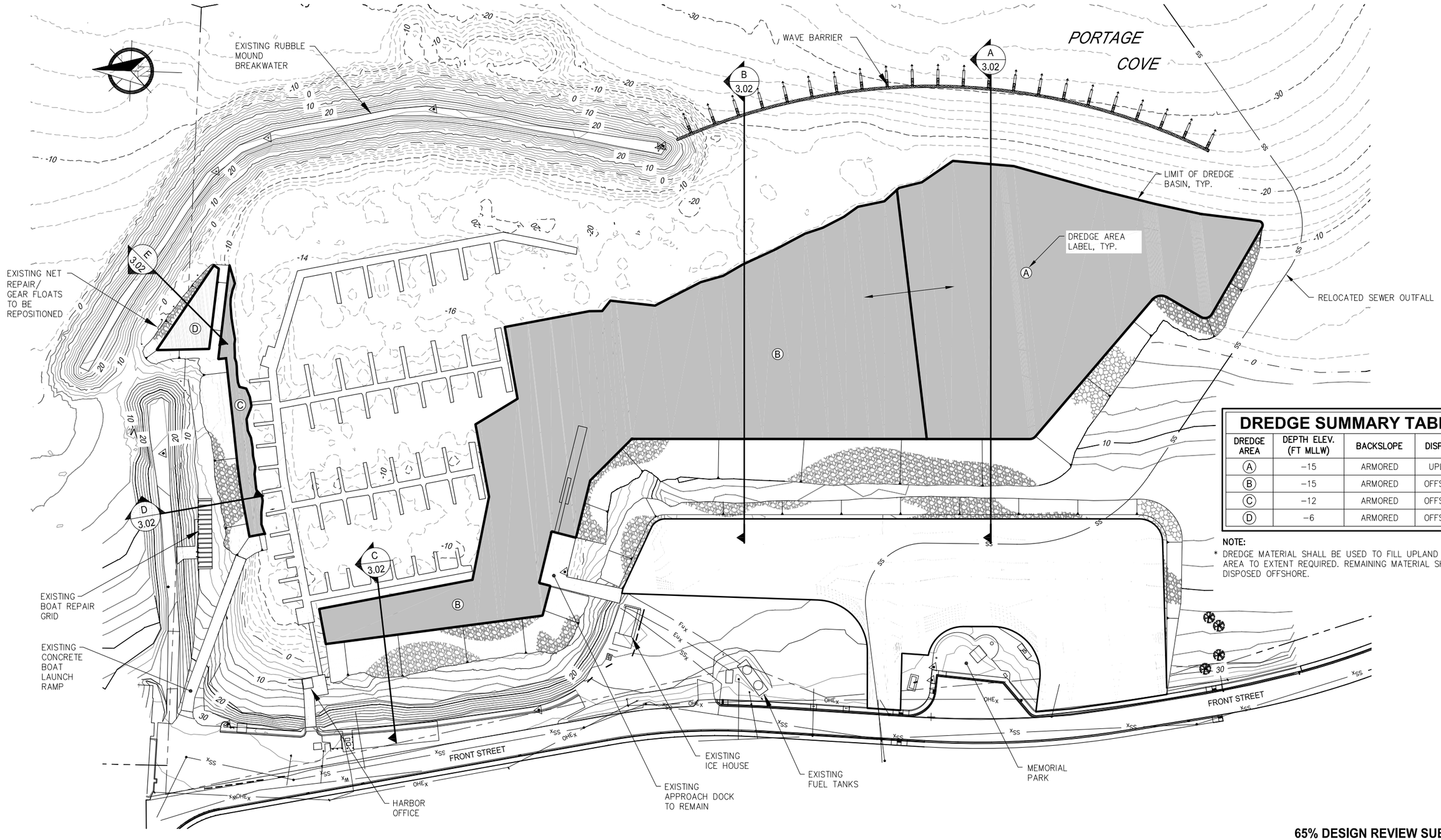

DREDGE SUMMARY TABLE

DREDGE AREA	DEPTH ELEV. (FT MLLW)	BACKSLOPE	DISPOSAL
A	−15	ARMORED	UPLAND *
B	−15	ARMORED	OFFSHORE
C	−12	ARMORED	OFFSHORE
D	−6	ARMORED	OFFSHORE

NOTE:

* DREDGE MATERIAL SHALL BE USED TO FILL UPLAND PARKING AREA TO EXTENT REQUIRED. REMAINING MATERIAL SHALL BE DISPOSED OFFSHORE.

65% DESIGN REVIEW SUBMITTAL

HAINES BOROUGH ALASKA

REVISIONS

REV.	DATE	DESCRIPTION	DWN.	CKD.	APP.

PND ENGINEERS, INC.
9360 Glacier Highway, Ste. 100
Juneau, Alaska 99801
Phone: 907-586-2093
Fax: 907-586-2099
www.pndengineers.com

DESIGN: TCB CHECKED: CRS
DRAWN: PJD APPROVED:
SCALE: SCALE IN FEET 0 60 120 FT.
DATE: 3/13/15

HAINES BOROUGH
SOUTH PORTAGE COVE
HARBOR EXPANSION

SHEET TITLE: DREDGING PLAN

PND PROJECT NO.: 102029

3.01

SHEET 8 OF 23

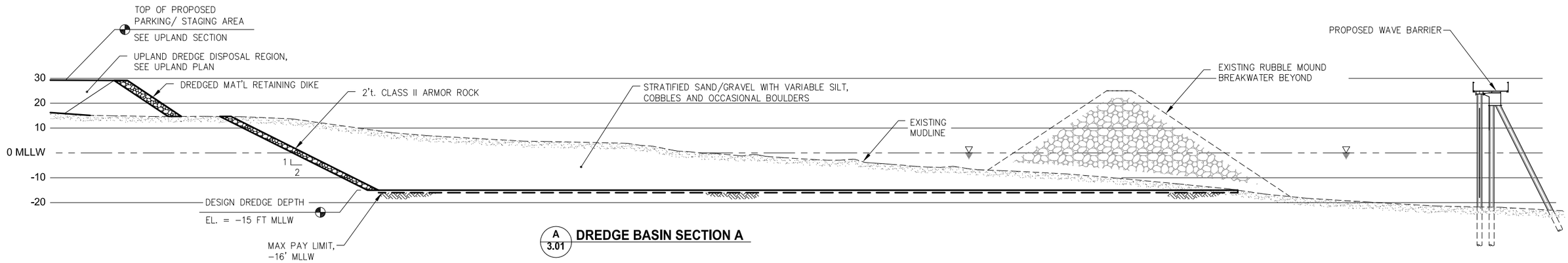

A 3.01 **DREDGE BASIN SECTION A**

NOTE:
SEE GEOTECHNICAL REPORT FOR DETAILED SOIL DESCRIPTIONS WITHIN DREDGE AREAS

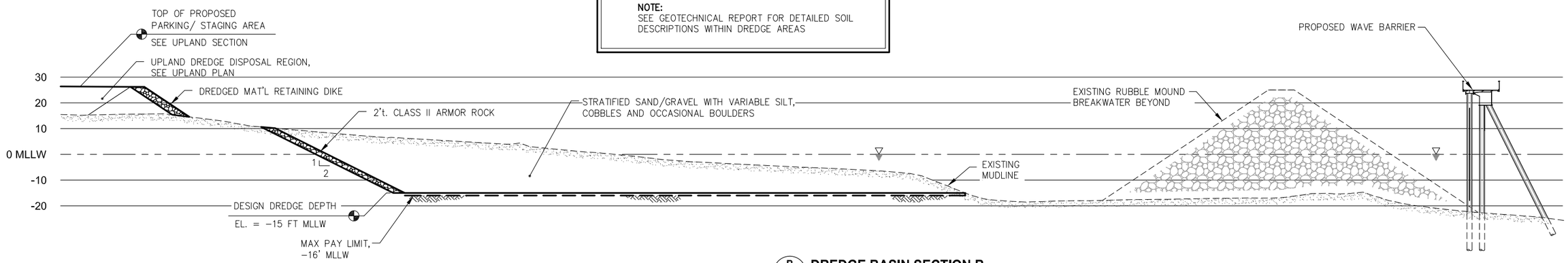

B 3.01 **DREDGE BASIN SECTION B**

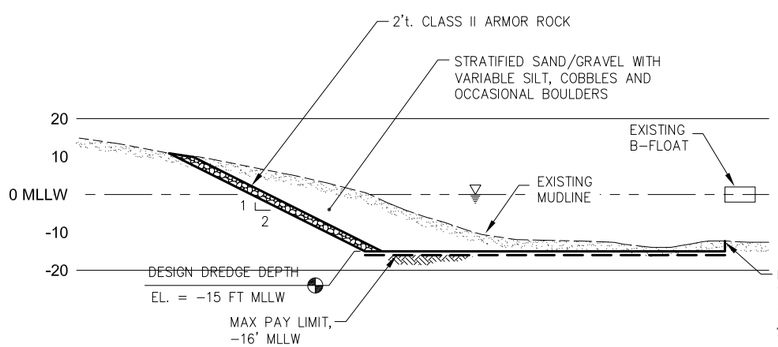

C 3.01 **DREDGE BASIN SECTION C**

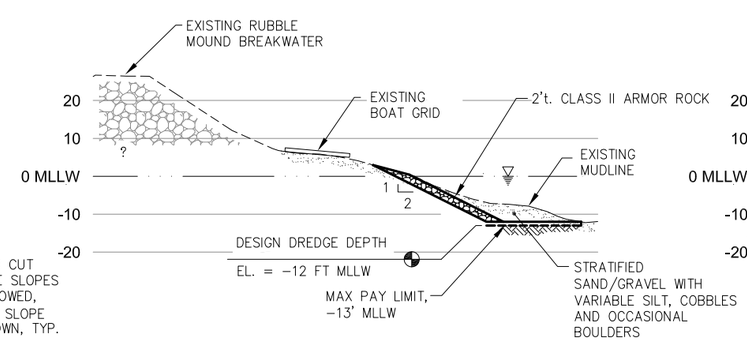

D 3.01 **DREDGE BASIN SECTION D**

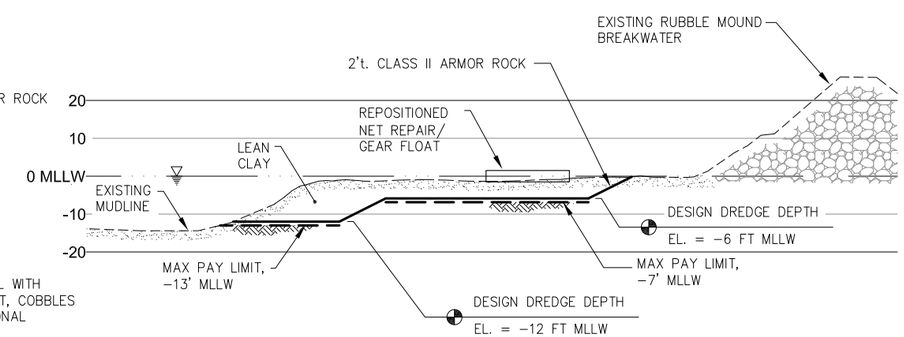

E 3.01 **DREDGE BASIN SECTION E**

65% DESIGN REVIEW SUBMITTAL

REVISIONS

REV.	DATE	DESCRIPTION	DWN.	CKD.	APP.

PND ENGINEERS, INC.
9360 Glacier Highway, Ste. 100
Juneau, Alaska 99801
Phone: 907-586-2093
Fax: 907-586-2099
www.pndengineers.com

DESIGN: TCB CHECKED: CRS
DRAWN: PJD APPROVED:
SCALE: SCALE IN FEET 0 20 40 FT.
DATE: 3/13/15

HAINES BOROUGH
SOUTH PORTAGE COVE
HARBOR EXPANSION

SHEET TITLE: **DREDGING SECTIONS**

3.02

PND PROJECT NO.: 102029

OFFSHORE DISPOSAL SITE
± 50 ACRES

HISTORICAL DREDGE DISPOSAL AREA

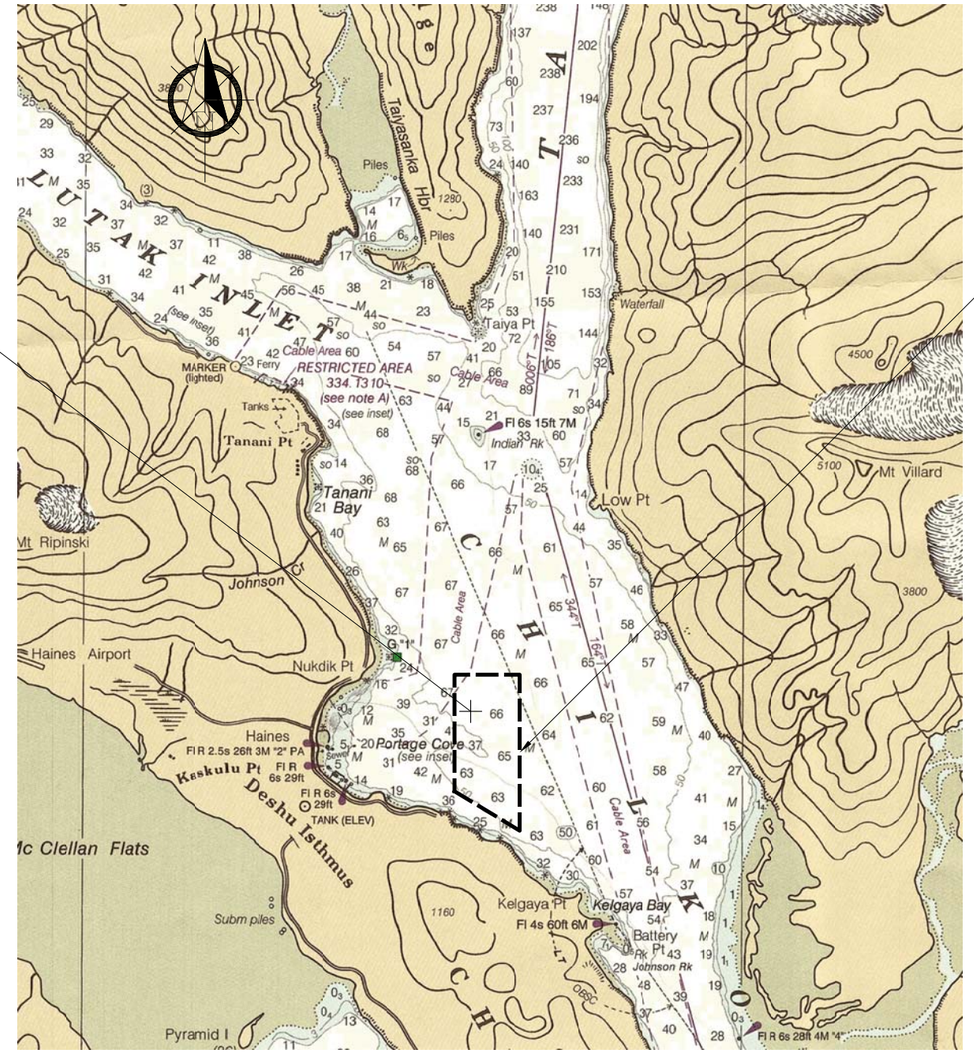

OFFSHORE DISPOSAL SITE CENTER:

LAT: N 59°14'18"

LONG: W 135°24'12"

NOTE:
CENTER LOCATION APPROXIMATE

BATHYMETRY FROM: NOAA 17317
LYNN CANAL – SHERMAN POINT TO SKAGWAY

DISPOSAL SITE PLAN

SCALE IN MILES
0 ¼ ½

65% DESIGN REVIEW SUBMITTAL

REVISIONS

REV.	DATE	DESCRIPTION	DWN.	CKD.	APP.

PND ENGINEERS, INC.
9360 Glacier Highway, Ste. 100
Juneau, Alaska 99801
Phone: 907-586-2093
Fax: 907-586-2099
www.pndengineers.com

DESIGN: NJS CHECKED: CRS
DRAWN: PJD APPROVED:
SCALE: AS SHOWN
DATE: 3/13/15

HAINES BOROUGH
SOUTH PORTAGE COVE
HARBOR EXPANSION

SHEET TITLE: **DREDGING OFFSHORE DISPOSAL SITE PLAN**

PND PROJECT NO.: 102029

3.03
SHEET 10 OF 23

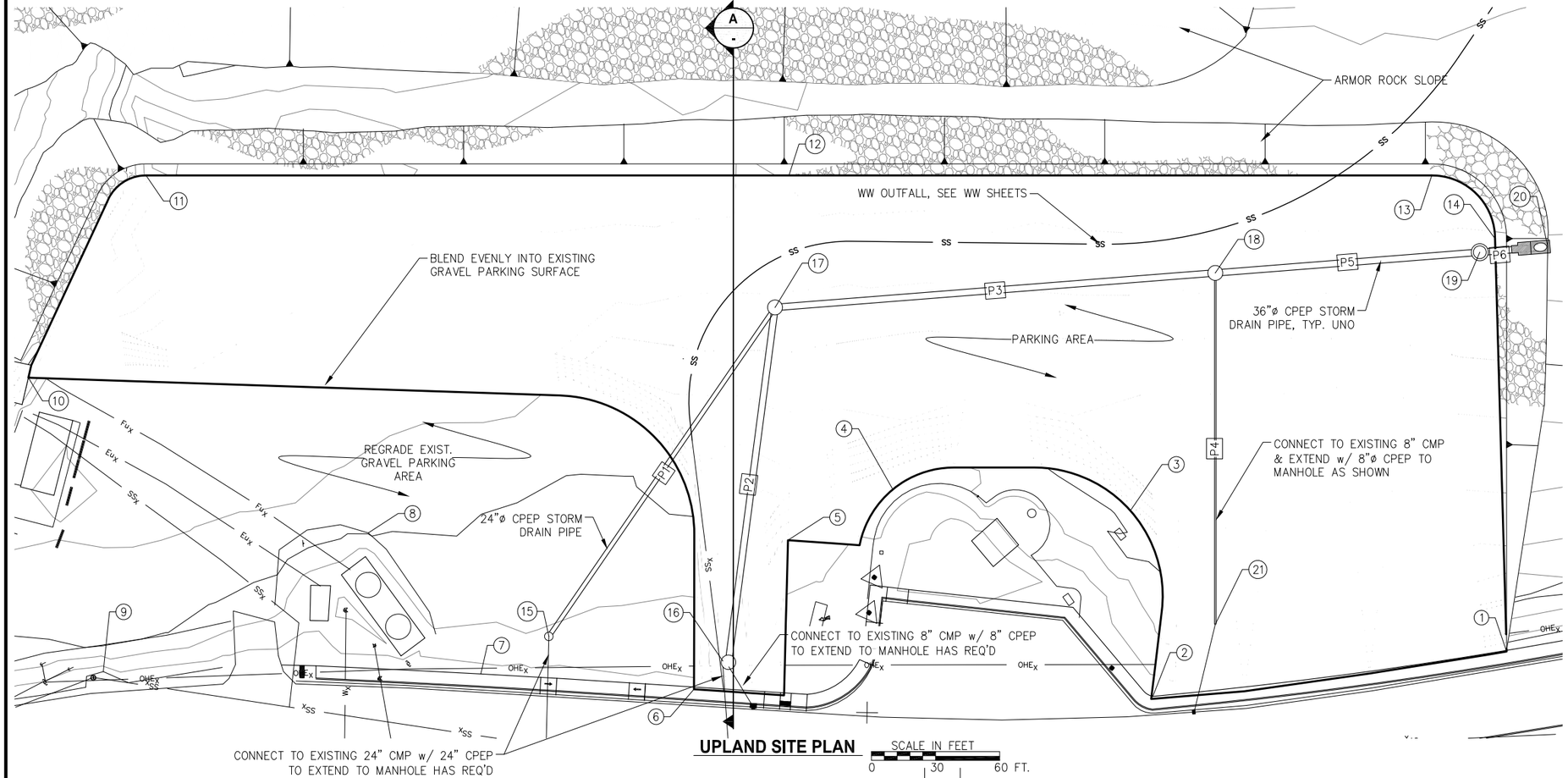

UPLAND SITE PLAN

LAYOUT TABLE

POINT NO.	NORTHING	EASTING	ELEVATION	DESCRIPTION
1	2706366.28	2353307.78	35.30	FG
2	2706533.14	2353305.71	35.09	FG
3	2706533.71	2353393.21	29.25	FG
4	2706643.00	2353415.70	33.19	FG
5	2706694.45	2353397.70	32.19	FG
6	2706746.04	2353333.44	34.11	FG
7	2706844.33	2353351.87	33.99	FG
8	2706889.17	2353423.39	29.87	FG
9	2707019.73	2353373.05	35.11	FG
10	2707038.93	2353513.56	27.10	FG
11	2706973.49	2353601.30	25.26	FG
12	2706674.63	2353567.13	29.05	FG
13	2706375.76	2353532.96	27.99	FG
14	2706349.73	2353500.20	28.99	FG
15	2706810.73	2353365.73	32.18	SDMH
16	2706731.20	2353345.06	33.70	SDMH
17	2706688.10	2353506.52	30.05	SDMH
18	2706481.60	2353499.14	27.73	SDMH
19	2706357.55	2353494.70	29.18	SD OWS
20	2706325.63	2353493.81	16.38	SD OUTFALL
21	2706500.25	2353335.96	32.38	CONNECT TO EXIST SD

STORM DRAIN PIPE SUMMARY

DESIGNATION	TYPE	LENGTH (LF)
P1	24" CPEP	190
P2	36" CPEP	170
P3	36" CPEP	210
P4	8" CPEP	165
P5	36" CPEP	125
P6	36" CPEP	15

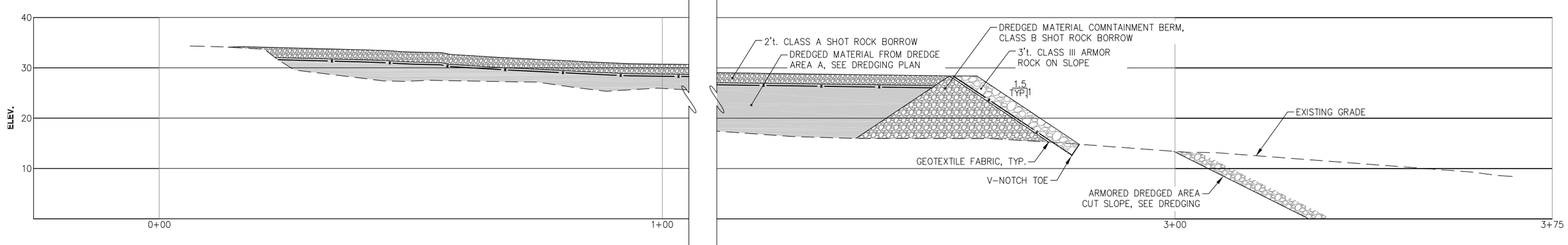

A UPLAND PROFILE

SCALE IN FEET
0
10
20 FT.

65% DESIGN REVIEW SUBMITTAL

REVISIONS

REV.	DATE	DESCRIPTION	DWN.	CKD.	APP.

PND ENGINEERS, INC.
9360 Glacier Highway, Ste. 100
Juneau, Alaska 99801
Phone: 907-586-2093
Fax: 907-586-2099
www.pndengineers.com

DESIGN: TCB CHECKED: CRS
DRAWN: TCB APPROVED:
SCALE: AS SHOWN
DATE: 3/13/15

HAINES BOROUGH
SOUTH PORTAGE COVE
HARBOR EXPANSION

SHEET TITLE:
UPLAND SITE PLAN AND PROFILE

PND PROJECT NO.: 102029

4.01

SHEET 11 OF 23

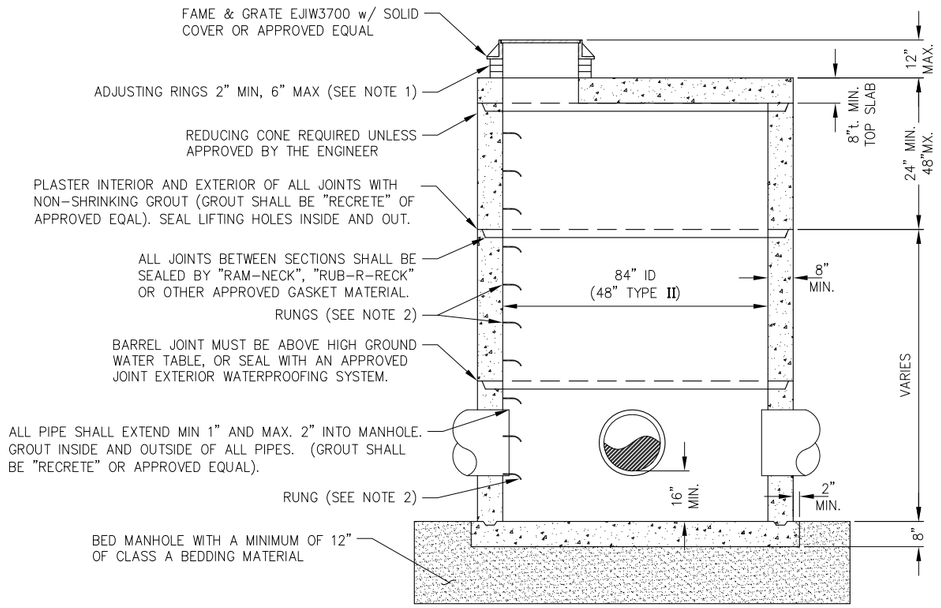

NOTES:

1. ADJUSTING RINGS SHALL BE EJIW INFRA RISER OR APPROVED EQUAL.
2. RUNG TO BE PLACED 12" O.C. ON OBSTRUCTED SIDE OF MANHOLE. LAST RUNG SHALL BE 18" MAX FROM BOTTOM OF MANHOLE, AND TOP RUNG SHALL BE 6" MAX FROM TOP OF CONE. IF UNOBSTRUCTED SIDE NOT AVAILABLE, LAST RUNG SHALL BE PLACED 6" OVER SMALLEST PIPE. REFER TO ASTM C-478.
3. BLOCKOUTS MUST BE FORMED.
4. COVER SHALL BE STENCILED "DRAIN".
5. TYPE II MANHOLES SHALL HAVE INTEGRAL BASE.

STORM DRAIN MANHOLE TYPE I (AS SHOWN)

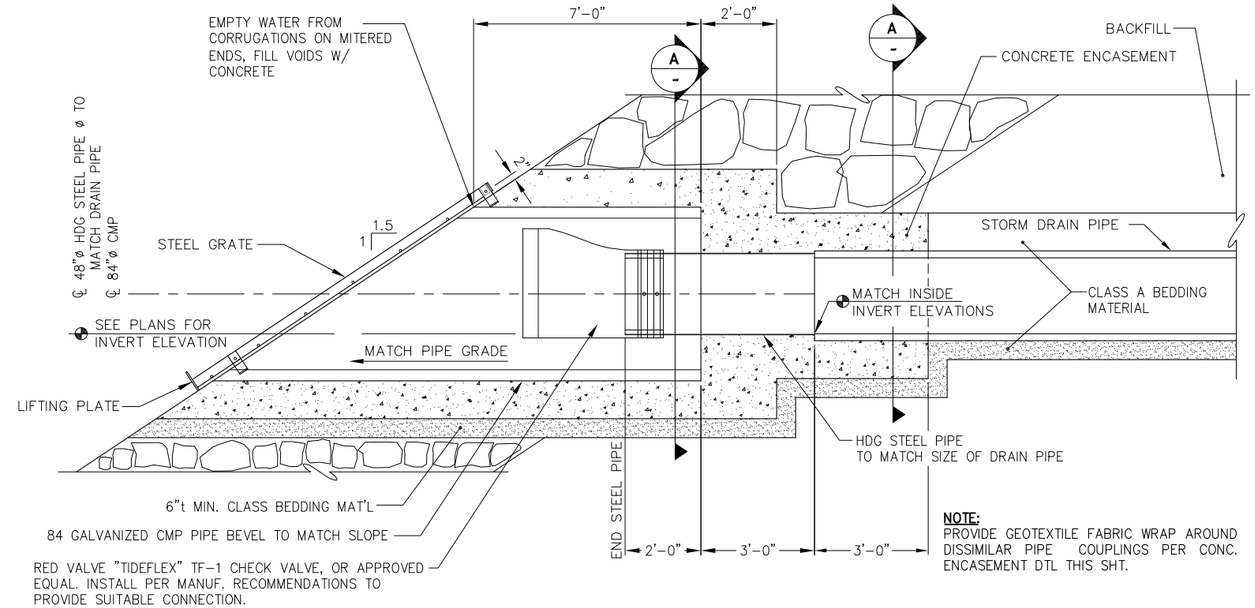

NOTE:
PROVIDE GEOTEXTILE FABRIC WRAP AROUND DISSIMILAR PIPE COUPLINGS PER CONC. ENCASEMENT DTL THIS SHT.

TYPICAL SECITON- STORM DRAIN OUTFALL STURCTURE

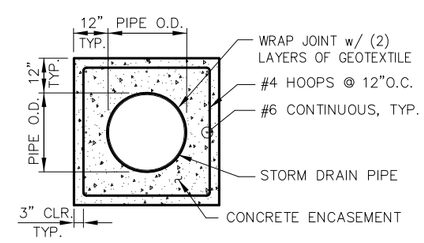

A
-
CONCRETE ENCASEMENT SECTION

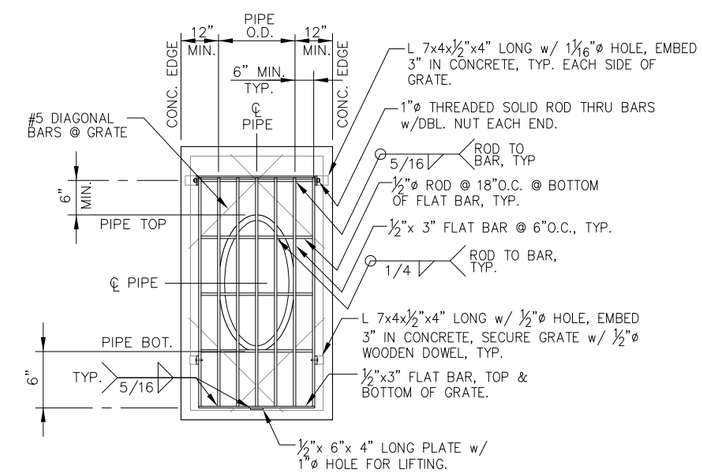

STEEL GRATE

65% DESIGN REVIEW SUBMITTAL

REVISIONS

REV.	DATE	DESCRIPTION	DWN.	CKD.	APP.

P N D ENGINEERS, INC.
9360 Glacier Highway, Ste. 100
Juneau, Alaska 99801
Phone: 907-586-2093
Fax: 907-586-2099
www.pndengineers.com

DESIGN: TCB CHECKED: CRS
DRAWN: DRD APPROVED:
SCALE: NTS
DATE: 3/13/15

HAINES BOROUGH
SOUTH PORTAGE COVE
HARBOR EXPANSION

SHEET TITLE: **STORM DRAIN DETAILS**

PND PROJECT NO.: 102029

4.02

SHEET 12 OF 23

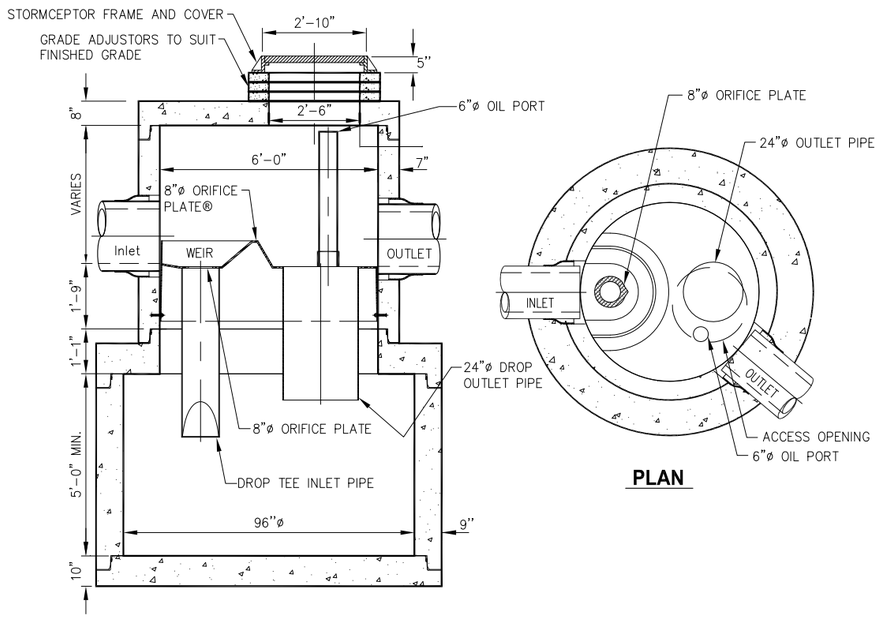

SECTION THROUGH CHAMBER

PLAN

OIL WATER SEPERATOR

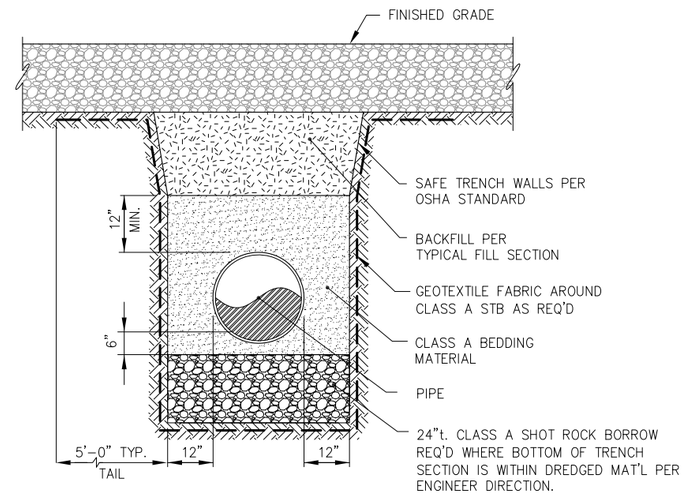

TYPICAL STORM DRAIN PIPE BEDDING SCTION

65% DESIGN REVIEW SUBMITTAL

REVISIONS

REV.	DATE	DESCRIPTION	DWN.	CKD.	APP.

PND ENGINEERS, INC.
9360 Glacier Highway, Ste. 100
Juneau, Alaska 99801
Phone: 907-586-2093
Fax: 907-586-2099
www.pndengineers.com

DESIGN: TCB CHECKED: CRS
DRAWN: DRD APPROVED:
SCALE: NTS
DATE: 3/13/15

HAINES BOROUGH
SOUTH PORTAGE COVE
HARBOR EXPANSION

SHEET TITLE:
STORM DRAIN DETAILS

PND PROJECT NO.: 102029

4.03

SHEET 13 OF 23

NOTES:

1. VERTICAL DATUM IS MEAN LOWER LOW WATER (MLLW = 0 FEET).
2. ENCOUNTERING COBBLE AND BOULDER-SIZE MATERIAL SHOULD BE ANTICIPATED WITHIN ANY OF THE REPRESENTED SOIL HORIZONS.
3. MAINTAIN VESSEL ACCESS TO EXISTING MOORAGE FLOATS AT ALL TIMES.

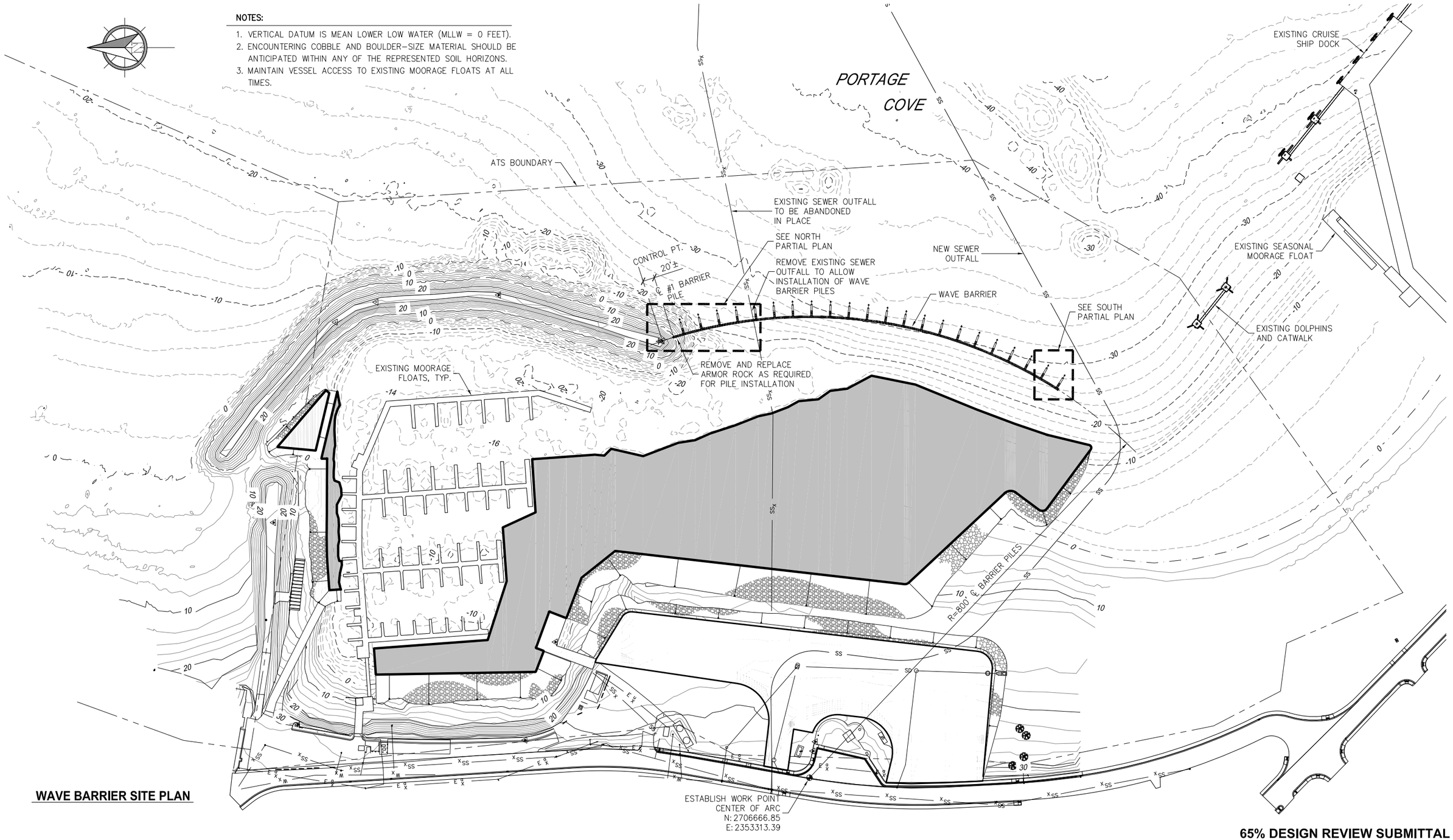

WAVE BARRIER SITE PLAN

65% DESIGN REVIEW SUBMITTAL

REVISIONS

REV.	DATE	DESCRIPTION	DWN.	CKD.	APP.

PND ENGINEERS, INC.
9360 Glacier Highway, Ste. 100
Juneau, Alaska 99801
Phone: 907-586-2093
Fax: 907-586-2099
www.pndengineers.com

DESIGN: JDO CHECKED: CRS
DRAWN: DRH APPROVED:
SCALE: SCALE IN FEET 0 40 80 160 FT.
DATE: MAR. 2015

HAINES BOROUGH
SOUTH PORTAGE COVE
HARBOR EXPANSION

SHEET TITLE:
WAVE BARRIER SITE PLAN

PN&D PROJECT NO.: 102029.10

5.01
SHEET 14 OF 23

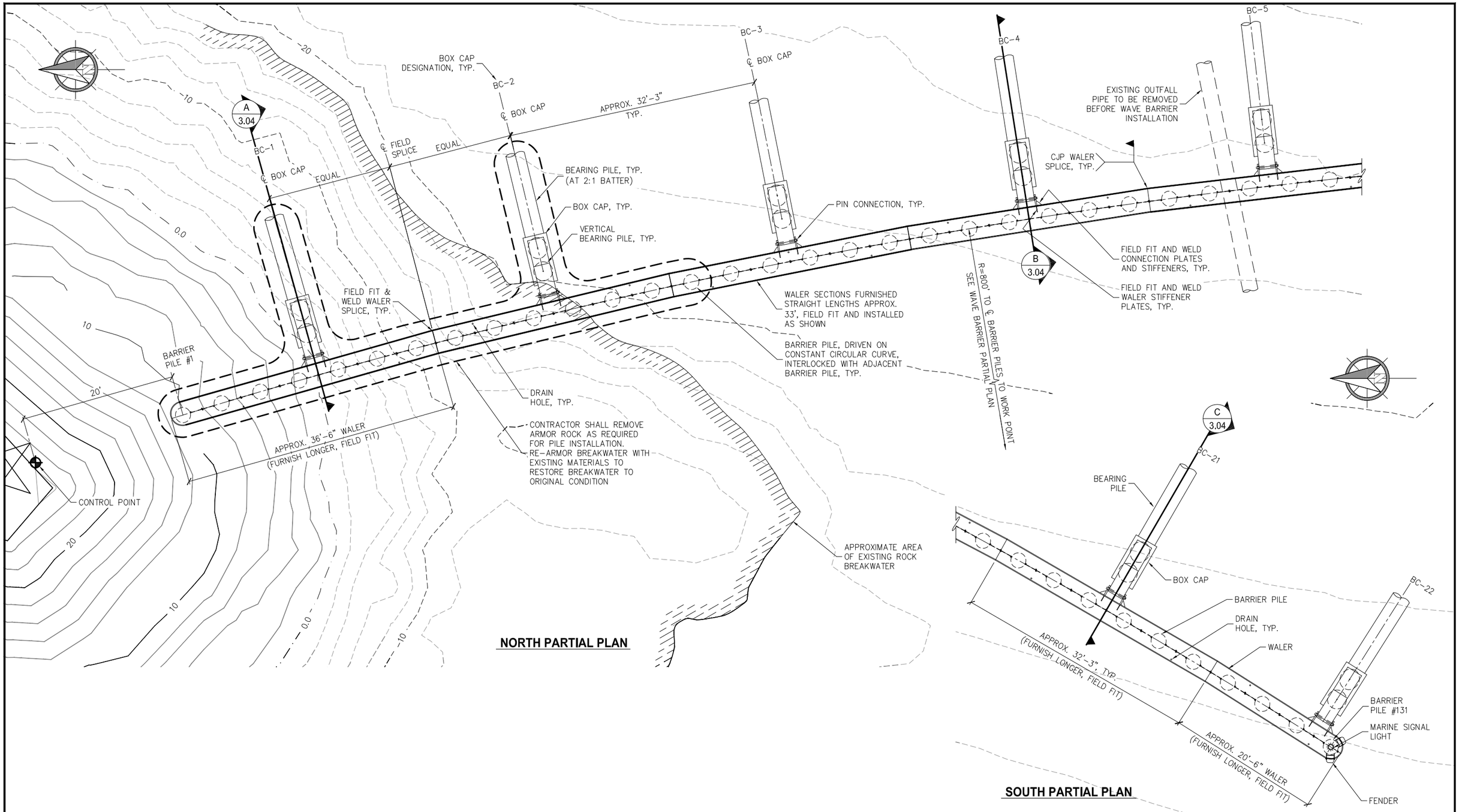

65% DESIGN REVIEW SUBMITTAL

REVISIONS

REV.	DATE	DESCRIPTION	DWN.	CKD.	APP.

P N D ENGINEERS, INC.
9360 Glacier Highway, Ste. 100
Juneau, Alaska 99801
Phone: 907-586-2093
Fax: 907-586-2099
www.pndengineers.com

DESIGN: JDO CHECKED: CRS
DRAWN: DRH APPROVED:
SCALE: SCALE IN FEET 0 6 12 FT.
DATE: MAR. 2015

HAINES BOROUGH
SOUTH PORTAGE COVE
HARBOR EXPANSION

SHEET TITLE:
WAVE BARRIER PARTIAL PLAN

PN&D PROJECT NO.: 102029.10

5.02
SHEET 15 OF 23

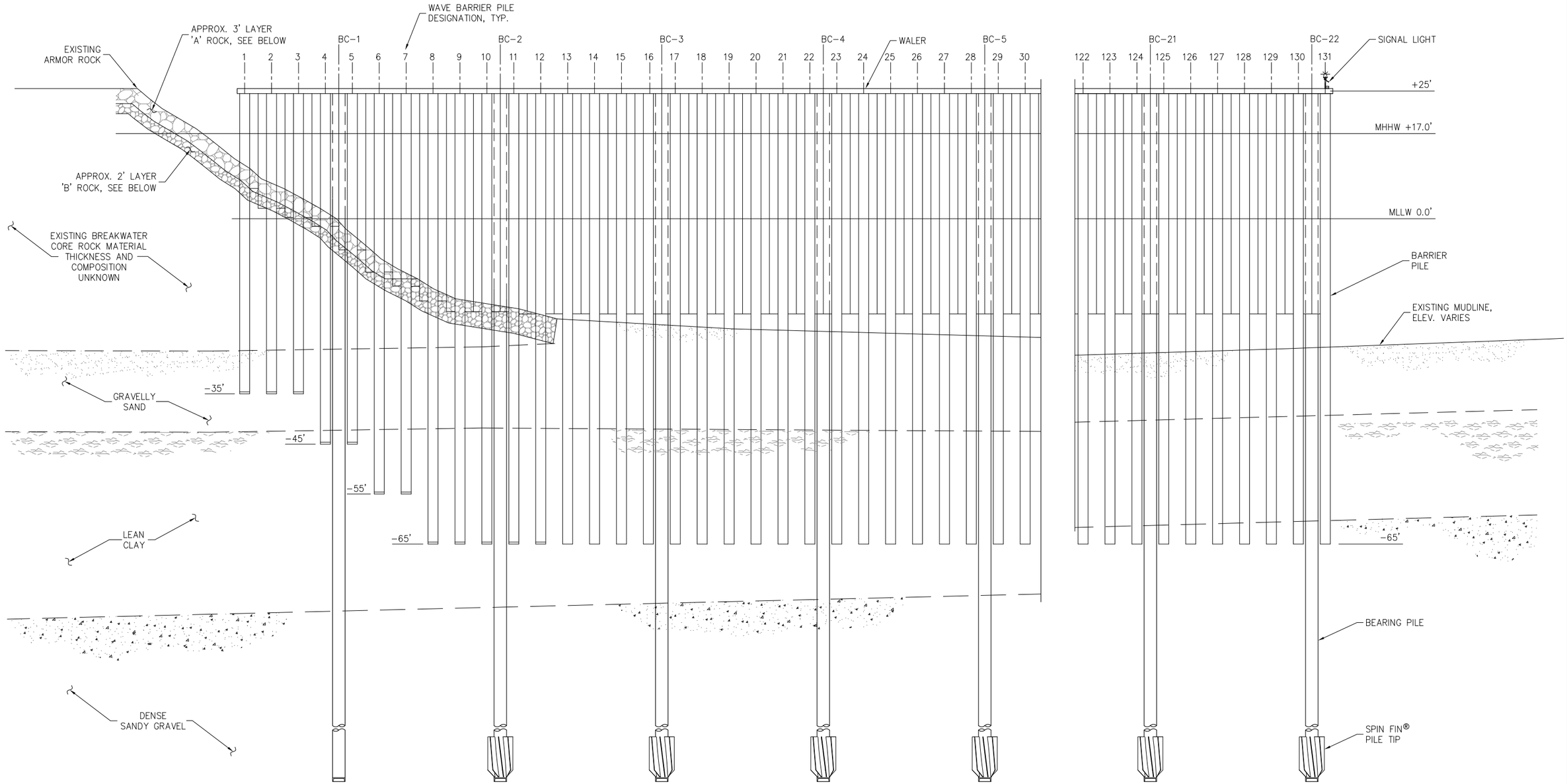

ESTIMATED ARMOR ROCK SIZE
'A' ROCK 650lb TO 2,300lb (2' TO 3' DIAMETER)
'B' ROCK 65lb TO 650lb (1' TO 2' DIAMETER

PARTIAL ELEVATION

65% DESIGN REVIEW SUBMITTAL

SPIN FIN® PILE IS A REGISTERED TRADEMARK OF PND ENGINEERS, INC.

REVISIONS

REV.	DATE	DESCRIPTION	DWN.	CKD.	APP.

PND ENGINEERS, INC.
9360 Glacier Highway, Ste. 100
Juneau, Alaska 99801
Phone: 907-586-2093
Fax: 907-586-2099
www.pndengineers.com

DESIGN: JDO CHECKED: CRS
DRAWN: DRH APPROVED:
SCALE: SCALE IN FEET 0 10 20 FT.
DATE: MAR. 2015

HAINES BOROUGH
SOUTH PORTAGE COVE
HARBOR EXPANSION

SHEET TITLE: **PARTIAL ELEVATION**

PN&D PROJECT NO.: 102029.10

5.03

ESTIMATED ARMOR ROCK SIZE
'A' ROCK 650lb TO 2,300lb (2' TO 3' DIAMETER)
'B' ROCK 65lb TO 650lb (1' TO 2' DIAMETER

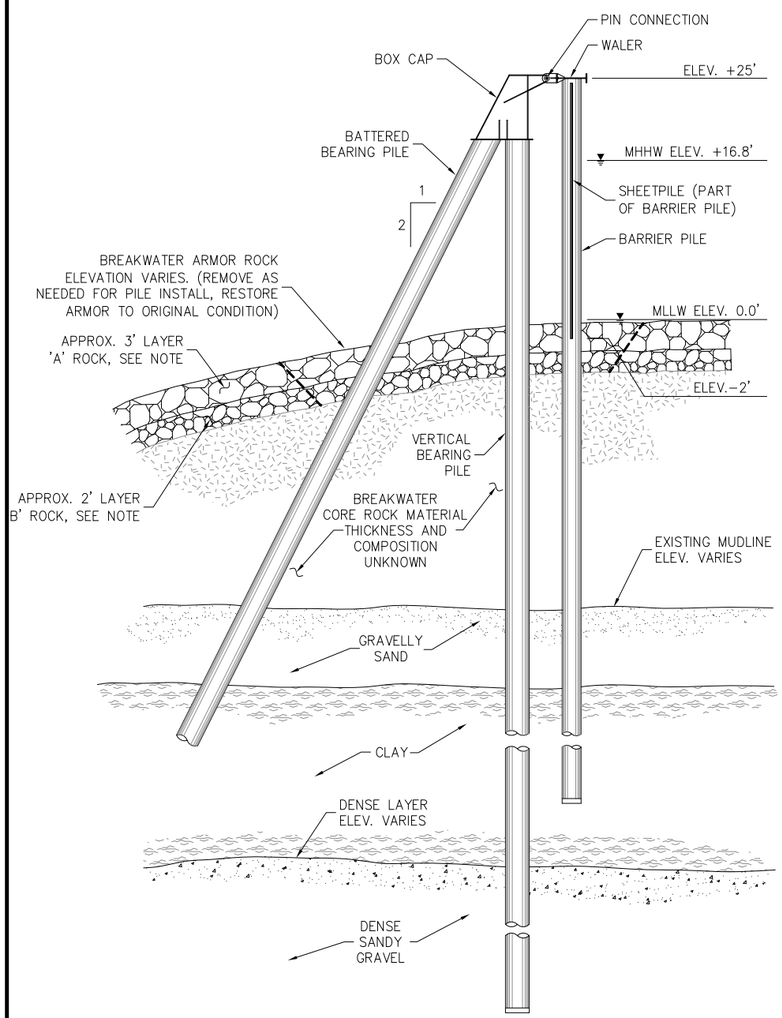

A 3.02 **TYPICAL SECTION**

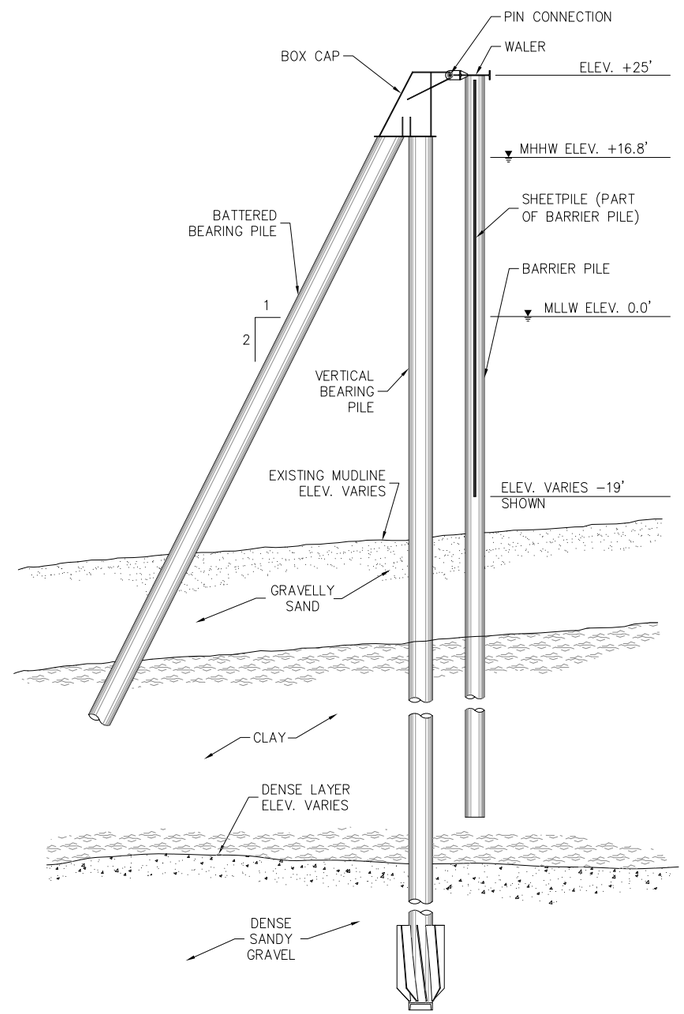

B 3.02 **TYPICAL SECTION**

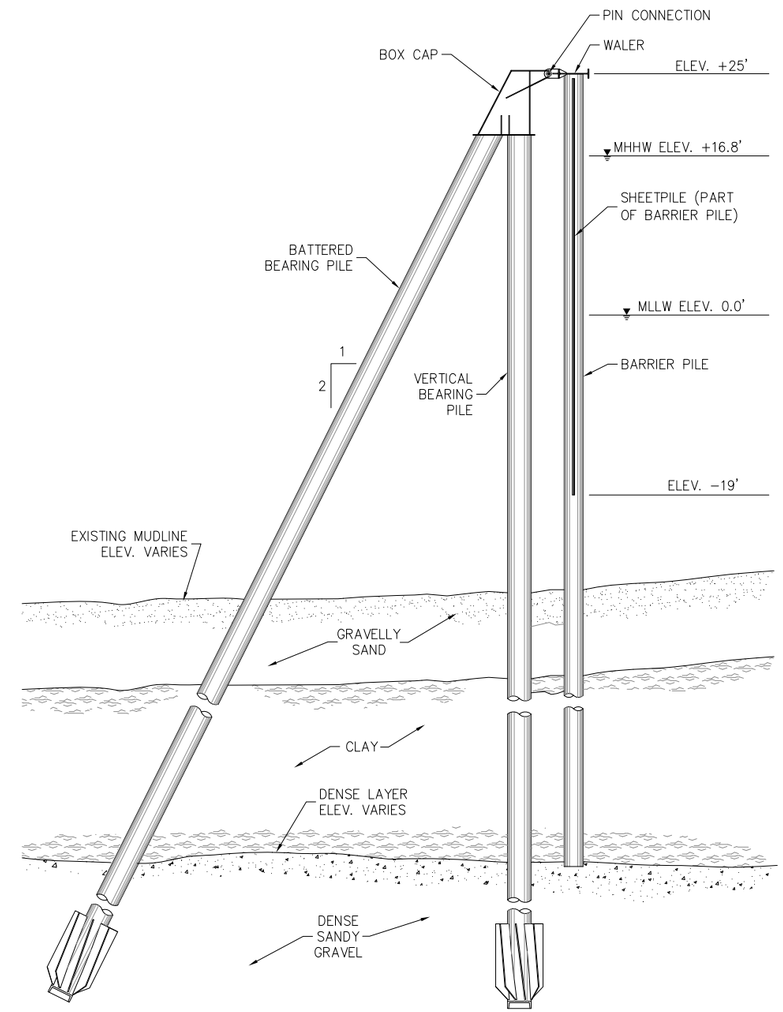

C 3.02 **TYPICAL SECTION**

65% DESIGN REVIEW SUBMITTAL

REVISIONS

REV.	DATE	DESCRIPTION	DWN.	CKD.	APP.

P N D ENGINEERS, INC.
9360 Glacier Highway, Ste. 100
Juneau, Alaska 99801
Phone: 907-586-2093
Fax: 907-586-2099
www.pndengineers.com

DESIGN: JDO CHECKED: CRS
DRAWN: DRH APPROVED:
SCALE: SCALE IN FEET 0 8 16 FT.
DATE: MAR. 2015

HAINES BOROUGH
SOUTH PORTAGE COVE
HARBOR EXPANSION

SHEET TITLE: **TYPICAL SECTIONS**

PN&D PROJECT NO.: 102029.10

5.04
SHEET 17 OF 23

WAVE BARRIER PILE SCHEDULE

Pile Location	Pile Size Diameter x Wall	Approx. Length (ft)	Approx. Length of Bare Pile (ft)	Approx. Length of Sheetpile (ft)	Tip Type	Approx. Tip Elevation (ft)	Design Compression Capacity (Allowable/ Ultimate) (kips)	Comments
1	24"dia x 0.5"t	60	20	20	Cutting Shoe	−35	20/50	PS31 one side of pile only*
2	24"dia x 0.5"t	60	20	23	Cutting Shoe	−35	20/50	PS31 both sides
3	24"dia x 0.5"t	60	20	25	Cutting Shoe	−35	20/50	PS31 both sides
4	24"dia x 0.5"t	70	20	27	Cutting Shoe	−45	20/50	PS31 both sides
5	24"dia x 0.5"t	70	20	32	Cutting Shoe	−45	20/50	PS31 both sides
6	24"dia x 0.5"t	80	40	36	Cutting Shoe	−55	20/50	PS31 both sides
7	24"dia x 0.5"t	80	40	40	Cutting Shoe	−55	20/50	PS31 both sides
8	24"dia x 0.5"t	90	40	42	Cutting Shoe	−65	20/50	PS31 both sides
9	24"dia x 0.5"t	90	40	44	Cutting Shoe	−65	20/50	PS31 both sides
10	24"dia x 0.5"t	90	40	44	Cutting Shoe	−65	20/50	PS31 both sides
11	24"dia x 0.5"t	90	40	44	Cutting Shoe	−65	20/50	PS31 both sides
12	24"dia x 0.5"t	90	40	44	Cutting Shoe	−65	20/50	PS31 both sides
13	24"dia x 0.5"t	90	40	44	None	−65	20/50	PS31 both sides
14	24"dia x 0.5"t	90	40	44	None	−65	20/50	PS31 both sides
15	24"dia x 0.5"t	90	40	44	None	−65	20/50	PS31 both sides
16	24"dia x 0.5"t	90	40	44	None	−65	20/50	PS31 both sides
17	24"dia x 0.5"t	90	40	44	None	−65	20/50	PS31 both sides
18	24"dia x 0.5"t	90	40	44	None	−65	20/50	PS31 both sides
19	24"dia x 0.5"t	90	40	44	None	−65	20/50	PS31 both sides
20	24"dia x 0.5"t	90	40	44	None	−65	20/50	PS31 both sides
21	24"dia x 0.5"t	90	40	44	None	−65	20/50	PS31 both sides
22	24"dia x 0.5"t	90	40	44	None	−65	20/50	PS31 both sides
23	24"dia x 0.5"t	90	40	44	None	−65	20/50	PS31 both sides
24	24"dia x 0.5"t	90	40	44	None	−65	20/50	PS31 both sides
25	24"dia x 0.5"t	90	40	44	None	−65	20/50	PS31 both sides
26	24"dia x 0.5"t	90	40	44	None	−65	20/50	PS31 both sides
27	24"dia x 0.5"t	90	40	44	None	−65	20/50	PS31 both sides
28	24"dia x 0.5"t	90	40	44	None	−65	20/50	PS31 both sides
29	24"dia x 0.5"t	90	40	44	None	−65	20/50	PS31 both sides
30	24"dia x 0.5"t	90	40	44	None	−65	20/50	PS31 both sides
31	24"dia x 0.5"t	90	40	44	None	−65	20/50	PS31 both sides
32	24"dia x 0.5"t	90	40	44	None	−65	20/50	PS31 both sides
33	24"dia x 0.5"t	90	40	44	None	−65	20/50	PS31 both sides
34	24"dia x 0.5"t	90	40	44	None	−65	20/50	PS31 both sides
35	24"dia x 0.5"t	90	40	44	None	−65	20/50	PS31 both sides
36	24"dia x 0.5"t	90	40	44	None	−65	20/50	PS31 both sides
37	24"dia x 0.5"t	90	40	44	None	−65	20/50	PS31 both sides
38	24"dia x 0.5"t	90	40	44	None	−65	20/50	PS31 both sides
39	24"dia x 0.5"t	90	40	44	None	−65	20/50	PS31 both sides
40	24"dia x 0.5"t	90	40	44	None	−65	20/50	PS31 both sides
41	24"dia x 0.5"t	90	40	44	None	−65	20/50	PS31 both sides
42	24"dia x 0.5"t	90	40	44	None	−65	20/50	PS31 both sides
43	24"dia x 0.5"t	90	40	44	None	−65	20/50	PS31 both sides
44	24"dia x 0.5"t	90	40	44	None	−65	20/50	PS31 both sides
45	24"dia x 0.5"t	90	40	44	None	−65	20/50	PS31 both sides
46	24"dia x 0.5"t	90	40	44	None	−65	20/50	PS31 both sides
47	24"dia x 0.5"t	90	40	44	None	−65	20/50	PS31 both sides
48	24"dia x 0.5"t	90	40	44	None	−65	20/50	PS31 both sides
49	24"dia x 0.5"t	90	40	44	None	−65	20/50	PS31 both sides
50	24"dia x 0.5"t	90	40	44	None	−65	20/50	PS31 both sides

* PAY PARTICULAR ATTENTION TO INTERLOCK ORIENTATION

WAVE BARRIER PILE SCHEDULE (Cont.)

Pile Location	Pile Size Diameter x Wall	Approx. Length (ft)	Approx. Length of Bare Pile (ft)	Approx. Length of Sheetpile (ft)	Tip Type	Approx. Tip Elevation (ft)	Design Compression Capacity (Allowable/ Ultimate) (kips)	Comments
51	24"dia x 0.5"t	90	40	44	None	−65	20/50	PS31 both sides
52	24"dia x 0.5"t	90	40	44	None	−65	20/50	PS31 both sides
53	24"dia x 0.5"t	90	40	44	None	−65	20/50	PS31 both sides
54	24"dia x 0.5"t	90	40	44	None	−65	20/50	PS31 both sides
55	24"dia x 0.5"t	90	40	44	None	−65	20/50	PS31 both sides
56	24"dia x 0.5"t	90	40	44	None	−65	20/50	PS31 both sides
57	24"dia x 0.5"t	90	40	44	None	−65	20/50	PS31 both sides
58	24"dia x 0.5"t	90	40	44	None	−65	20/50	PS31 both sides
59	24"dia x 0.5"t	90	40	44	None	−65	20/50	PS31 both sides
60	24"dia x 0.5"t	90	40	44	None	−65	20/50	PS31 both sides
61	24"dia x 0.5"t	90	40	44	None	−65	20/50	PS31 both sides
62	24"dia x 0.5"t	90	40	44	None	−65	20/50	PS31 both sides
63	24"dia x 0.5"t	90	40	44	None	−65	20/50	PS31 both sides
64	24"dia x 0.5"t	90	40	44	None	−65	20/50	PS31 both sides
65	24"dia x 0.5"t	90	40	44	None	−65	20/50	PS31 both sides
66	24"dia x 0.5"t	90	40	44	None	−65	20/50	PS31 both sides
67	24"dia x 0.5"t	90	40	44	None	−65	20/50	PS31 both sides
68	24"dia x 0.5"t	90	40	44	None	−65	20/50	PS31 both sides
69	24"dia x 0.5"t	90	40	44	None	−65	20/50	PS31 both sides
70	24"dia x 0.5"t	90	40	44	None	−65	20/50	PS31 both sides
71	24"dia x 0.5"t	90	40	44	None	−65	20/50	PS31 both sides
72	24"dia x 0.5"t	90	40	44	None	−65	20/50	PS31 both sides
73	24"dia x 0.5"t	90	40	44	None	−65	20/50	PS31 both sides
74	24"dia x 0.5"t	90	40	44	None	−65	20/50	PS31 both sides
75	24"dia x 0.5"t	90	40	44	None	−65	20/50	PS31 both sides
76	24"dia x 0.5"t	90	40	44	None	−65	20/50	PS31 both sides
77	24"dia x 0.5"t	90	40	44	None	−65	20/50	PS31 both sides
78	24"dia x 0.5"t	90	40	44	None	−65	20/50	PS31 both sides
79	24"dia x 0.5"t	90	40	44	None	−65	20/50	PS31 both sides
80	24"dia x 0.5"t	90	40	44	None	−65	20/50	PS31 both sides
81	24"dia x 0.5"t	90	40	44	None	−65	20/50	PS31 both sides
82	24"dia x 0.5"t	90	40	44	None	−65	20/50	PS31 both sides
83	24"dia x 0.5"t	90	40	44	None	−65	20/50	PS31 both sides
84	24"dia x 0.5"t	90	40	44	None	−65	20/50	PS31 both sides
85	24"dia x 0.5"t	90	40	44	None	−65	20/50	PS31 both sides
86	24"dia x 0.5"t	90	40	44	None	−65	20/50	PS31 both sides
87	24"dia x 0.5"t	90	40	44	None	−65	20/50	PS31 both sides
88	24"dia x 0.5"t	90	40	44	None	−65	20/50	PS31 both sides
89	24"dia x 0.5"t	90	40	44	None	−65	20/50	PS31 both sides
90	24"dia x 0.5"t	90	40	44	None	−65	20/50	PS31 both sides
91	24"dia x 0.5"t	90	40	44	None	−65	20/50	PS31 both sides
92	24"dia x 0.5"t	90	40	44	None	−65	20/50	PS31 both sides
93	24"dia x 0.5"t	90	40	44	None	−65	20/50	PS31 both sides
94	24"dia x 0.5"t	90	40	44	None	−65	20/50	PS31 both sides
95	24"dia x 0.5"t	90	40	44	None	−65	20/50	PS31 both sides
96	24"dia x 0.5"t	90	40	44	None	−65	20/50	PS31 both sides
97	24"dia x 0.5"t	90	40	44	None	−65	20/50	PS31 both sides
98	24"dia x 0.5"t	90	40	44	None	−65	20/50	PS31 both sides
99	24"dia x 0.5"t	90	40	44	None	−65	20/50	PS31 both sides
100	24"dia x 0.5"t	90	40	44	None	−65	20/50	PS31 both sides

65% DESIGN REVIEW SUBMITTAL

HAINES BOROUGH ALASKA

REVISIONS

REV.	DATE	DESCRIPTION	DWN.	CKD.	APP.

P N D ENGINEERS, INC.
9360 Glacier Highway, Ste. 100
Juneau, Alaska 99801
Phone: 907-586-2093
Fax: 907-586-2099
www.pndengineers.com

DESIGN: JDO CHECKED: CRS
DRAWN: DRH APPROVED:
SCALE:
DATE: MAR. 2015

HAINES BOROUGH
SOUTH PORTAGE COVE
HARBOR EXPANSION

SHEET TITLE:
PILE SCHEDULE

PN&D PROJECT NO.: 102029.10

5.05
SHEET 18 OF 23

WAVE BARRIER PILE SCHEDULE (Cont.)								
Pile Location	Pile Size Diameter x Wall	Approx. Length (ft)	Approx. Length of Bare Pile (ft)	Approx. Length of Sheetpile (ft)	Tip Type	Approx. Tip Elevation (ft)	Design Compression Capacity (Allowable/ Ultimate) (kips)	Comments
101	24"dia x 0.5"t	90	40	44	None	−65	20/50	PS31 both sides
102	24"dia x 0.5"t	90	40	44	None	−65	20/50	PS31 both sides
103	24"dia x 0.5"t	90	40	44	None	−65	20/50	PS31 both sides
104	24"dia x 0.5"t	90	40	44	None	−65	20/50	PS31 both sides
105	24"dia x 0.5"t	90	40	44	None	−65	20/50	PS31 both sides
106	24"dia x 0.5"t	90	40	44	None	−65	20/50	PS31 both sides
107	24"dia x 0.5"t	90	40	44	None	−65	20/50	PS31 both sides
108	24"dia x 0.5"t	90	40	44	None	−65	20/50	PS31 both sides
109	24"dia x 0.5"t	90	40	44	None	−65	20/50	PS31 both sides
110	24"dia x 0.5"t	90	40	44	None	−65	20/50	PS31 both sides
111	24"dia x 0.5"t	90	40	44	None	−65	20/50	PS31 both sides
112	24"dia x 0.5"t	90	40	44	None	−65	20/50	PS31 both sides
113	24"dia x 0.5"t	90	40	44	None	−65	20/50	PS31 both sides
114	24"dia x 0.5"t	90	40	44	None	−65	20/50	PS31 both sides
115	24"dia x 0.5"t	90	40	44	None	−65	20/50	PS31 both sides
116	24"dia x 0.5"t	90	40	44	None	−65	20/50	PS31 both sides
117	24"dia x 0.5"t	90	40	44	None	−65	20/50	PS31 both sides
118	24"dia x 0.5"t	90	40	44	None	−65	20/50	PS31 both sides
119	24"dia x 0.5"t	90	40	44	None	−65	20/50	PS31 both sides
120	24"dia x 0.5"t	90	40	44	None	−65	20/50	PS31 both sides
121	24"dia x 0.5"t	90	40	44	None	−65	20/50	PS31 both sides
122	24"dia x 0.5"t	90	40	44	None	−65	20/50	PS31 both sides
123	24"dia x 0.5"t	90	40	44	None	−65	20/50	PS31 both sides
124	24"dia x 0.5"t	90	40	44	None	−65	20/50	PS31 both sides
125	24"dia x 0.5"t	90	40	44	None	−65	20/50	PS31 both sides
126	24"dia x 0.5"t	90	40	44	None	−65	20/50	PS31 both sides
127	24"dia x 0.5"t	90	40	44	None	−65	20/50	PS31 both sides
128	24"dia x 0.5"t	90	40	44	None	−65	20/50	PS31 both sides
129	24"dia x 0.5"t	90	40	44	None	−65	20/50	PS31 both sides
130	24"dia x 0.5"t	90	40	44	None	−65	20/50	PS31 both sides
131	24"dia x 0.5"t	90	40	44	None	−65	20/50	PS31 one side of pile only*

* PAY PARTICULAR ATTENTION TO INTERLOCK ORIENTATION

BEARING PILE SCHEDULE							
Pile Location	Pile Batter	Pile Size Diameter x Wall	Approx. Length (ft)	Approx. Length of Bare Pile (ft)	Tip Type	Capacity (Allowable/Ultimate) (kips)	
						Compression	Tension
BC−1	Vertical	30"dia x 3/4"t	160	80	Cutting Shoe Only		
	2:1	30"dia x 3/4"t	200	100	Cutting Shoe Only		
BC−2	Vertical	30"dia x 3/4"t	160	80	SPIN FIN® Tip		
	2:1	30"dia x 3/4"t	200	100	SPIN FIN® Tip		
BC−3	Vertical	30"dia x 3/4"t	160	80	SPIN FIN® Tip		
	2:1	30"dia x 3/4"t	200	100	SPIN FIN® Tip		
BC−4	Vertical	30"dia x 3/4"t	160	80	SPIN FIN® Tip		
	2:1	30"dia x 3/4"t	200	100	SPIN FIN® Tip		
BC−5	Vertical	30"dia x 3/4"t	160	80	SPIN FIN® Tip		
	2:1	30"dia x 3/4"t	200	100	SPIN FIN® Tip		
BC−6	Vertical	30"dia x 3/4"t	160	80	SPIN FIN® Tip		
	2:1	30"dia x 3/4"t	200	100	SPIN FIN® Tip		
BC−7	Vertical	30"dia x 3/4"t	160	80	SPIN FIN® Tip		
	2:1	30"dia x 3/4"t	200	100	SPIN FIN® Tip		
BC−8	Vertical	30"dia x 3/4"t	160	80	SPIN FIN® Tip		
	2:1	30"dia x 3/4"t	200	100	SPIN FIN® Tip		
BC−9	Vertical	30"dia x 3/4"t	160	80	SPIN FIN® Tip		
	2:1	30"dia x 3/4"t	200	100	SPIN FIN® Tip		
BC−10	Vertical	30"dia x 3/4"t	160	80	SPIN FIN® Tip		
	2:1	30"dia x 3/4"t	200	100	SPIN FIN® Tip		
BC−11	Vertical	30"dia x 3/4"t	160	80	SPIN FIN® Tip		
	2:1	30"dia x 3/4"t	200	100	SPIN FIN® Tip		
BC−12	Vertical	30"dia x 3/4"t	160	80	SPIN FIN® Tip		
	2:1	30"dia x 3/4"t	200	100	SPIN FIN® Tip		
BC−13	Vertical	30"dia x 3/4"t	160	80	SPIN FIN® Tip		
	2:1	30"dia x 3/4"t	200	100	SPIN FIN® Tip		
BC−14	Vertical	30"dia x 3/4"t	160	80	SPIN FIN® Tip		
	2:1	30"dia x 3/4"t	200	100	SPIN FIN® Tip		
BC−15	Vertical	30"dia x 3/4"t	160	80	SPIN FIN® Tip		
	2:1	30"dia x 3/4"t	200	100	SPIN FIN® Tip		
BC−16	Vertical	30"dia x 3/4"t	160	80	SPIN FIN® Tip		
	2:1	30"dia x 3/4"t	200	100	SPIN FIN® Tip		
BC−17	Vertical	30"dia x 3/4"t	160	80	SPIN FIN® Tip		
	2:1	30"dia x 3/4"t	200	100	SPIN FIN® Tip		
BC−18	Vertical	30"dia x 3/4"t	160	80	SPIN FIN® Tip		
	2:1	30"dia x 3/4"t	200	100	SPIN FIN® Tip		
BC−19	Vertical	30"dia x 3/4"t	160	80	SPIN FIN® Tip		
	2:1	30"dia x 3/4"t	200	100	SPIN FIN® Tip		
BC−20	Vertical	30"dia x 3/4"t	160	80	SPIN FIN® Tip		
	2:1	30"dia x 3/4"t	200	100	SPIN FIN® Tip		
BC−21	Vertical	30"dia x 3/4"t	160	80	SPIN FIN® Tip		
	2:1	30"dia x 3/4"t	200	100	SPIN FIN® Tip		
BC−22	Vertical	30"dia x 3/4"t	160	80	SPIN FIN® Tip		
	2:1	30"dia x 3/4"t	200	100	SPIN FIN® Tip		

65% DESIGN REVIEW SUBMITTAL

HAINES BOROUGH ALASKA

SPIN FIN® PILE IS A REGISTERED TRADEMARK OF PND ENGINEERS, INC.

REVISIONS

REV.	DATE	DESCRIPTION	DWN.	CKD.	APP.

PND ENGINEERS, INC.
9360 Glacier Highway, Ste. 100
Juneau, Alaska 99801
Phone: 907-586-2093
Fax: 907-586-2099
www.pndengineers.com

DESIGN: JDO CHECKED: CRS
DRAWN: DRH APPROVED:
SCALE:
DATE: MAR. 2015

HAINES BOROUGH
SOUTH PORTAGE COVE
HARBOR EXPANSION

SHEET TITLE:
PILE SCHEDULE

PN&D PROJECT NO.: 102029.10

5.06

SHEET 19 OF 23

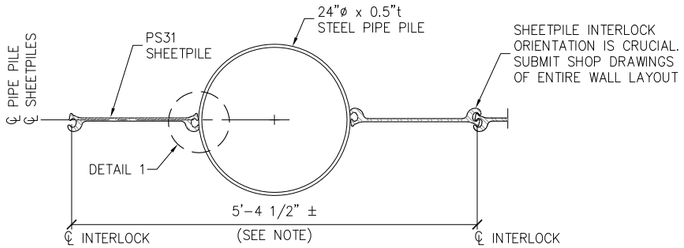

TYPICAL BARRIER PILE

NOTE:
IF DIMENSION VARIES SUBSTANTIALLY FROM THIS ESTIMATE DUE TO FIT-UP OF PROPOSED SHEETPILE, ADDITIONAL BARRIER PILES AND SHEETPILE MAY BE REQUIRED TO OBTAIN OVERALL DESIRED LENGTH OF WAVE BARRIER SHOWN.

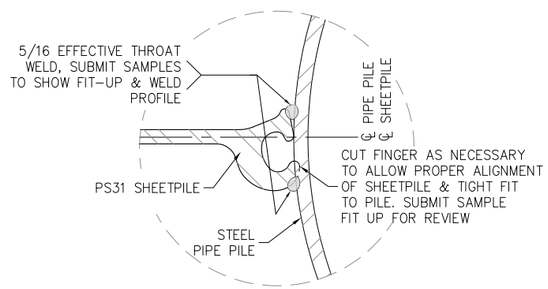

DETAIL 1

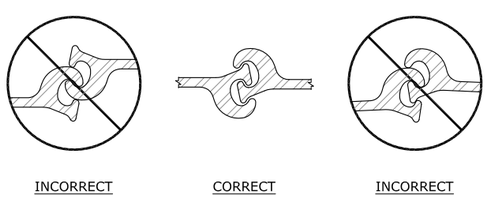

SHEETPILE INTERLOCK DETAILS

NOTE: ORIENTATION OF INTERLOCKS IS CRITICAL, VIEW SHOWN FROM TOP.

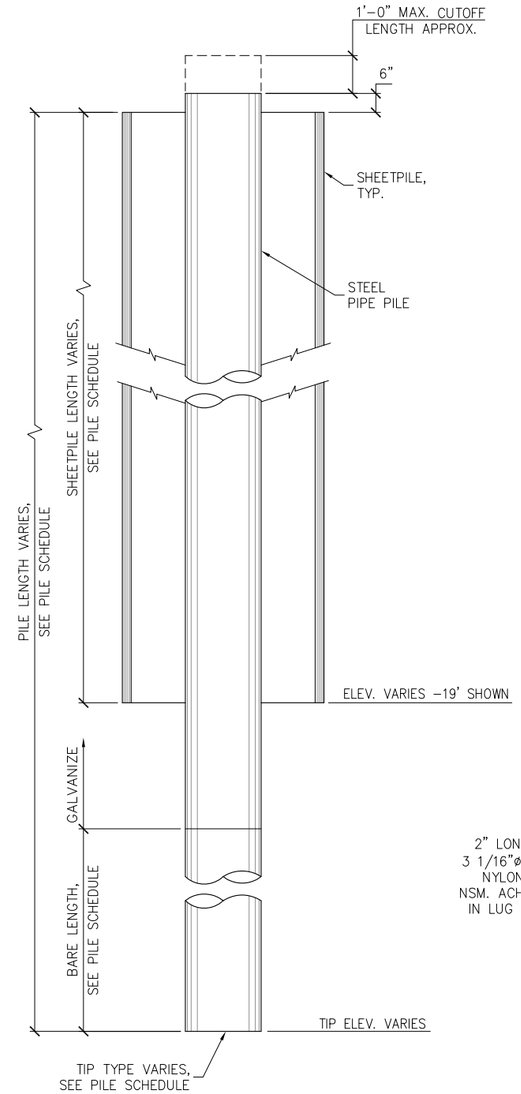

TYPICAL WAVE BARRIER PILE

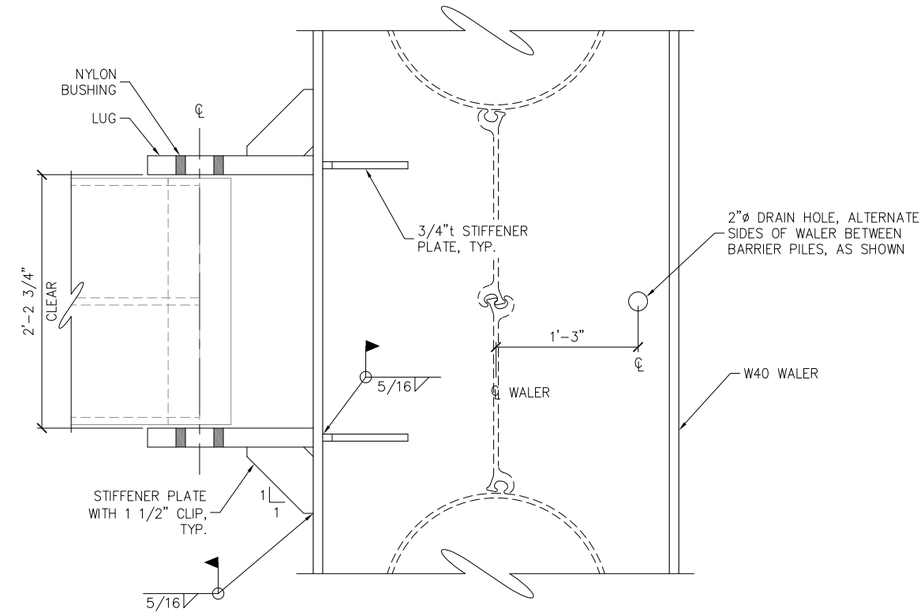

PLAN

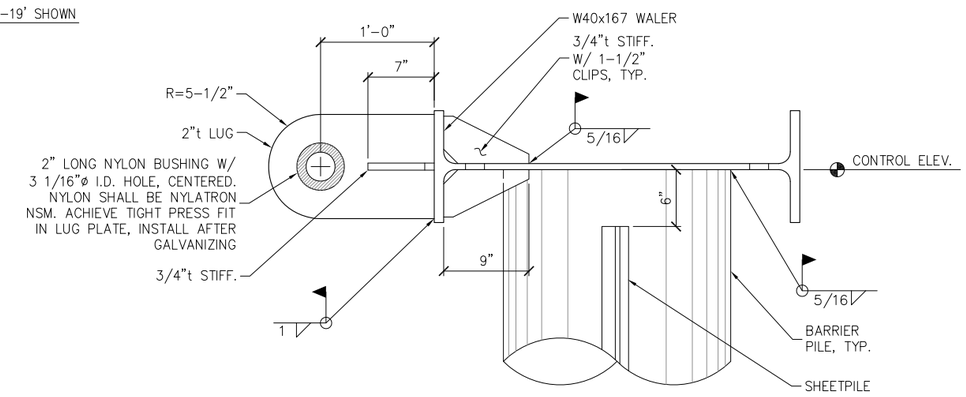

ELEVATION

WALER DETAILS

65% DESIGN REVIEW SUBMITTAL

REVISIONS

REV.	DATE	DESCRIPTION	DWN.	CKD.	APP.

P N D ENGINEERS, INC.
9360 Glacier Highway, Ste. 100
Juneau, Alaska 99801
Phone: 907-586-2093
Fax: 907-586-2099
www.pndengineers.com

DESIGN: JDO CHECKED: CRS
DRAWN: DRH APPROVED:
SCALE:
DATE: MAR. 2015

HAINES BOROUGH
SOUTH PORTAGE COVE
HARBOR EXPANSION

SHEET TITLE:
BARRIER PILES AND WALERS

PN&D PROJECT NO.: 102029.10

5.07
SHEET 20 OF 23

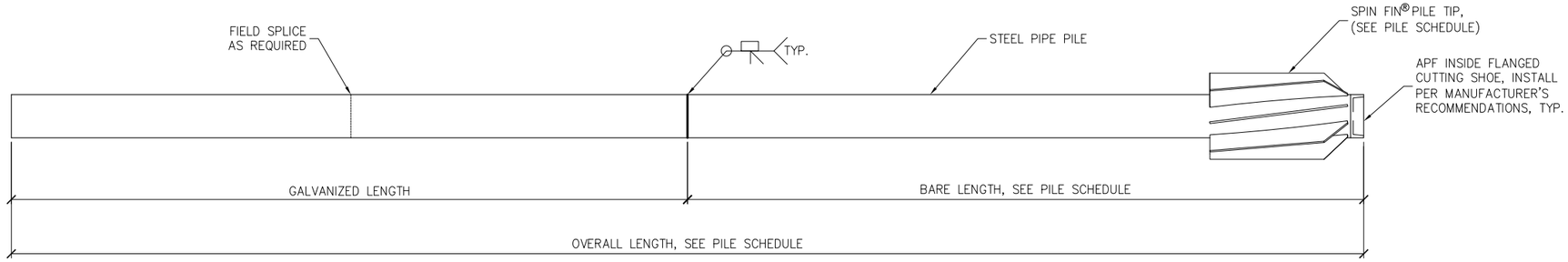

BEARING PILE
NTS

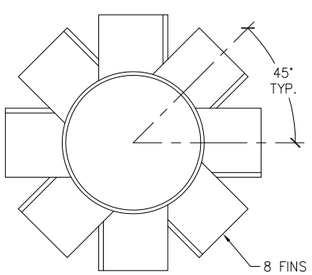

PLAN

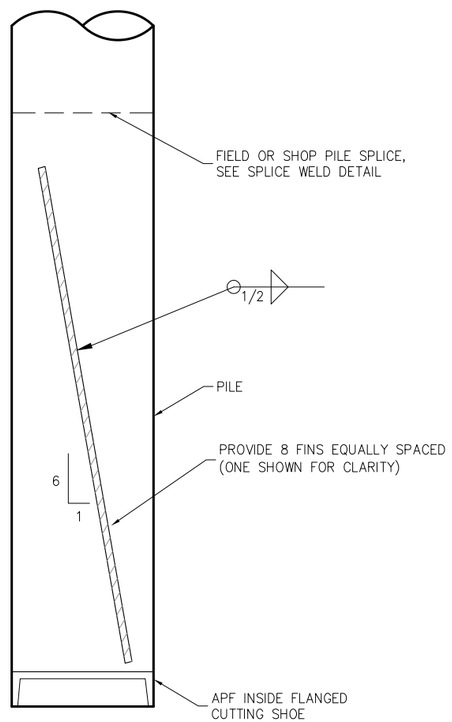

ELEVATION

SPIN FIN® PILE
NTS

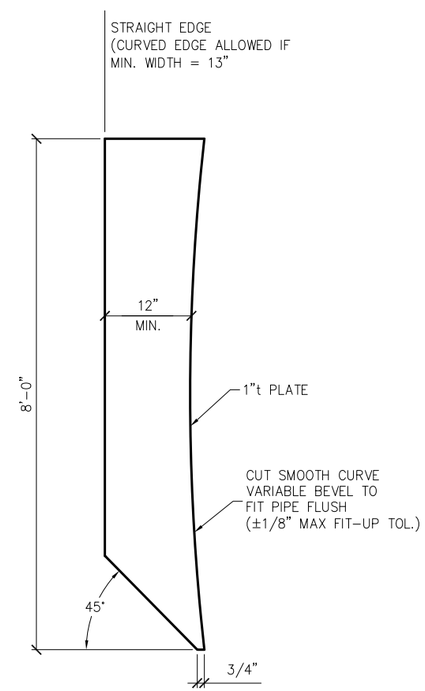

SPIN FIN®
NTS

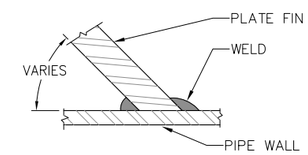

PILE/FIN SECTION
NTS

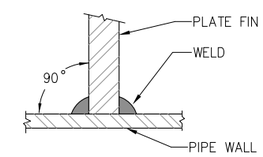

PILE/FIN SECTION AT CENTERLINE OF PLATE
NTS

65% DESIGN REVIEW SUBMITTAL

SPIN FIN® PILE IS A REGISTERED TRADEMARK OF PND ENGINEERS, INC.

REVISIONS

REV.	DATE	DESCRIPTION	DWN.	CKD.	APP.

PND ENGINEERS, INC.
9360 Glacier Highway, Ste. 100
Juneau, Alaska 99801
Phone: 907-586-2093
Fax: 907-586-2099
www.pndengineers.com

DESIGN: JDO CHECKED: CRS
DRAWN: DRH APPROVED:
SCALE:
DATE: MAR. 2015

HAINES BOROUGH
SOUTH PORTAGE COVE
HARBOR EXPANSION

SHEET TITLE:
BEARING PILE DETAILS

PN&D PROJECT NO.: 102029.10

5.08
SHEET 21 OF 23

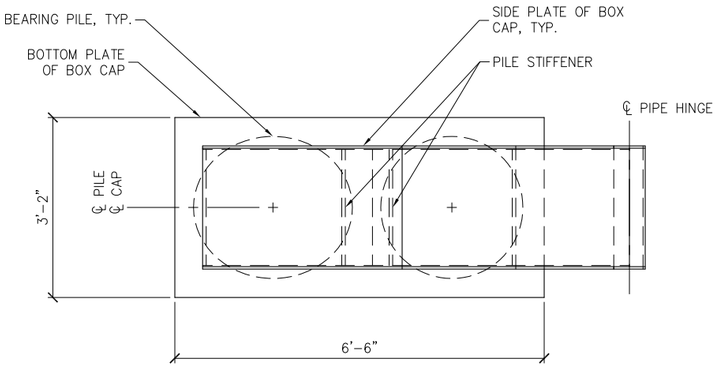

PLAN

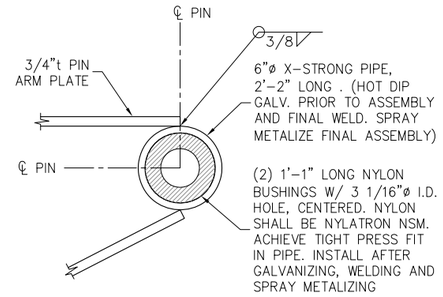

DETAIL

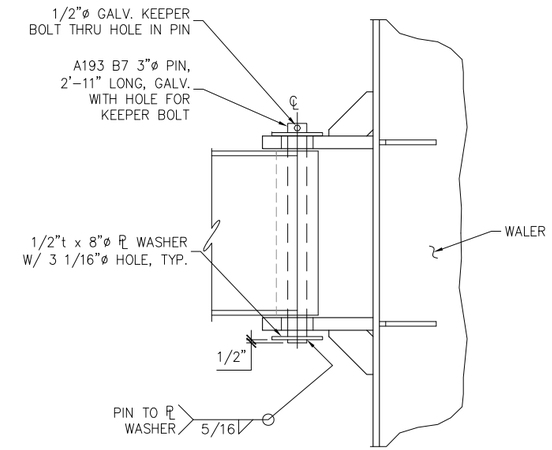

PIN CONNECTION PLAN

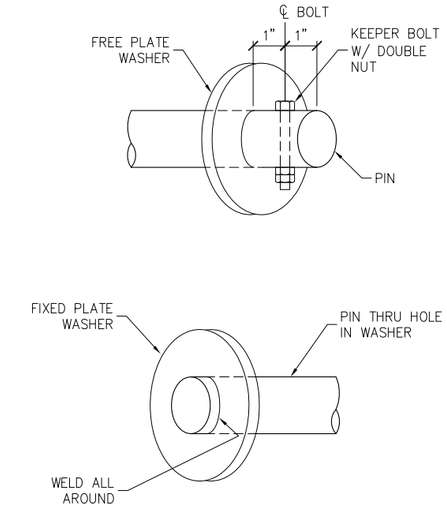

PIN CONNECTION DETAILS

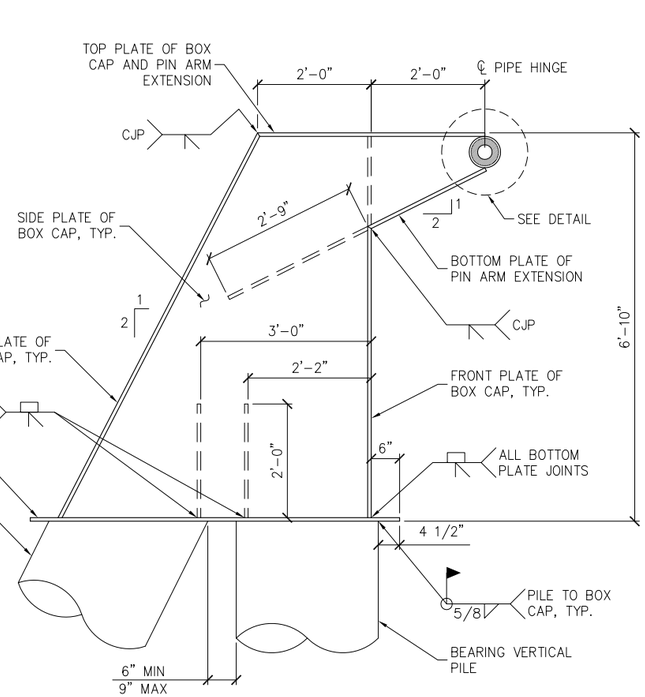

SIDE ELEVATION

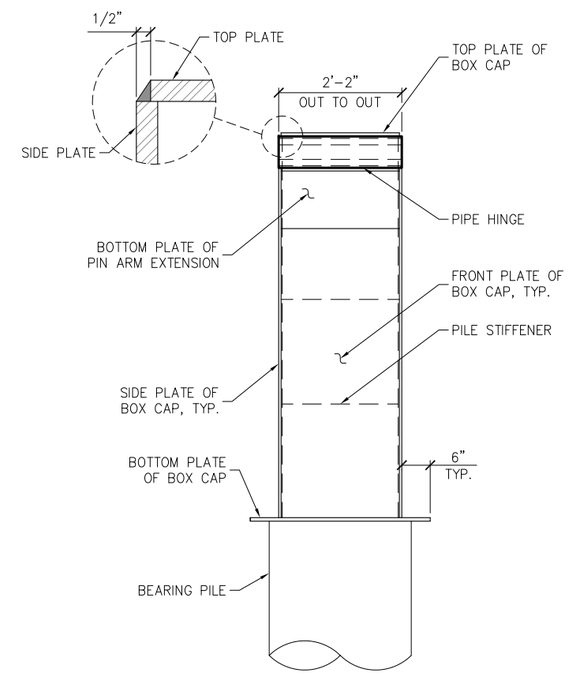

FRONT ELEVATION

BOX CAP

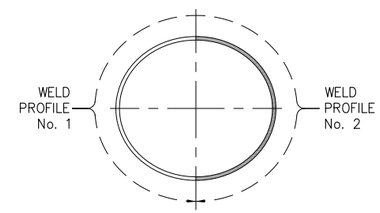

PLAN

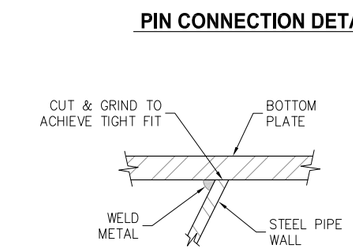

No 1 WELD PROFILE

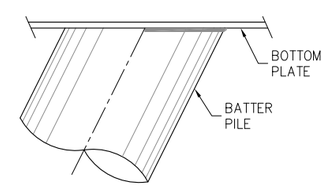

SIDE VIEW

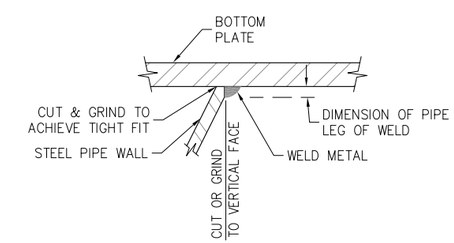

No 2 WELD PROFILE

BATTER PILE WELD
(ALL BATTER PILES)

NOTE:
1. ALL PLATE IS 3/4"t UNLESS OTHERWISE NOTED.
2. ALL OTHER WELDS ON BOX CAP NOT SHOWN SHALL BE 1/2" FILLET OR EQUIVALENT BEVEL, ALL AROUND

65% DESIGN REVIEW SUBMITTAL

REVISIONS

REV.	DATE	DESCRIPTION	DWN.	CKD.	APP.

PND ENGINEERS, INC.
9360 Glacier Highway, Ste. 100
Juneau, Alaska 99801
Phone: 907-586-2093
Fax: 907-586-2099
www.pndengineers.com

DESIGN: JDO CHECKED: CRS
DRAWN: DRH APPROVED:
SCALE:
DATE: MAR. 2015

HAINES BOROUGH SOUTH PORTAGE COVE HARBOR EXPANSION

SHEET TITLE: **BOX CAP DETAILS**

PN&D PROJECT NO.: 102029.10

SHEET 22 OF 23

5.09

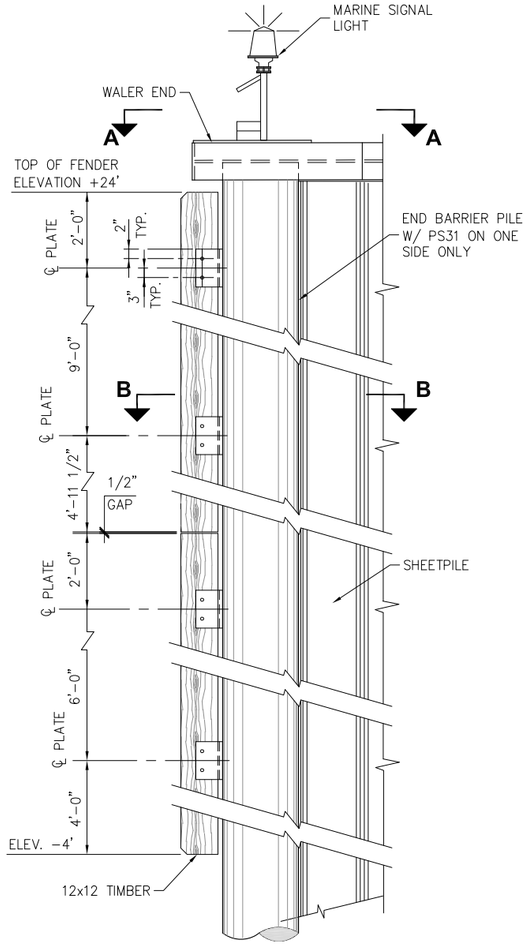

PARTIAL ELEVATION

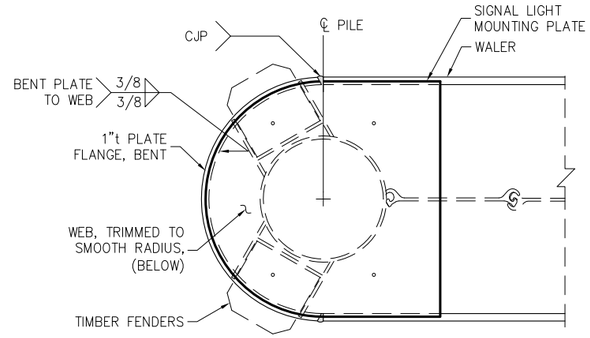

VIEW A-A

END CAP AT SOUTH END OF WAVE BARRIER

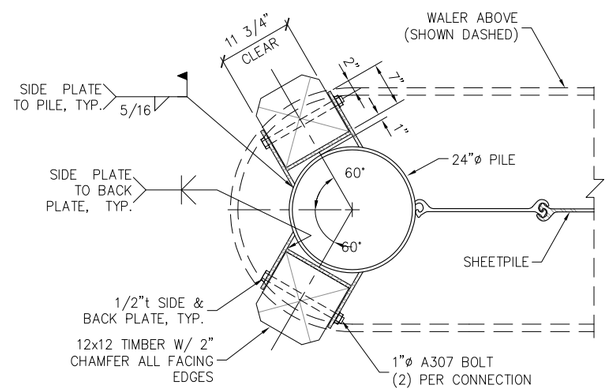

VIEW B-B

END CAP AT SOUTH END OF WAVE BARRIER

FENDER

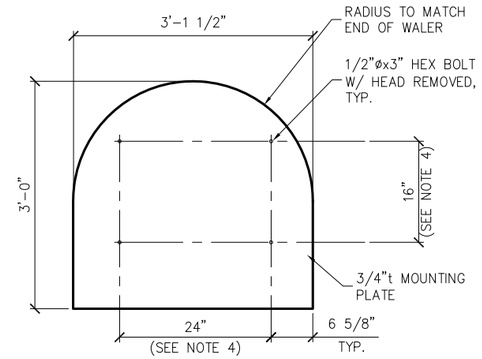

PLAN

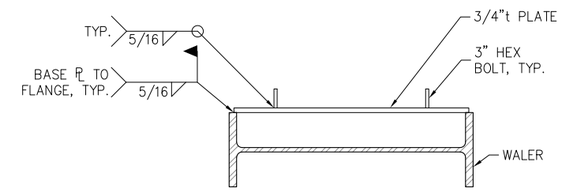

SECTION

SIGNAL LIGHT MOUNTING PLATE

MARINE SIGNAL LIGHT

SIGNAL LIGHT NOTES:

1) ALL METALS AND HARDWARE SHALL BE HOT DIP GALVANIZED PER ASTM A123 OR A153 AS APPROPRIATE.
2) BOLTS SHALL BE ASTM A325. STEEL PLATE SHALL BE A MINIMUM ASTM A36.
3) TIDELAND SIGNAL CORP. SOLA-CHAN MARINE SIGNAL LIGHT. ML-155 ON 4' PEDESTAL WITH 10W SOLAR MODULE OR APPROVED EQUAL , INCLUDING ON 12V SECONDARY ENERGY CELL AND MAXIFALO-60 LED FLASHER SET AT 0.4 SEC. "ON" AND 3.6 SEC. "OFF" (15 FLASHES/MINUTE) VISIBLE FOR MIN. 2 NM. COLOR AND FLASH PATTERN PER US COAST GUARD PERMIT REQUIREMENTS.
4) CENTER MARINE SIGNAL LIGHT ON BASE PLATE. CONTRACTOR TO VERIFY BOLT PATTERN AND SPACING ON LIGHT BASE.
5) ORIENT SOLAR PANEL FACING SOUTH.

65% DESIGN REVIEW SUBMITTAL

REVISIONS

REV.	DATE	DESCRIPTION	DWN.	CKD.	APP.

PND ENGINEERS, INC.
9360 Glacier Highway, Ste. 100
Juneau, Alaska 99801
Phone: 907-586-2093
Fax: 907-586-2099
www.pndengineers.com

DESIGN: JDO CHECKED: CRS
DRAWN: DRH APPROVED:
SCALE:
DATE: MAR. 2015

HAINES BOROUGH SOUTH PORTAGE COVE HARBOR EXPANSION

SHEET TITLE: **FENDER AND MARINE SIGNAL LIGHT**

PN&D PROJECT NO.: 102029.10

5.10

SHEET 23 OF 23