RFP INFORMATION PACKET

KLEHINI VALLEY FIRE HALL UPGRADES
Issue Date: July 18, 2012

Contact:
Office of the Borough Clerk
Haines Borough
103 Third Ave. S
P.O. Box 1209, Haines, AK 99827
907-766-2231 x31
FAX - 907-766-2716
jcozzi@haines.ak.us

Bid Deadline: 12:00pm, Wednesday, August 1, 2012

REQUEST FOR BIDS
KLEHINI VALLEY FIRE HALL UPGRADES
Issue Date: July 18, 2012

PURPOSE:
The Haines Borough is soliciting sealed bids from qualified and licensed contractors to provide roofing and door upgrades to the Klehini Valley Volunteer Fire Department (KVVFD) located on the Mosquito Lake Road at 26 Mile, Haines Cutoff Highway. Bids will be accepted until 12:00 noon Local Time, Wednesday, August 1, 2012 at the Haines Borough Administrative Offices in Haines, Alaska, at which time they will be opened.

DESCRIPTION OF WORK:
1. Removal and replacement of two (2) 14'-2" x 14' high overhead sectional doors.
    a. Remove two existing overhead doors, tracks and hardware at the East side of the fire hall facing the street.
    b. Install two new 14'-2" x 14' high insulated overhead doors, hardware and operators as specified in the RFP Information Packet. Doors are to be tested and adjusted for smooth operation and weathertight seal.
    c. Electrical connections for the remote control station and sensor devices will be done under a separate contract and are not part of this work.
2. Removal and replacement of approximately 5400 SF metal roofing (entire building). Length of roofing panels is approximately 27 feet. Roof pitch is 4:12. Roof height at eaves is 16 feet.
    a. Remove existing metal roofing and roof flashing from the building and the site.
    b. Install new through-fastened structural metal roofing and flashings, including those at roof penetrations, as specified in the RFP Information Packet.
    c. Replace existing roof insulation that is missing, damaged and/or exhibiting signs of mold or water saturation with new insulation of like kind and performance.
    d. Install new factory precut, dual-layer fiberglass insulation and vapor retarder between accessible roof purlins and beneath existing insulation (roof only).

CONTRACTOR RESPONSIBILITIES:
1. Bids are to include the complete removal from the site of the existing doors, roofing and any construction debris resulting from performance of the work as described above. Such items become the property of the contractor to salvage or dispose of in an approved manner and location.
2. All labor, materials and delivery required for a complete, safe and functional installation in accordance with the intent of the Description of Work and Specifications shall be provided, whether specifically called out or not.
3. Contractor shall warrant the completed installation for labor and materials for a period of five (5) years.

4. Contractor is responsible for information that pertains to the means, methods, techniques, sequences, and procedures of construction and for the coordination of the work of all trades.
5. Verify all relevant existing conditions prior to offering bid or commencing work. The Haines Borough encourages interested bidders to visit the KVVFD to verify any dimensions critical to this installation.
6. Existing insulation and the building interior is to be protected from weather and other damage during construction.

CONTRACT CONDITIONS

- **PRODUCT**: All Plans, original drawings, electronic files, specifications, reports, photographs, and other documents relative to a project which the respondent prepares or causes to be prepared in connection with services performed shall be delivered to and become the property of the Borough.
- **INSURANCE**: The professional services provider to whom a contract is awarded may be required to furnish to the borough evidence of insurance coverage(s) including general liability, professional liability, and workers compensation insurance, as appropriate.
- **INSURANCE NOT LIMITING CONTRACTOR'S LIABILITY**: The provisions of this contract requiring insurance shall not limit the liability of the Contractor or anyone acting on behalf of the Contractor.
- **INDEMNITY**: Contractor agrees to defend, indemnify and hold the Borough harmless from any and all claims, demands or liability for bodily injury or death of any person, or damage to property arising out of the Contractor's execution of the contractual duties of the Contractor, its agents, employees or assigns.
- **DAMAGE TO BUILDINGS OR EQUIPMENT**: Any problems, including building or equipment damage, caused by or discovered by the Contractor during the execution of the contractual duties of the Contractor should be reported immediately.
- **COMPLIANCE WITH LAWS**: The Contractor and all persons acting on behalf of the Contractor shall comply with all applicable laws and regulations of Federal, State or Local government agencies with respect to the activities of the Contractor or anyone acting on behalf of the Contractor.
- **LIENS AND ASSESSMENTS**: The Contractor agrees that it will pay all employment security contributions required to be paid as a result of any services performed for the Borough regardless of whether they are performed by the Contractor or someone engaged by the Contractor. The Contractor shall not allow any lien to be placed against the Borough by reason of non-payment of such contributions or any other reason, and shall indemnify the Borough against any such lien.
- **EXPENSES AND ATTORNEY'S FEES UPON DEFAULT**: Contractor agrees to pay all actual costs, expenses and actual attorney's fees incurred by the Borough upon an Event of Default.
- **DEFAULT**: The Contractor shall be declared in default of the contract if the Contractor fails to adequately perform the contract services. If, in the opinion of the Borough, the Contractor's services do not adequately fulfill the intent of the contract, the Borough Clerk shall notify the Contractor in writing of service deficiencies. If the Contractor fails to correct such deficiencies within ten days of receiving this written notice, or consistently fails to provide adequate services

as documented in writing by the Borough, the contractor shall be in default of the contract and the Borough shall terminate the contract.

- **BILLING/PAYMENT**: Requests for payment for performed services shall be submitted to the Borough and will be processed for payment at the time of the next accounts payable check run.

An RFP packet including instructions, forms, specs, and drawings is available from the Borough Clerk's Office:

Attn: Julie Cozzi, MMC, Borough Clerk
103 Third Ave / P.O. Box 1209
Haines, AK 99827
Phone: 907-766-2231 ext.31
Email: jcozzi@haines.ak.us
Online at www.hainesalaska.gov

To examine the Klehini Valley Fire Hall interior at Mosquito Lake, contact:

Fire Department Phone: 907-767-5550 or,
Robert Clay, Fire Chief: 907-767-5406

REQUEST FOR BIDS INFORMATION:		**SUBMIT BIDS TO:**	
Project Title	Klehini Valley Fire Hall Upgrades	Physical Address:	Haines Borough Administration Office 103 Third Ave S. Haines, Alaska
Date Issued:	July 18, 2012		
Contact Person:	Brian Lemcke		
Tel:	907-766-2257		
Fax:	907-766-2256		
Email Addresses:	blemcke@haines.ak.us	Mailing Address:	Haines Borough Attn: Borough Clerk PO Box 1209 Haines, AK 99827
RFP Website:	http://www.hainesalaska.gov/rfps		
Bid Deadline:	August 1, 2012 @ 12:00 noon		

PROJECT SCHEDULE. The Haines Borough anticipates the following project schedule:

Request for Bids (Advertisement dates)	July 18, and July 26, 2012
Receive and open bids	August 1, 12:00 noon Local Time
Borough Assembly Authorization	August 14, 2012
Notice of Intent to Award	August 15, 2012
Notice to Proceed	August 20, 2012 (approximate)
Project Completion	October 15, 2012

REQUIRED SUBMITTALS:
Return one signed copy of the following Bid Form in a sealed envelope clearly labeled as "KV FIRE HALL UPGRADES." The following documents must be attached to the bid form at the time of submission:

All contract bids must contain:
A. Non-Collusion Affidavit
B. Copies of a current Alaska business license and a borough business license;
C. Copy of an Alaska contractor's certificate of registration, if appropriate;
D. Acknowledgement of all addenda;
E. A bid bond of at least five percent of the amount of the bid or a certified check drawn to the Haines Borough in like amount. Checks and bid bonds will be returned to unsuccessful bidders.

HAINES BOROUGH
KLEHINI VALLEY FIRE HALL UPGRADES
BID FORM

Bid of _____ (hereinafter called *Bidder*), doing business as (underline one) a corporation, partnership or individual, to the Haines Borough (hereinafter called *Borough*). The Bidder agrees to furnish to the Haines Borough all information and data that may be requested to give evidence that the undersigned is properly qualified to carry out the obligations of the Contract Documents.

The undersigned Bidder agrees, if this bid is accepted, to complete the work required under the Request for Bids by August 1, 2012 and to accept as full payment the Contract Price stated on this Bid Form, and in the manner stipulated by the Request for Bids, subject to any negotiated changes in the work that might increase or decrease the contract amount. The Borough reserves the right to reject any and all bids and negotiate with the responsible bidder submitting the lowest bid amount.

Bidder accepts all of the terms and conditions of the Request for Bids and, if this bid is accepted, will furnish the following documents required by borough code for this project:

1. *Contract document or Agreement;*
2. *[Proof of insurance: general liability, auto insurance, worker's compensation];*
3. *Any overdue unpaid debts owed the borough must be current prior to award; and*
4. *Subcontractor report, if applicable.*

Bidder acknowledges receipt of the following addenda:

Addendum No._____ Initials:_____ Addendum No._____ Initials:_____

BIDDER INFORMATION:

Principal Contact: _____

Business Name: _____

Haines Borough Business License No: _____

Business Physical Address: _____

Business Mailing Address, if different: _____

Phone: _____ Fax: _____ Email:_____

_____
Bidder's Authorized Signature

_____ _____
Printed Name Date

Bidder proposes to furnish all tools, equipment, supplies, manufactured articles, labor, materials, services and incidentals, and to perform all work necessary for the Completion of the Project as shown and specified in strict accordance with the Contract Documents by October 15, 2012.

BASE BID:

Item No.	Quantity	Pay Item	Unit Price	Base Bid Total
1.	Lump Sum (LS)	Klehini Valley Volunteer Fire Department Fire Hall Upgrades	N/A	$
_____ Per LS Written Lump Sum				

Haines Borough
KLEHINI VALLEY FIRE HALL UPGRADES

NON-COLLUSION AFFIDAVIT

UNITED STATES OF AMERICA)

STATE OF ALASKA)

I,_____ of _____

_____, being duly sworn, so depose and state:

That I, or the firm, association or corporation of which I am a member, a BIDDER on the contract to be awarded, by the Assembly of the HAINES BOROUGH for the contract services designated as:

KLEHINI VALLEY FIRE HALL UPGRADES

Located in Haines, Alaska, have not, either or indirectly, entered into any agreement, participate in any collusion, or otherwise taken any action in restraint of free competitive bidding in connection with such contract.

Subscribed and sworn to this ___ day of _____, 2012.

Notary Public_____

My Commission Expires:_____

HAINES BOROUGH
KLEHINI VALLEY FIRE HALL UPGRADES
BID BOND

KNOW ALL MEN BY THESE PRESENTS, that we, the undersigned

_____ as Principal and

_____ as Surety,

are hereby held and firmly bound unto the HAINES BOROUGH, as OWNER, in the penal sum of _____ Dollars ($_____) for the payment of which, well and truly to be made, we hereby jointly and severally bind ourselves, our heirs, executors, administrators, successors and assigns.

Signed this _____ day of _____**, 2012**.

The condition of the above obligation is such that whereas the Principal has submitted to the HAINES BOROUGH, ALASKA a certain BID, attached hereto and hereby made a part hereof to enter into a contract in writing, for: **KLEHINI VALLEY FIRE HALL UPGRADES**

NOW, THEREFORE

(a) If said BID shall be rejected, or

(b) If said BID shall be accepted and the Principal shall

execute and deliver a contract in the Form of Contract attachment hereto (properly completed in accordance with said BID) and shall furnish a BOND for faithful performance of said contract, and for the payment of all persons performing labor furnishing materials or equipment in connection therewith, and shall in all other respects perform the agreement created by the acceptance of said BID, then this obligation shall be void, otherwise the same shall remain in force and effect; it being expressly understood and agreed that the liability of the Surety of any and all claims hereunder shall in no event, exceed the penal amount of this obligation as herein stated.

The Surety, for value received, hereby stipulates and agrees that the obligations of said Surety and its BOND shall be in no way impaired or affected by an extension of the time within which the OWNER may accept such BID; and said Surety does hereby waive notice of any such extension.

IN WITNESS WHEREOF, the Principal and the Surety have hereunto set their hands and seals, and such of them as are corporations have caused their corporate seals to be hereto affixed and these presents to be signed by their proper officers, and day and year first set forth above. *Note: Surety companies executing BONDS must appear on the Treasury Department's most current list and be authorized to transact business in Alaska.*

_____
Principal

(SEAL) BY:_____

_____
Surety

(SEAL) BY:_____

KLEHINI VALLEY FIRE HALL UPGRADES
Issue Date: July 18, 2012

Contents

Overhead Door Specifications…… 4 Pages

Overhead Door Order Form…… 2 Pages

Overhead Door Installation Instructions…… 32 Pages

Overhead Door Supplemental Instructions, Commercial Doors…… 2 Pages

Roofing Specifications…… 4 Pages

Roofing Installation, Flashings & Details Guide…… 31 Pages

Dual Layer Insulation Retrofit Order Form…… 2 Pages

Guide to Preventing Condensation in Metal Buildings…… 4 Pages

Photos of Existing Fire Hall……2 Pages

(More photos of the existing fire hall building are available at www.hainesalaska.gov)

SECTION 08360

OVERHEAD DOORS

PART 1 GENERAL

1.1 SECTION INCLUDES

A. Sectional overhead doors of the following types:
   1. Flush steel doors, thermally-broken, polystyrene insulated. (Model 3220)
   2. Electric door operators

1.2 SUBMITTALS

A. Manufacturer's data sheets on each product to be used, including:
   1. Preparation instructions and recommendations.
   2. Storage and handling requirements and recommendations.
   3. Installation methods.
   4. Operation and maintenance data.
   5. Nameplate data and ratings for motors.

B. Shop Drawings: Include opening dimensions and required tolerances, connection details, anchorage spacing, hardware locations, and installation details.

1.3 WARRANTY

A. Finish Warranty: Provide manufacturer's standard finish warranty against rust through.
   1. Warranty period: 10 years.

B. Delamination Warranty: Provide manufacturer's standard warranty against delamination.
   1. Warranty period: 10 years.

PART 2 PRODUCTS

2.1 MANUFACTURERS

A. Acceptable Manufacturer: Clopay Building Products Company, which is located at: 8585 Duke Blvd. ASD; Mason, OH 45040-3101; Toll Free Tel: 800-526-4301 prompt #3; Fax: 888-434-3193; Email: CIA@clopay.com Web: www.clopaycommercial.com

B. Requests for substitutions will be considered by The Haines Borough Public Facilities Director.

2.2 FLUSH STEEL DOORS, THERMALLY-BROKEN, POLYSTYRENE INSULATED

A. Door Construction:
   1. Panels: Sandwich construction of exterior and interior steel skins pressure bonded to an expanded core, with skins separated by a continuous silicone filling forming a thermal break.
   2. Steel Skins: Formed from roll formed commercial or drawing quality steel sheet, hot-dip galvanized per ASTM A 924/A 924M and ASTM A 653/A 653M, pre-painted with primer and baked-on polyester topcoat; sections formed to create weather tight tongue-in-groove meeting joint, unless otherwise

specified.

3. Reinforcing: Galvanized and primed steel reinforcement located under each hinge location, pre-punched for hinge attachment.
4. Handle: High impact polymer step plate/lift handle on bottom panel section.

B. Premium Duty Door: Clopay Model 3220.
1. Door Size: 14 ft, 2 inches wide by 14 ft. high (Verify on Site).
2. Overall Panel Thickness: 2 inches (51 mm).
3. Steel Skin Thickness: Minimum 20 gauge 0.034 inch (0.86 mm) exterior; minimum 28 gauge 0.015 inch (0.38 mm) interior.
4. Stiles: Steel prepainted end stiles, minimum 0.049 inch (1.25 mm) thick, engineered for easy hardware attachment through prepunched holes.
5. Bottom panel section reinforced with continuous 0.050 inch (1.27 mm) aluminum astragal retainer with U-shaped flexible PVC astragal.
6. Thermal Resistance (R-value): 9.1 deg F hr sq ft/Btu (1.6 (K sq m)/W); calculated door section R-value in accordance with DASMA TDS-163.
7. Windows: Extruded polypropylene windows measuring 8 inches by 24 inches (200 mm by 600 mm).
   a. Glazing: 1 inch nominal (25 mm) insulated tempered glass.
   b. Location: 4 windows at section 2 (from bottom) of 7 section door.
8. Finish: Stucco embossed texture, white interior, exterior as follows:
   a. White.
9. Locking: Inside spring loaded slide bolt lock on end stile that engages slot in track.
   a. Provide one inside slide lock.
10. Weatherstripping: Provide complete perimeter seals. Provide flexible top seal, flexible jamb seal and U shaped bottom seal.
11. Tracks: Vertical tracks minimum 0.061 inch (1.55 mm) galvanized steel tapered and mounted for wedge type closing. Horizontal tracks minimum 0.075 inch (1.91 mm) galvanized steel, reinforced with minimum 0.0897 inch (2.28 mm) galvanized steel angles as required:
   a. Track Width: Determined by Manufacturer.
   b. Provide standard lift tracks with 15 inches (381 mm) radius track as indicated.

12. Spring Counterbalance: Torsion spring counterbalance mechanism sized to weight of the door, with a helically wound, oil tempered torsion spring mounted on a steel shaft; cable drum of die cast aluminum with high strength galvanized aircraft cable with minimum 7 to 1 safety factor.
   a. Standard Cycle Spring: 10,000 cycle.

2.3 ELECTRIC DOOR OPERATORS

A. General: Provide electric door operator provided by door manufacturer for door with operational life specified complete with electric motor and factory pre-wired motor controls, starter, gear-reduction unit, clutch, remote-control stations, control devices, integral gearing for locking door, and accessories required for proper operation. Comply with NFPA 70.

B. Disconnect Device: Provide hand-operated disconnect or mechanism for emergency manual operation while disconnecting motor, without affecting timing of limit switch. Mount disconnect and operator so they are accessible from floor level. Include interlock device to automatically prevent motor from operating when emergency operator is engaged.

C. Design operator so motor may be removed without disturbing limit switch adjustment and without affecting emergency auxiliary operator.

D. Provide control equipment complying with NEMA ICS1, NEMA ICS 2, and NEMA ICS 6, with NFPA 70 Class 2 control circuit, maximum 24-V, AC or DC.

E. Electric Motors: Provide high-starting torque, reversible, continuous-duty, Class A insulated, electric motor, complying with NEMA MG 1, with overload protection, sized to start, accelerate, and operate door in either direction, from any position, at not less than 2/3 fps (0.2 m/s) and not more than 1 fps (.03m/s), without exceeding nameplate ratings or considering service factor.

a. 3/4hp (559 W) T-7511

2. Coordinate wiring requirements and electrical characteristics of motors with building electrical system.

F. Remote Control Station: Provide momentary contact, 3-button control station with push - button controls labeled "Open", "Close" and "Stop".

G. Obstruction Detection Device: Provide each motorized door with indicated external automatic safety sensor able to protect full width of door opening. Activation of sensor immediately stops and reverses downward door travel.

1. Sensor Edge: Provide each motorized door with an automatic safety sensing edge, located within astragal or weather stripping mounted to bottom bar. Contact with sensor immediately stops and reverses downward door travel. Connect to control circuit using manufacturer's standard take-up reel or self-coiling cord.
2. Photo-electric control: Provide each motorized door with a photo-electric device that will stop and reverse the downward door travel if the light beam is broken or blocked. Device shall be:

H. Limit Switches: Provide adjustable switches, interlocked with motor controls and set to automatically stop door at fully opened and fully closed positions.

I. Radio Controls: Provide 3 button radio transmitter to provide remote open, close, stop functionality.

1. Provide external antenna and coaxial wiring to receiver to enhance radio control reception.

PART 3 EXECUTION

3.1 EXAMINATION

A. Examine wall and overhead areas, including opening framing and blocking, with installer present, for compliance with requirements for installation tolerances, clearances, and other conditions affecting performance of Work in this Section.

1. Proceed with installation only after unsatisfactory conditions have been corrected.

3.2 PREPARATION

A. Prepare surfaces using the methods recommended by the manufacturer for achieving the best result for the substrate under the project conditions.

3.3 INSTALLATION

A. Install overhead doors and track in accordance with approved shop drawings and the manufacturer's printed instructions.

3.4 PROTECTION

A. Protect installed products until completion of project.

B. Touch-up, repair or replace damaged products before Substantial Completion.

END OF SECTION

MODEL #: 3220

SECTION TYPE:
TONGUE & GROOVE

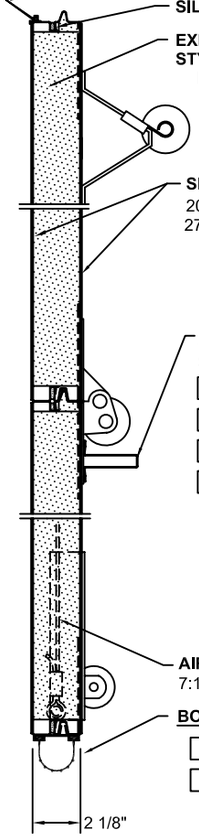

VINYL TOP SEAL:
- ☐ YES (OPTION)
- ☐ NO

SILICONE THERMAL BREAK:

EXPANDED POLY-STYRENE INSULATION:
R=9.1

SKIN MATERIAL:
20 GA. PRE-PAINTED FLUSH EXTERIOR
27 GA. PRE-PAINTED WHITE INTERIOR FLUSH

REINFORCING STRUTS:
SEE TABLE #4
- ☐ NONE
- ☐ 2 1/4" STRUT
- ☐ 3" STRUT
- ☐ 4" C-CHANNEL

AIRCRAFT CABLE:
7:1 SAFETY FACTOR

BOTTOM ASTRAGAL:
- ☐ 3 1/2" (STANDARD)
- ☐ 7" (OPTIONAL)

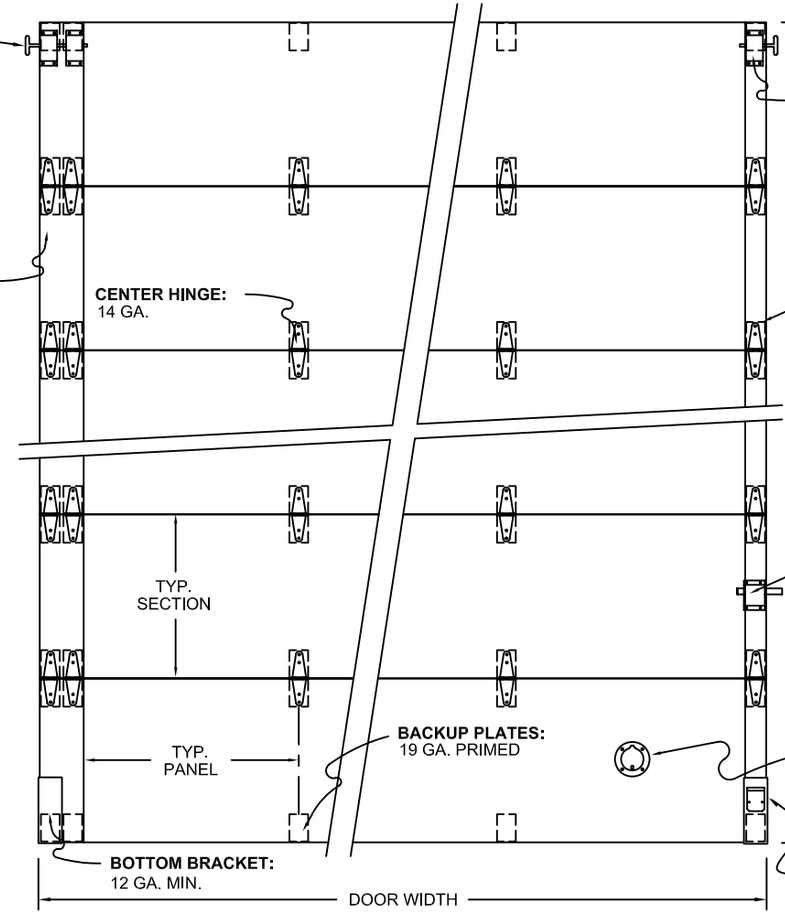

END STILES: (PRE-PAINTED)
- ☐ 18 GA. SINGLE END STILES (THRU 14'2" WIDE)
- ☐ 16 GA. DOUBLE END STILES (OVER 14'2" WIDE)

EXTERIOR COLOR:
- ☐ WHITE
- ☐ BROWN

LOCK:
- ☐ #2 END STILE
- ☐ #7 CYLINDER LOCK - NOT AVAILABLE IN FULL-VISION SECTION
- ☐ NONE

EXHAUST PORT:
- ☐ LEFT
- ☐ RIGHT
- ☐ CENTER
- ☐ NONE

GLAZING OPTIONS:
SEE TABLE #3
- ☐ 24" x 8"
- ☐ 28" x 14"
- ☐ 40" x 14"
- ☐ SOLID
- ☐ FULL VISION

FULL-VISION GLAZING:
- ☐ 1/8" DSB
- ☐ 1/8" PLEXIGLASS
- ☐ 1/4" TEMPERED
- ☐ 1/2" INSULATED
- ☐ 1/2" INSULATED TEMPERED

FULL-VISION SECTIONS THRU 20'2" WIDE

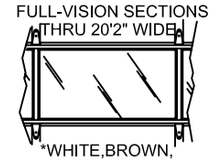

*WHITE,BROWN, AND CLEAR ONLY.

NOTE: FULL-VISION SECTION AVAILABLE FOR ALL SECTION EXCEPT BOTTOM

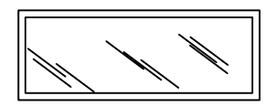

WINDOW FRAME CONSIST OF AN EXTERIOR FRAME AND AN INTERIOR RETAINER, MADE OF CELLULAR PVC EXTRUSIONS

GLAZING OPTIONS:
- ☐ 1/8" DSB
- ☐ 1/8" PLEXIGLASS
- ☐ 3/4" INSULATED

Clopay BUILDING PRODUCTS COMPANY

CUST:	MODEL #:	QTY:	# OF SECTIONS HIGH (SEE TABLE #1)	SECTIONS TO GLAZE:	SHEET'M-5R'
JOB:	DOOR WIDTH:				DATE:
ARCH:			# OF PANELS WIDE (SEE TABLE #2)	PANELS TO GLAZE:	BID #:
CONT:	DOOR HEIGHT:				PAGE ____ of ____

REV. DECEMBER 2011

MODEL # 3220

TABLE #1
SECTION CHART

DOOR HEIGHT	NUMBER OF SECTIONS
6'0"	3
6'3" - 8'0"	4
8'3" - 10'0"	5
10'3" - 12'0"	6
12'3" - 14'0"	7
14'3" - 16'0"	8
16'3" - 18'0"	9
18'3" - 20'0"	10
20'3" - 24'0"	11
24'3" - 26'0"	12

NOTE: DOOR HEIGHT IS AVAILABLE IN 3" INCREMENTS

TABLE #2
PANEL CHART

DOOR WIDTH	NUMBER OF PANELS
7'0" - 9'2	2
9'4" - 13'2"	3
13'4" - 16'2"	4
16'4" - 20'2"	5
20'4" - 24'2"	6
24'4" - 26'2"	7

NOTE: DOOR WIDTH IS AVAILABLE IN 2" INCREMENTS

TABLE #3
LITE AVAILABILITY CHART

WINDOW SIZE	DOOR WIDTH	LITES PER SECTION
24" x 8"	7'0" - 9'2"	2
	9'4" - 13'2"	3
	13'4" - 16'2"	4
	16'4" - 20'2"	5
	20'4" - 24'2"	6
	24'3" - 26'2"	7
	26'3" - 28'2"	8
28" x 14"	8'0" - 9'2"	2
	9'4" - 13'2"	3
	13'4" - 16'2"	4
40" x 14"	8'0" - 9'2"	2
	9'4" - 11'0"	1 (CENTER PANEL)
	11'2" - 13'2"	3
	13'4" - 15'2"	2 (CENTER PANEL)
	15'4" - 16'2"	4

MAX ALLOWABLE WINDOW SECTIONS PER DOOR
28 X 14 = 4 SECTIONS
40 X 14 = 5 SECTIONS

TABLE #4B
REINFORCEMENT CHART

	DOOR HEIGHT					
DOOR WIDTH	UP to 8'	8'3" to 10'3"	10'3" to 14'	14'3" to 18'	18'3" to 22'	22'3" to 26'
UP TO 15'2"	NONE	NONE	NONE	NONE	NONE	NONE
15'4"- 17'2"	(3) 2-1/4" Struts per Door	(3) 2-1/4" Struts per Door	(4) 2-1/4" Struts per Door	(5) 2-1/4" Struts per Door	(6) 2-1/4" Struts per Door	(7) 2-1/4" Struts per Door
17'4"- 18'2"	(3) 2-1/4" Struts per Door	(1) 2-1/4" Strut per sec	(1) 2-1/4" Strut per sec	(1) 2-1/4" Strut per sec	(1) 2-1/4" Strut per sec w/(2) on bottom sec	(1) 2-1/4" Strut per sec w/(2) on bottom sec
18'4"- 23'2"	(1) 3" Strut per sec	(1) 3" Strut per sec	(1) 3" Strut per sec	(1) 3" Strut per sec	(1) 3" Strut per sec w/(2) on bottom sec	(1) 3" Strut per sec w/(2) on bottom sec
23'4"- 26'2"	(1) 4" CC per sec	(1) 4" CC per sec	(1) 4" CC per sec	(1) 4" CC per sec	(1) 4" CC per sec	(1) 4" CC per sec
26'4"- 28'2"	(1) 6" CC per sec	(1) 6" CC per sec	(1) 6" CC per sec	(1) 6" CC per sec	(1) 6" CC per sec	(1) 6" CC per sec

* FOR FULL VISION SECTION REINFORCEMENT SEE MODEL 903.
* CC = C-CHANNEL

Clopay
BUILDING PRODUCTS COMPANY

INSTALLATION & MAINTENANCE
Commercial & Industrial Sectional Doors

Model: _____ Serial No. _____
(Provided on label on interior door surface)

Size: _____

Retain This Booklet For Future Reference

This Manual Contains Important Safety Information

Clopay® BUILDING PRODUCTS
A Griffon Company

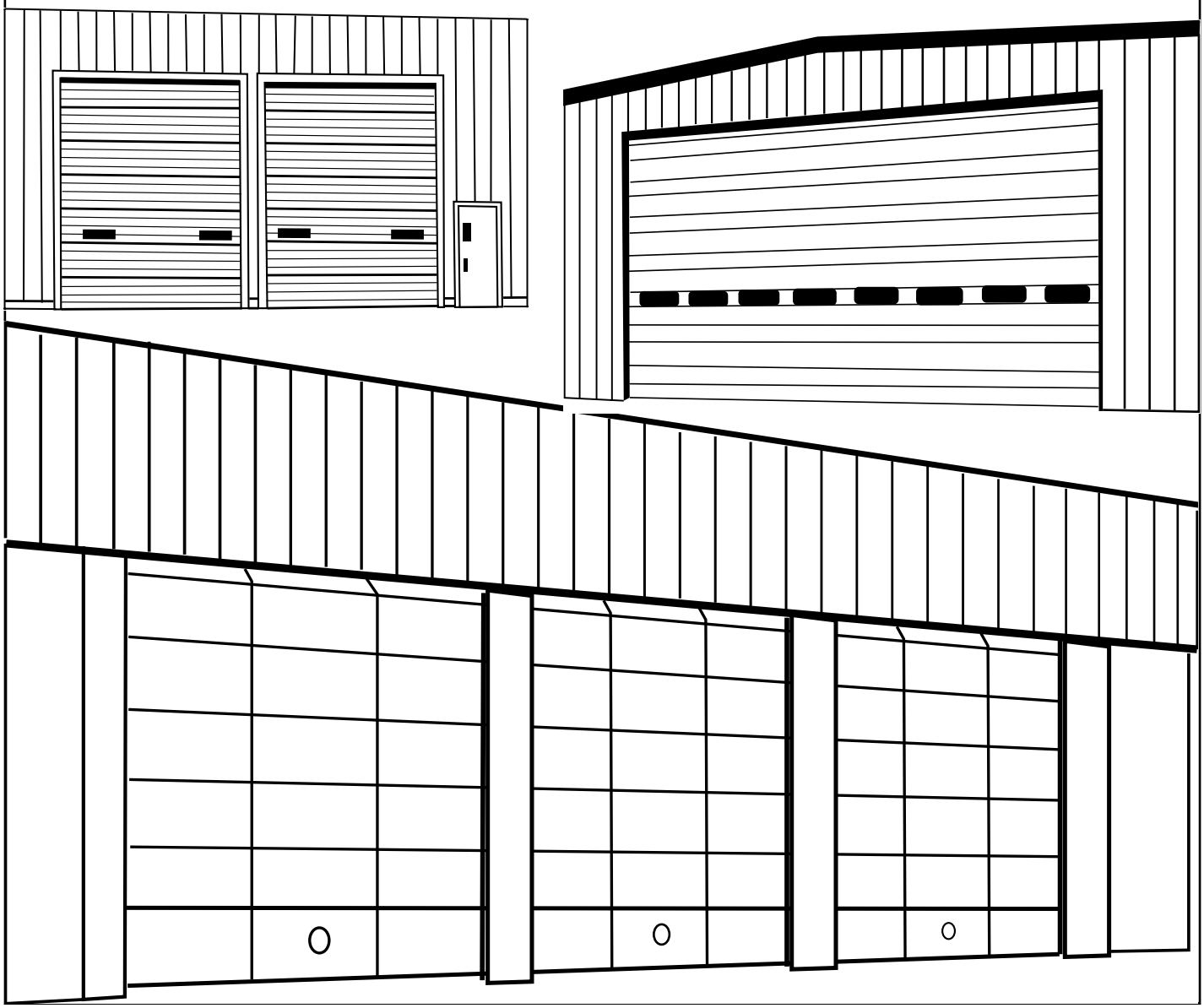

COMMERCIAL HOTLINE • 1-800-526-4301

Dear Clopay Customer,

Thank you for purchasing a Clopay Garage Door. Your new Clopay Garage Door was built to meet the highest industry standard and to provide you with years of dependable performance.

This manual contains important safety, installation and maintenance instructions. Carefully follow the instructions and maintenance recommendations. Please keep this manual for future reference.

If you should require any assistance or additional information, please call Clopay at 1-800-526-4301.

Thank you again for choosing Clopay!

Sincerely,
Clopay Building Products Company

Clopay®
America's Favorite Garage D

Table of Contents

Introduction and Opening Preparation

Safety Information 3-4
Things to Know Before You Begin 5
Removing the Existing Door 6
Preparing the Opening 6

Installing the New Door

Preparing and Installing Door Sections 8
C-Channel Attachment (Non-Windload Doors Only) 10
Lock Installation 12
Track Installation 15
- Standard Radius 17
- Roof Pitch 23
- Low Headroom Rear Mount 24
- Low Headroom Front Mount 26
- Vertical Lift 27
- High Lift 28

Spring Installation 18
Spring Winding 19

Maintenance/Adjustments/Options

Final Adjustment and Maintenance 22
Attaching an Automatic Opener 29
Painting and Windows 30
Quick Turn Bracket 31
Pass Door Instructions 31

SAFETY INFORMATION

I M P O R T A N T !

To Protect Yourself From Injury, Carefully Read The Following Safety Information And Warnings Before You Install Or Attempt To Repair Your New Garage Door

- You can install your new garage door yourself IF…
  1. you have help (weight can vary from 150 lbs. [70 kg] up to 2,000 lbs. [900 kg]);
  2. you have the right tools and reasonable mechanical aptitude or experience; and
  3. you follow these instructions very carefully.

  In particular, please note that:

- Garage doors use springs to balance them. Generally, there are two types of springs used — **extension springs and torsion springs. If your old door uses torsion springs, do not attempt to remove the door or the springs yourself.** Have a qualified door repair service remove them. Attempting to remove a torsion spring assembly and/or any red-colored fasteners without proper training or tools may result in an uncontrolled release of spring forces which can cause serious or fatal injury.

- The brackets at the bottom corners of your garage door are under great tension. **Do not attempt to loosen any bracket fasteners** and/or any red-colored fasteners except when and as directed in detail in the following instructions. Otherwise, the bracket could spring out with dangerous force.

- When installing a door with torsion springs, always use solid steel winding bars. Winding bars are available from many professional door installers. **The use of screwdrivers or any substitutes for winding bars will risk severe injury.** See page 19 for further **safety instructions regarding winding bars.**

- Keep hands and fingers clear of section joints, track, and other door parts when the door is opening and closing to avoid injury. The lift handle and pull down rope are located for safe operation as well as easy use.

- **Extension spring doors must never be operated without a properly installed spring containment cable.**

- Bolts must be installed at the rear end of horizontal tracks. These act to stop the rollers and keep the door from rolling off the back of the track.

- **Only the track and hardware specified and supplied with the door should be used.**

- Express warranties apply only to doors installed using original, factory-supplied sections, parts, and hardware installed in strict accordance with these instructions.

SAFETY INFORMATION

IMPORTANT!

To Protect Yourself From Injury Carefully Read The Following Safety Information And Warnings Before You Install Or Attempt To Repair Your New Garage Door

- Track installations must use sway braces on the rear track hangers to prevent sideways movement. If the tracks are not firmly stabilized they might spread, allowing the door to fall and cause severe injury and damage.

- The center torsion spring assembly uses a wooden pad (2" x 6" x 12" [51 mm x 152 mm x 305 mm] minimum) minor steel plates (¼" thick x 10" x 12" [6mm x 254 mm x 305 mm] minimum) that **must be of good quality and firmly attached to the wall.** Four ⅜" x 3" [10 mm x 76 mm] lag screws should be used to attach wood structure. The wood needs to be made of a Grade 2 or better Southern Yellow Pine (also known as Southern Pine or Yellow Pine.) **DO NOT** use wood labeled as Spruce-Pine-Fir (or SPF). Four ⅜" [10 mm] masonry anchors can be used on concrete or block walls. If the wood splits once the torsion spring is in place, it should be replaced by a professional installer. **Do not try to remove or repair a torsion spring assembly or any red-colored fasteners once it is wound.**

- Springs, cables, and bottom fixtures are under strong spring tension. **Do not attempt to loosen any fasteners on these components.** You could suddenly release spring forces and risk severe injury.

- If the garage door and/or any of the supporting track are damaged, operating the door could be hazardous. Call an authorized representative of the manufacturer or professional door repair service promptly.

- **Do not permit children to play beneath or with any garage door or electric operating controls.**

- If repairs are ever required to your door, safety and trouble-free operation can be best assured by using original replacement parts.

- Once you have completed the installation of your new garage door, please be sure that your garage complies with all applicable ventilation requirements before you enclose any vehicles in the garage. Good ventilation avoids fire and health hazards caused by fumes accumulating within a well-sealed garage.

- Clopay Building Products Company disclaims all liability for any installation which is not in compliance with applicable state, county, or local building codes.

- Doors equipped with automatic door operators can cause serious injury or death if not properly adjusted and operated. To insure safe operation of these doors:
  a) test the sensitivity of the operator's safety reverse mechanism monthly;
  b) remove the pull rope;
  c) make sure the door remains unlocked;
  d) do not allow children to play with the controls.
  e) do NOT install jackshaft openers on doors with standard lift or low headroom track.

Things to Know Before You Begin

Read the instructions completely before starting the installation of the door. Becoming familiar with the components before assembling the door will reduce the installation time.

In the interest of safety this symbol means WARNING or CAUTION. Personal injury and/or property damage may occur unless instructions are followed carefully.

- To avoid damage to the door, you must reinforce the top section of the door in order to provide a strengthened mounting point for attachment of an automatic opener (see page 29).
- Check headroom clearance requirements in the chart below before beginning.

WARNING

Springs and related hardware are under EXTREME spring tension and could cause SEVERE INJURY OR DEATH if mishandled. DO NOT ATTEMPT TO REPAIR OR ADJUST the springs, red fasteners, hardware, or structure to which they are attached.

IMPORTANT! Before Starting Installation:

Step 1: Check the opening size and verify that the door is the proper size for the opening. Wood jambs require the door to be the same size as the opening with stop moldings nailed to inside of opening to seal the door. Steel jambs require the door to be two-inches wider than the opening to allow a one-inch door overlap on each side. No stop moldings are required in this application. The opening must be plumb and square to assure a good fit.

Step 2: Check all materials with the pick slip found in the hardware carton. Any report of shortages must be accompanied by the Clopay contract number. A copy of the pick slip is kept at the factory. Report the number of pieces received along with the number of pieces short. Springing information, including the number of turns to wind spring, can be found on the hardware box label.

Step 3: Check for sufficient headroom and side room. The chart below contains approximate clearance requirements. Headroom is the distance between the top of opening to the ceiling or the lowest obstruction.

Step 4: The hardware package supplied with your door should include red fasteners for attachment of the torsion spring center bracket and/or the bottom roller brackets. These fasteners must be securely attached as indicated in the installation manual.

Clearance Requirements

	Headroom*,**,***		Sideroom*		Backroom	
	2" [51 mm] Track	3" [76 mm] Track	2" [51 mm] Track	3" [76 mm] Track	2" [51 mm] Track	3" [76 mm] Track
12" [305 mm] Radius	14 1/2" [368 mm]	N/A	4 1/2" [114 mm]	5 1/2" [140 mm]	Door Ht.+23" [584 mm]	Door Ht.+25" [635 mm]
15" [381 mm] Radius	16" [406 mm]	18" [457 mm]	4 1/2" [114 mm]	5 1/2" [140 mm]	Door Ht.+23" [584 mm]	Door Ht.+25" [635 mm]
Low Headroom Rear Torsion	6 1/2" [165 mm]	10" [254 mm]	6" [152 mm]	6 1/2" [165 mm]	Door Ht.+30" [762 mm]	Door Ht.+32" [813 mm]
Low Headroom Front Torsion	10" [254 mm]	13" [330 mm]	6" [152 mm]	6 1/2" [165 mm]	Door Ht.+23" [584 mm]	Door Ht.+25" [635 mm]
High Lift	High Lift +12" [305 mm]	High Lift +12" [305 mm]	4 1/2" [114 mm]	5 1/2" [140 mm]	Varies	Varies
Vertical Lift	Dr. Ht. +12" [305 mm]	Dr. Ht. +12" [305 mm]	4 1/2" [114 mm]	5 1/2" [140 mm]	23" [584 mm]	25" [635 mm]

* **Doors over 18' [549 cm] high, over 1,000 lbs. [454 kg] springing weight, high cycle springs, may require additional headroom and sideroom. Consult distributor for exact requirements.**

* **Doors with more than one row of springs require additional headroom.**

** **Chain hoist and electric operators require additional clearance. See instructions provided with operator for exact amount.**

*** **Vertical lift doors with straight incline require additional headroom. Contact factory.**

Tools Needed

- "C" Clamps or Locking Pliers
- Hammer
- Winding Bars (Torsion Only)
- Screwdriver
- Tape Measure
- Level
- Socket wrench kit
- Pliers
- Drill, and $^1/_4$" [6 mm], $^3/_{16}$" [5 mm], & $^3/_8$" [10 mm] bits
- Step ladder
- Saw horses or other supports for placing section on while assembling

Removing the Existing Door

WARNING

Garage doors use springs to balance the door weight. Generally there are two types of springs used — extension springs and torsion springs. **If your present door uses torsion springs, have a qualified door service professional remove them.** Attempting to remove a torsion spring assembly without proper training and tools may result in an uncontrolled release of spring forces which can cause serious or fatal injury.

Preparing the Opening

Step 1: On the inside of the garage your opening should be framed with wood jambs, 2" x 6" [51 mm x 152 mm] if possible, or with steel channel as shown in Figure 1-J. The side jambs should extend to approximately the same height as the headroom required. If you have just removed an old door, the condition of the jambs should be inspected. If the jamb has deteriorated, it should be replaced now. The jambs should be plumb and the header level. If there are any bolts fastening the jambs to the wall, the heads should be flush so they don't interfere with the installation of your new door. (FIG. 1-J) Typical installation for wood, steel or masonry jamb material is shown in Figure 2-J.

Step 2: Door stop molding for wood jambs should be temporarily nailed to the edges of the jambs flush with the inside. (FIG. 3-J) Since steel jambs require the door to be 2" [51 mm] wider than the opening, no stop molding is required. Stop molding featuring a built in weather seal is offered as an option.

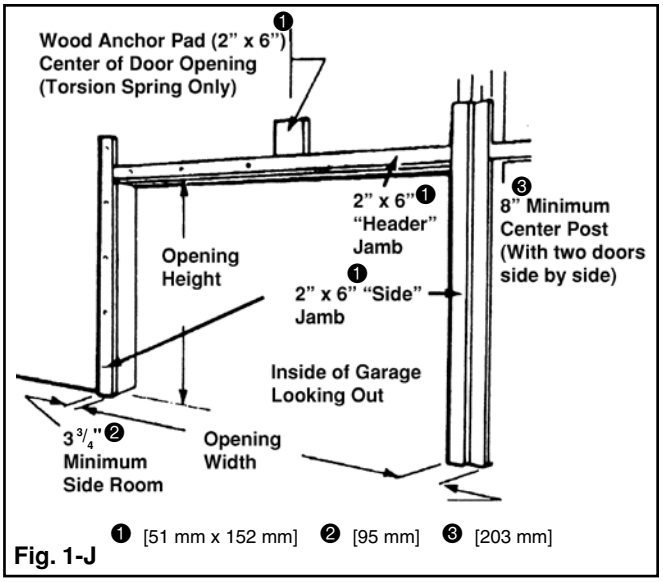

Fig. 1-J

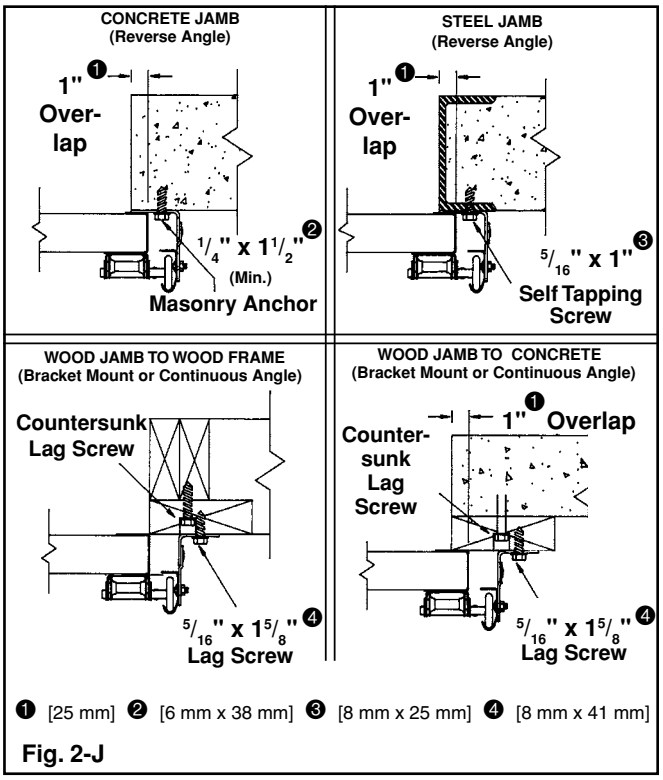

Fig. 2-J

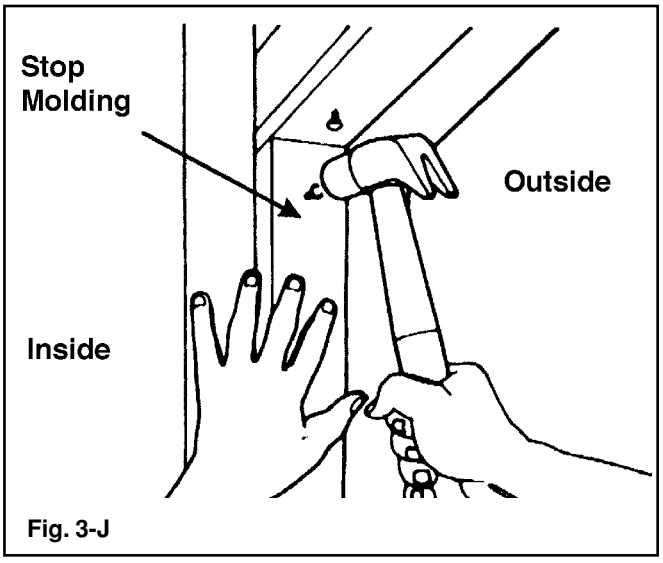

Fig. 3-J

For Torsion Springs Only

WARNING

If your door has a torsion assembly, **you must make sure that the wood or steel anchor pad is of good quality, free of cracks or splits, and is firmly attached to the garage wall. (Fig. 1-J)** Failure to securely attach the anchor pad could allow the springs to violently pull away from the garage wall, and could result in severe injury and/or property damage. **Under no circumstances should the anchor pad be attached with nails.**

Refer to Figure 1-J & 2-J for the configuration of 2" x 6" [51 mm x 152 mm] wood jambs.

IMPORTANT: The wood anchor pad must be made of a Grade 2 or better Southern Yellow Pine (also known as Southern Pine or Yellow Pine) 2" x 6" x 12" [51 mm x 152 mm x 305 mm] minimum. The Southern Yellow Pine must be free of splits and cracks. **Do not use wood labeled as spruce-pine-fir (or SPF).** Steel anchor pads should be $^1/_4$" x 10" x 12" [6 mm x 254 mm x 305 mm] minimum, securely fastened to the structure.

The wood anchor pad must be installed into the frame of the garage with at least four $^3/_8$" x 3" [10 mm x 76 mm] long lag screws (one at each corner). The four lag screws must be installed no closer than $1^1/_2$" [38 mm] from the sides and the ends of the 2" x 6" [51 mm x 152 mm]. These lag screws must fasten into the structural frame of the building, not the drywall or sheet rock. Wood anchor pad and $^3/_8$" x 3" [10 mm x 76 mm] lag screws are not supplied.

NOTE: The anchor pad can be off-center to the width of the opening by up to 10" [254 mm] in either direction.

WARNING

Red fasteners must be used for attachment of the bottom roller brackets on commercial doors.

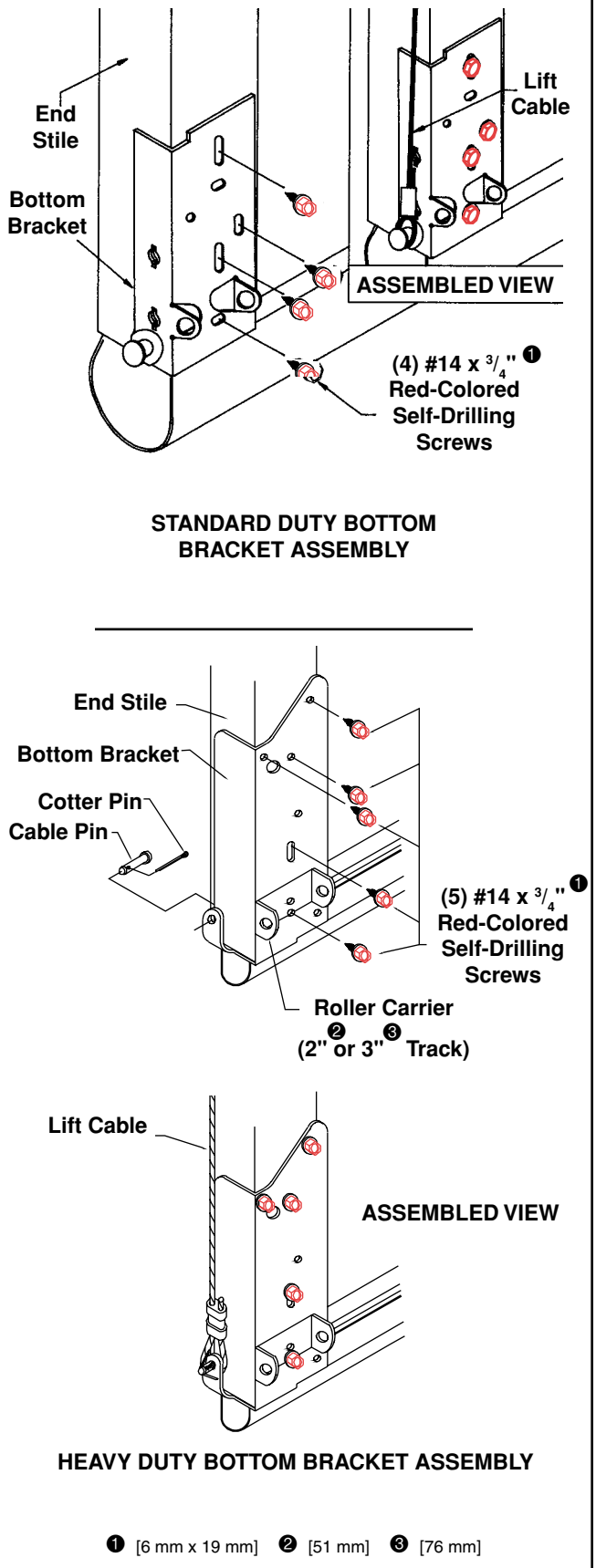

Fig. 1-S

– All center hinges are #1 hinges (except for full vision sections, and Full View doors, see page 13).
– Start end hinge sequence at the top of bottom section.
– Double end hinges use the same # hinge as outside end hinges.
– Rollers in end hinges will use farthest sleeve from section. (FIG. 2-S)
– To match the taper of the track some numbered end hinges may repeat instead of increasing sequentially. For example, a 10' high door with five sections may have the #3 hinge repeat, in which case the door would be installed with the following hinge pattern (starting from the bottom): #1, #2, #3, #3, #4. Which and how many hinge numbers repeat depends on the door size and model. Hinges should always be installed so that the numbers are in increasing order starting from the bottom. Repeating hinge numbers should be located consecutive to each other.

HINGE ILLUSTRATION & ROLLER PLACEMENT

#1 Hinge

14 GA.

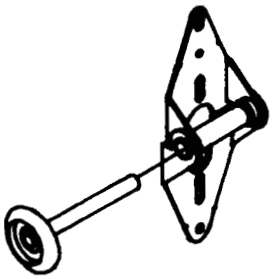

18 GA. Center Hinge

#2, 3, 4, Hinge

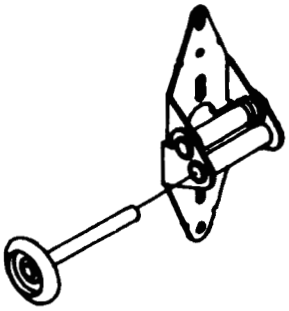

	End Hinge Top of Each Section				
	Bottom Section	#2 Section	#3 Section	#4 Section	#5 Section
2" [51 mm] Track except as listed below	#1	#2	#3	#4	Continue in this manner
2" [51 mm] Track with Vertical or High Lift, (4) or (5) section high doors only	#2	#4	#6	#8	N/A
3" [76 mm] Track except as listed below	#3	#4	#5	#6	Continue in this manner
3" [76 mm] Track with Vertical or High Lift, (4) or (5) section high doors only	#4	#6	#8	#10	N/A

SIDE VIEW
HINGES ARE TALLER WITH INCREASING NUMBER

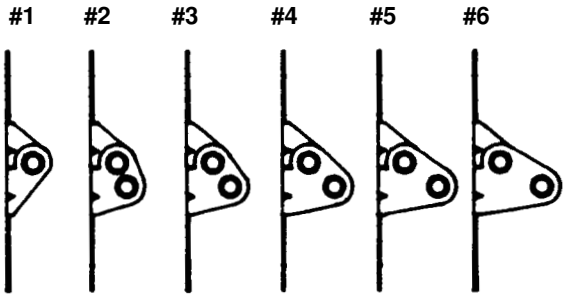

Fig. 2-S

Preparing and Installing Door Sections

Step 1: Bottom Section. Find bottom section (the one with bottom weatherseal), then lay it on saw horses. Find bottom bracket in hardware carton. Several different types are used depending on door thickness, door weight, and track size. Find the type of bottom bracket supplied in one of the pictures shown in Figure 1-S and fasten bottom bracket using the red-colored fasteners shown. (Low headroom doors refer to Figure 8-T, page 23.)

Some have flanges which hook under the bottom section and some do not. Install cables, then position the bracket in place. (FIG. 1-S) Install hinges on end and center stiles of the bottom section using #14 x $^3/_4$" [6 mm x 19 mm] self-drilling screws. See Figure 2-S for sequence and hinge placement. For Model 901 doors and doors with Full Vision see page 13. Stack bottom section in opening. **Long stem rollers provided go into bottom brackets.** Install vertical track as described on page 15. Top rollers will hold section in place.

Strutting Schedule

NOTE: All doors do not require struts, follow instructions listed below according to the number of struts supplied.

- **Number of struts will be shown on hardware box.**
- All struts are attached with #14 x $^3/_4$" [6 mm x 19 mm] self-drilling screws to center stiles and end stiles.
- When only one strut is supplied it is to be mounted on the top section. (FIG. 3-S)
- When an equal number of struts and sections are supplied, install one on each section as illustrated, omitting strut with asterisk. (FIG. 3-S)
- If your door contains less struts than sections, evenly distribute the struts from bottom to top.
- Doors installed in high windload regions (Florida and other hurricane prone areas) may require additional reinforcement beyond what is detailed in these instructions. Please refer to engineering drawings for these areas.
- **When there is one more strut provided than the number of sections this strut is to be mounted on the bottom section over the bottom bracket as shown in illustration. (FIG. 3-S)**
- Top strut is to be mounted with top edge of strut $^1/_4$" [6 mm] down from top of door and above top bracket as illustrated—except on low headroom installations, see page 23. (FIG. 3-S)
- With section face down on saw horses, place strut on top of section (section should be flat). Fasten strut at each end stile and each hinge hole location. Attach each end of the strut first, then attach center.

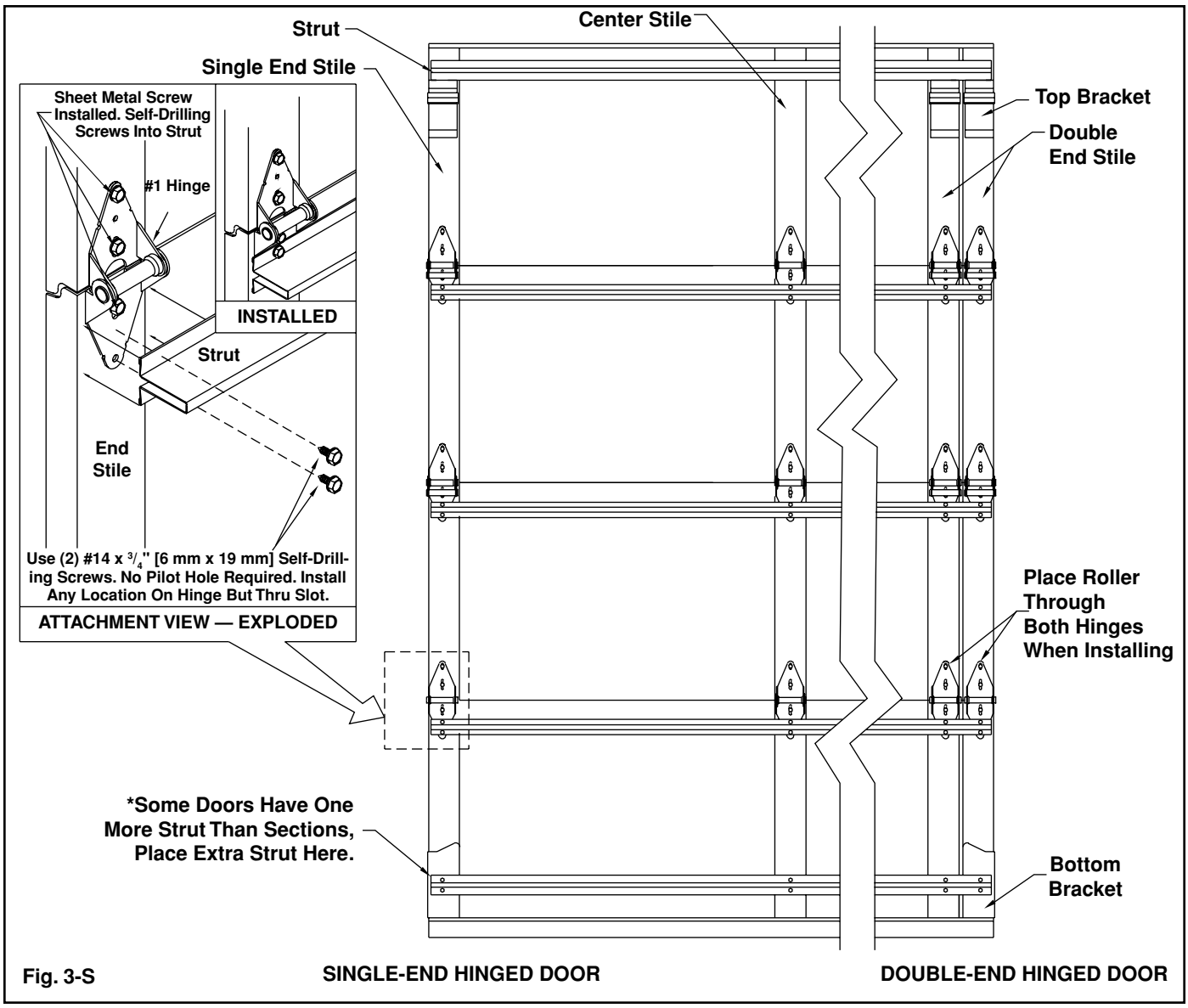

Fig. 3-S

C-Channel Attachment (Non-Windload Doors Only)

If you have a windload door, refer to instructions or drawing provided with door.

Insulated Sandwich Doors Only
Before installation of hinges, tear the liner off the adhesive on the EPS backer plates and apply vertically across the section at each center hinge location. (FIG. 4-S)

All Doors
While Section is still on sawhorses, place C-Channel in the middle of section, with open end facing down. Using the access holes at each end of the C-Channel, attach (1) #14 x $^3/_4$" [6 mm x 19 mm] self-drilling screw through the bottom of the C-Channel and into the Stile or EPS Backer Plate.

All Doors
Attach the C-Channel straps to the channel and the stile (or EPS backer plate), using (3) #14 x $^3/_4$" [6 mm x 19 mm] self-drilling screws, at right. One strap is to go on each end of the channel, and a strap is to be placed at each center stile location.

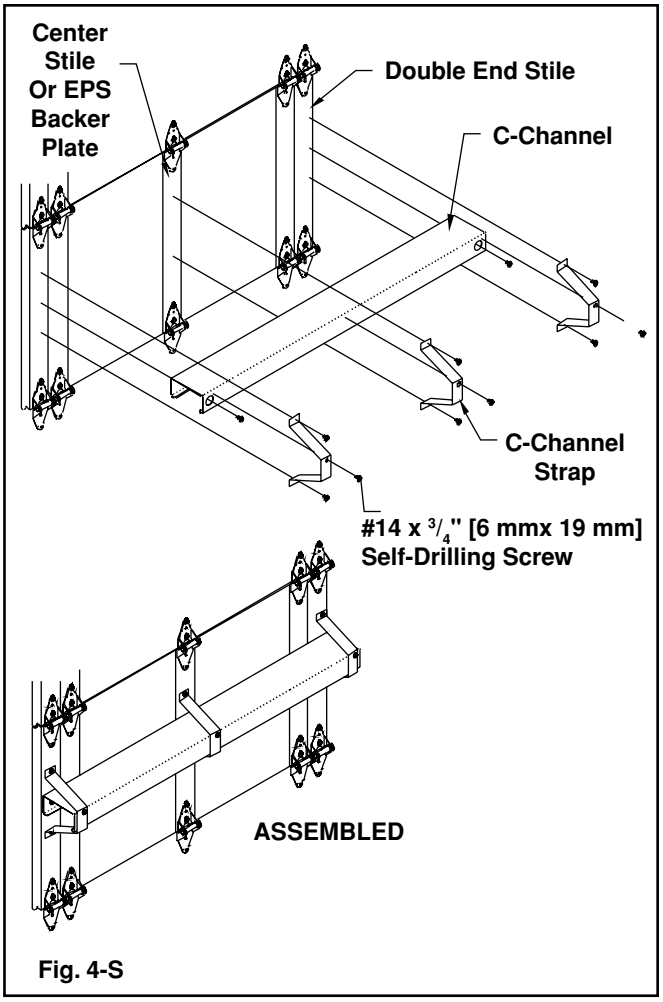

Fig. 4-S

Lift Handle Instructions

Step 2:
Locate the step plate on the upper portion of either bottom bracket and attach with (2) #14 x $^{3}/_{4}$" [6 mm x 19 mm] self-drilling screws. (FIG. 7-S) Mount the rolled grip lift handle in line above the step plate using (2) #14 x $^{3}/_{4}$" [6 mm x 19 mm] self-drilling screws. Orient the handle vertically on the end stile.

Section Seal. If section seal is provided or bought as an option, it should be installed over the inside ship lap or inside the groove as indicated in Figure 1-LAP and Figure 2-LAP.

Step 3:

#2 Section. Attach bottom half of center hinges to top of section using #14 x $^{5}/_{8}$" [6 mm x 16 mm] hex head sheet metal screws. Attach end hinges. (FIG. 2-S) If section has lock see Step 4 for sequence. Stack section. After section is stacked, rollers in the track will hold section in place. (If struts are supplied see Figure 3-S for placement.)

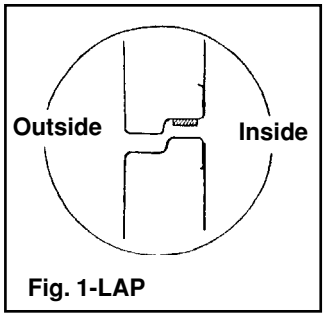

Fig. 1-LAP

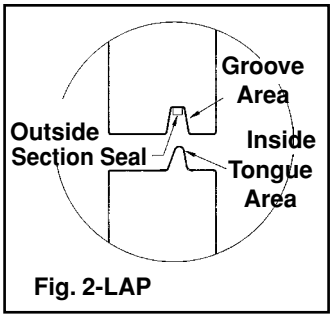

Fig. 2-LAP

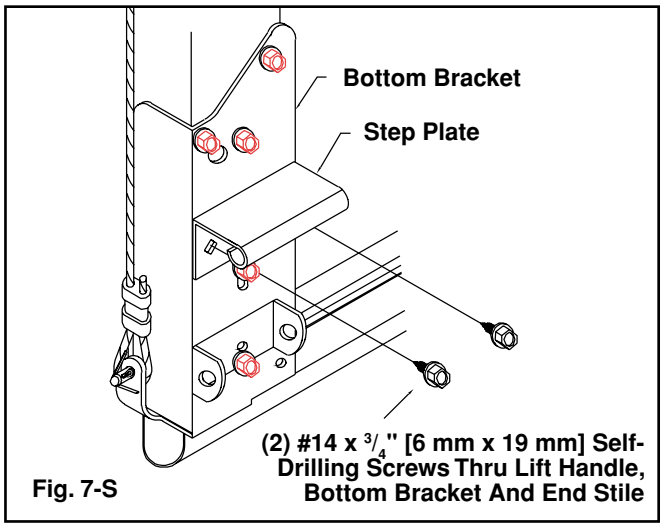

Fig. 7-S

Lock Installation

Step 4: The following locking systems are available for commercial steel doors:
- Side Lock (FIG. 8-S)
- Inside Slide Bolt (FIG. 9-S)

1. Attach the side lock assembly to the second section. Unless otherwise specified, this stile will be located 18" [457 mm] in from the right hand side of the door (inside facing out). Secure the lock cylinder #2 with the two long machine screws as illustrated. Attach the handle (1) and inside lock mechanism (7), using the fasteners provided.

NOTE: $1^3/_4$" [44 mm] thick doors should use the $1^3/_4$" [44 mm] pan head machine screw (9) provided in the lock bag to mount the outside handle. $1^3/_8$" [35 mm] thick doors should use the $1^1/_2$" [38 mm] pan head machine screw provided.

2. Finally, attach the lock bar (11) using $^1/_4$" - 20 x 1" [6 mm x 25 mm] hex head screw and nut (10 & 12), and lock bar guide (14) using #14 x $^5/_8$" [6 mm x 16 mm] sheet metal screw. When track is permanently in place, adjust the lock bar guide so lock bar rests against the top of one of the engaging slots in the track. Details are shown in Figure 8-S.

3. The inside slide bolt is installed on the end stile of the second section so the slide bolt rests against the top of one of the rectangular engaging slots in the vertical track. Details are shown in Figure 9-S.

Step 5: #3 Section (and up to, but not including, top section). Attach bottom half of center hinges to top of section using #14 x $^5/_8$" [6 mm x 16 mm] hex head sheet metal screw. Attach end hinges. (See Figure 2-S, page 8, for sequence.) After section is stacked, rollers in the track will hold section in place. (If struts are supplied see Figure 3-S, page 9, for placement.)

Step 6: Continue to stack and install remaining sections in the same manner as described in Step 5 until all but the top section are properly in place.

Step 7: Top Section. Place top brackets over pre-punched holes so they are flush with edge of section. Center of roller carrier will be about 4" [102 mm] down from top of section. Using four #14 x $^5/_8$" [6 mm x 16 mm] hex head sheet metal screws per top bracket, attach top brackets to section. (FIG. 10-S) (Low headroom doors $^3/_4$" [19 mm] refer to Figure 7-T, page 23.)

If struts are supplied see Figure 3-S, page 9, for placement.

Stack top section after all tracks are installed, but before springs are wound.

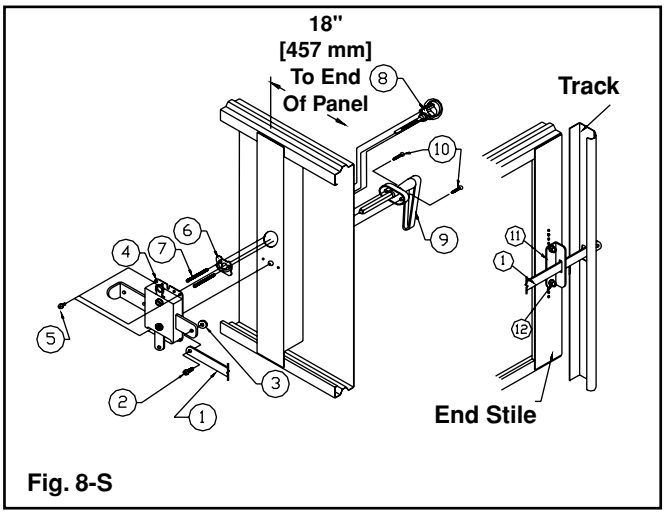

Fig. 8-S

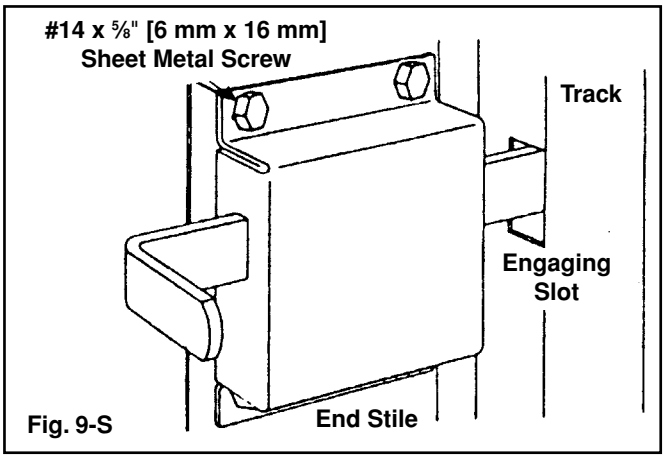

Fig. 9-S

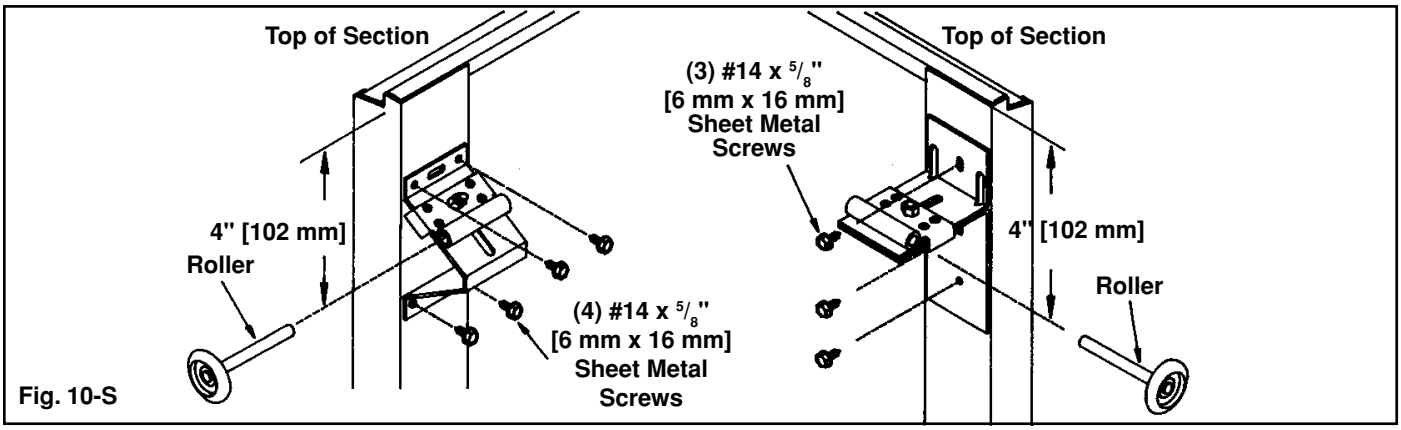

Fig. 10-S

Full Vision and Steel Door

If your door has been furnished with one or more full vision sections, please refer to Figure 11-S for identification of the special hinge parts which must be used.

End hinges are of the same type and follow the same sequence as described in the general instructions (refer to Figure 2-S, page 8). The standard #14 x $^5/_8$" [6 mm x 16 mm] hex head sheet metal screws are used to fasten the end hinges to the full vision section. See Figure 12-S if you have a full vision top section.

For attachment of center hinges, proceed as follows:

Refer to the drawings in Figure 11-S for identification of proper center hinges and the positions in which they are to be installed. Note that the #14 x $^3/_4$" [6 mm x 19 mm] self-drilling screws are used in the bottom rails and the $^1/_4$" x $^3/_4$" [6 mm x 19 mm] hex bolts and $^1/_4$" [6 mm] hex nuts are used to attach the center hinge to the fin of the upper rail. (FIG. 12-S) Special attention must be given to this step of the procedure since proper placement of hinges is critical to installation of the door.

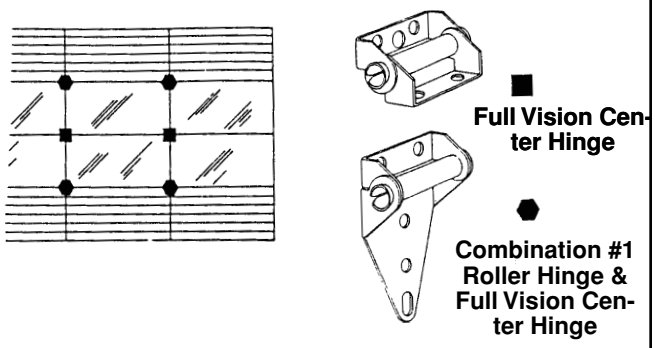

Fig. 11-S

Top Roller Bracket Attachment

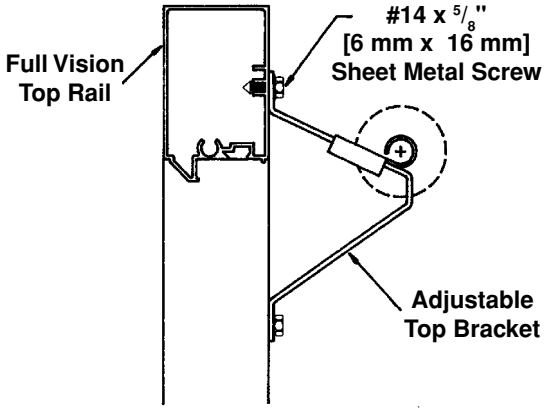

If your door has a full vision top section, it is very important that each top roller bracket be attached to the reinforcing fins in the top rail and the end stile. Two #14 x $^3/_4$" [6 mm x 19 mm] self-drilling screws should fasten the top of each bracket to the top rail and one screw should attach the bottom of the roller bracket be to the end stile.

Remember: the small indentations that run the length of the top rail and end stile mark where the reinforcing fins are located.

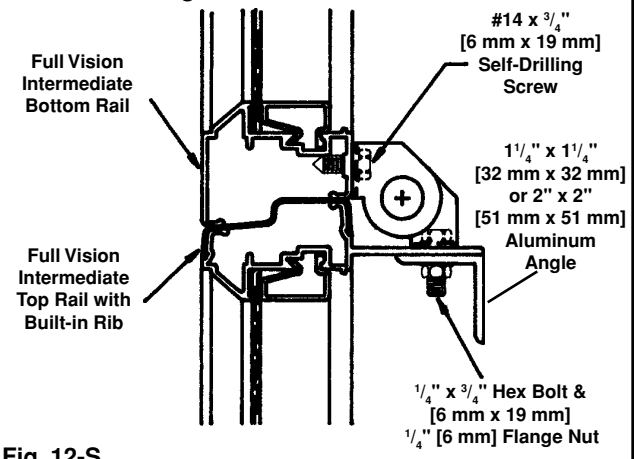

Fig. 12-S

Refer to Figures 12-S, 13-S and 14-S for reinforcement of full vision sections. After full vision sections are in place, refer to the general instructions for completion of your installation.

Sometimes, higher than standard wind loading requires a bridge strut (aluminum angle with offset plates). (FIG. 14-S)

REINFORCEMENT SCHEDULE	
Door Width	**What Is Needed For $^1/_8$" [3 mm] Thick Glazing**
Up to 11'2" [340 cm]	None
11'4" to 12'2" [345 cm to 371 cm]	None
12'3" to 14'2" [373 cm to 432 cm]	One $1^1/_4$" x $1^1/_4$" x $^1/_8$" angle per section [32 mm x 32 mm x 3 mm]
14'3" to 15'2" [442 cm to 462 cm]	One $1^1/_4$" x $1^1/_4$" x $^1/_8$" angle per section [32 mm x 32 mm x 3 mm]
15'3" to 16'2" [465 cm to 493 cm]	One $1^1/_4$" x $1^1/_4$" x $^1/_8$" angle per section [32 mm x 32 mm x 3 mm]
16'3" to 18'2" [495 cm to 554 cm]	One 2" x 2" x $^1/_8$" angle per section [51 mm x 51 mm x 3 mm]
18'3" to 20'2" [556 cm to 615 cm]	One 2" x 2" x $^1/_8$" angle per section [51 mm x 51 mm x 3 mm]
20'3" and Over [617 cm]	One Bridge Strut per section
Door Width	**What Is Needed For $^1/_4$" [6 mm] Thick Glazing**
Up to 11'2" [340 cm]	None
11'4" to 12'2" [345 cm to 371 cm]	One $1^1/_4$" x $1^1/_4$" x $^1/_8$" angle per section [32 mm x 32 mm x 3 mm]
12'3" to 14'2" [373 cm to 432 cm]	One $1^1/_4$" x $1^1/_4$" x $^1/_8$" angle per section [32 mm x 32 mm x 3 mm]
14'3" to 15'2" [442 cm to 462 cm]	One 2" x 2" x $^1/_8$" angle per section [51 mm x 51 mm x 3 mm]
15'3" to 16'2" [465 cm to 493 cm]	One 2" x 2" x $^1/_8$" angle per section [51 mm x 51 mm x 3 mm]
16'3" to 18'2" [495 cm to 554 cm]	One Bridge Strut per section
18'3" to 20'2" [556 cm to 615 cm]	One Bridge Strut per section
20'3" and Over [617 cm]	One Bridge Strut per section

Fig. 13-S

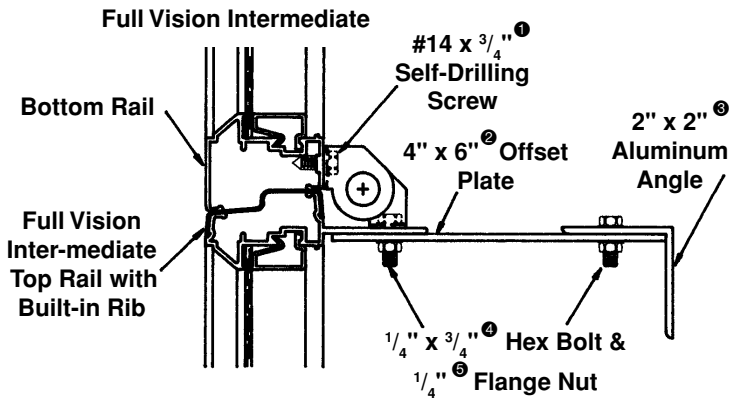

❶ [6 mm x 19 mm] ❷ [102 mm x 105 mm] ❸ [51 mm x 51 mm] ❹ [6 mm x 19 mm] ❺ [6 mm]

Fig. 14-S

Track Installation

General Information. There are three basic pieces of information about your tracks that you need to know to start installation.

1. **Track size -** Track comes in two sizes: 2" [51 mm] and 3" [76 mm].

2. **Type of lift -** Each type of lift is different from the top of the door on up. However, the vertical track from the floor to the top of the door does not change between the different lift options. (FIG. 1-T) Therefore, the vertical track instructions to the top of the door are explained in one group (Step 1). Then turn to your specific type of lift for completion of the installation.

3. **Type of mounting -** Bracket mounting is used on lighter doors with wood jambs. Brackets are loose or riveted into place. Loose brackets are attached to the track with (1) $^1/_4$" x $^5/_8$" [6 mm x 16 mm] track bolt and nut per bracket. Continuous angle and reverse angle track are shipped with mounting angle attached. Loosen nuts on track bolts so track will slide on the angle. (FIG.1-T)

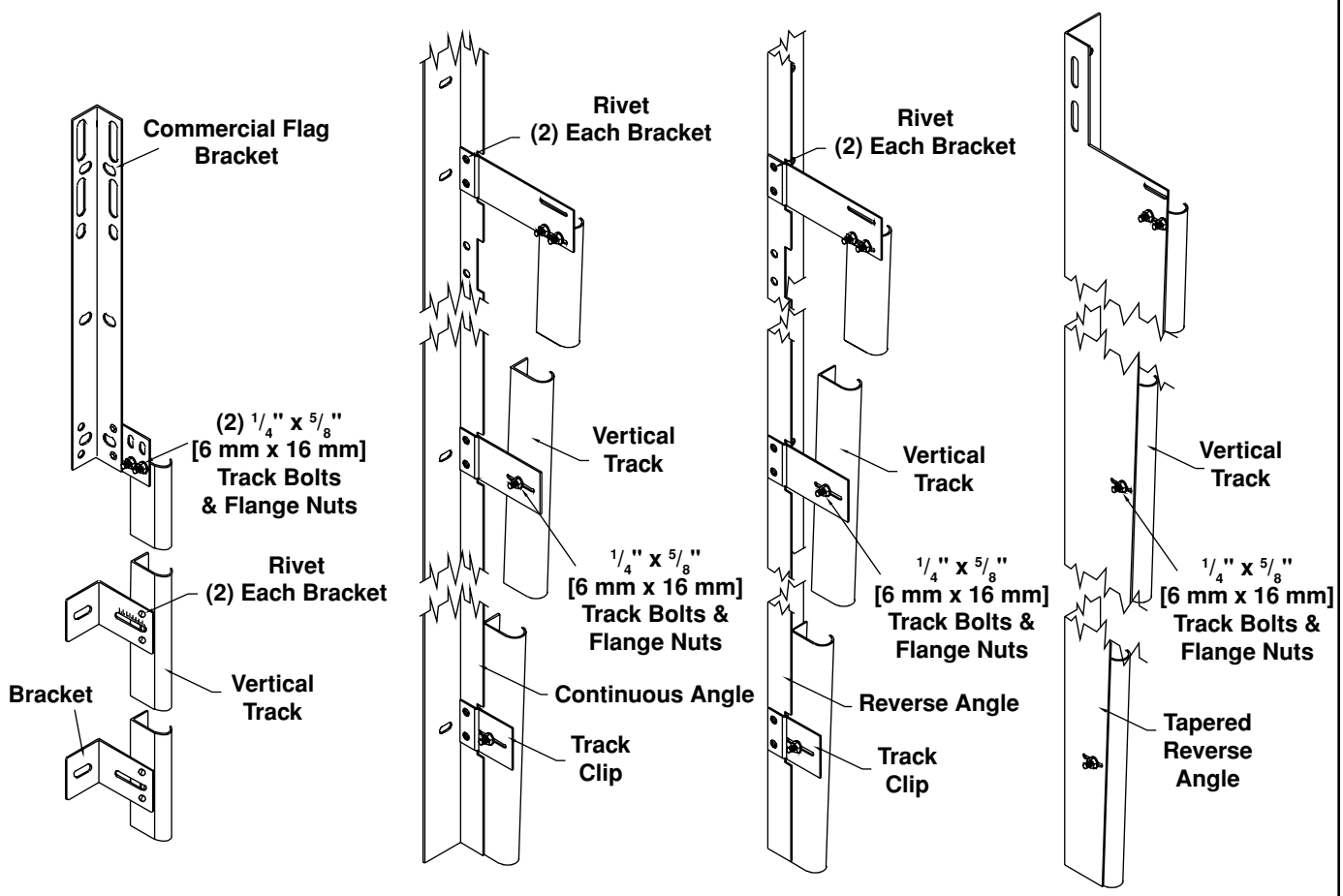

Fig. 1-T

Step 1: Vertical Track. Center bottom section in opening on inside of garage. Level section by blocking up low side. (FIG. 2-T) Leave block until door is completed. Install the vertical track on opposite side of where block was placed, over the two rollers of the bottom section with a twisting motion as in Figure 3-T. Raise track $^1/_2$" [13 mm] off the floor, Figure 2-T, and screw $^5/_{16}$" x $1^5/_8$" [8 mm x 41 mm] lags (wood jambs), or self-drilling screws (steel jambs) through bottom mounting bracket. (FIG. 4-T) Adjust track sideways to allow $^1/_8$" [3 mm] end play in roller—about $^1/_4$" [6 mm] from edge of track to edge of door. (FIG. 2-T) Plumb vertical track and put at least two lags or sheet metal screws in the mounting brackets at the top of the door. Final adjustment will be made after door is stacked. Measure from the top of the vertical track to the top of the bottom section and set the opposite track at exact same height repeating above procedure. (FIG. 2-T) Since the bottom section is level, then the vertical tracks must be level. **Make sure bottom rollers do not come out of the bottom of the track.**

Step 2: Stacking. Stack #2 section on top of bottom section and attach end hinges with rollers in track to hold section in place. Stack the rest of the sections except the top (the top section must be installed after all the tracks are up).

Swing up top half of hinges and use #14 x $^5/_8$" [6 mm x 16 mm] hex head sheet metal screws to fasten door.

Step 3: Finishing Vertical Track. Set the top of the vertical tracks so that there is $^1/_4$" [6 mm] end play in the rollers, about $^1/_2$" [13 mm] from edge of track to edge of door. (FIG. 2-T) Finish attaching vertical track to the wall. If you are mounting on steel jambs, you will have to wait until you can raise the door to finish attaching vertical tracks.

NOTE: To complete the rest of the track installation, refer to the page explaining your specific lift option:

Standard Radius .....Page 17
Roof Pitch .....Page 23
Low Headroom Rear Mount.....Page 24
Low Headroom Front Mount .....Page 26
Vertical Lift .....Page 27
High Lift.....Page 28

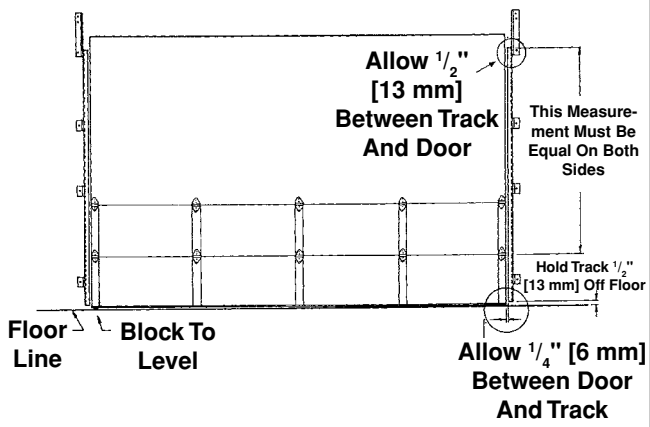

Fig. 2-T

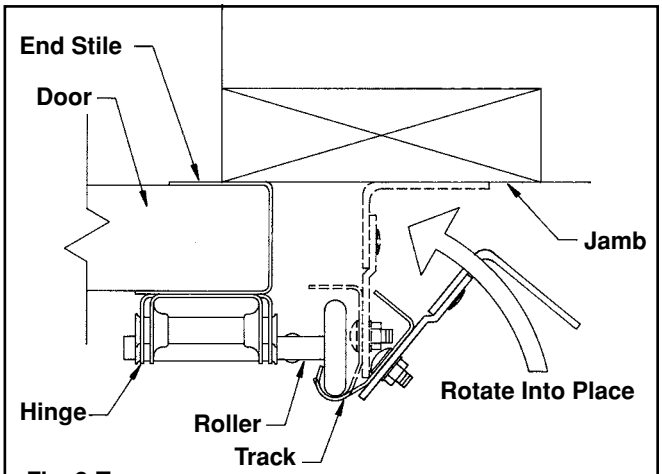

Fig. 3-T

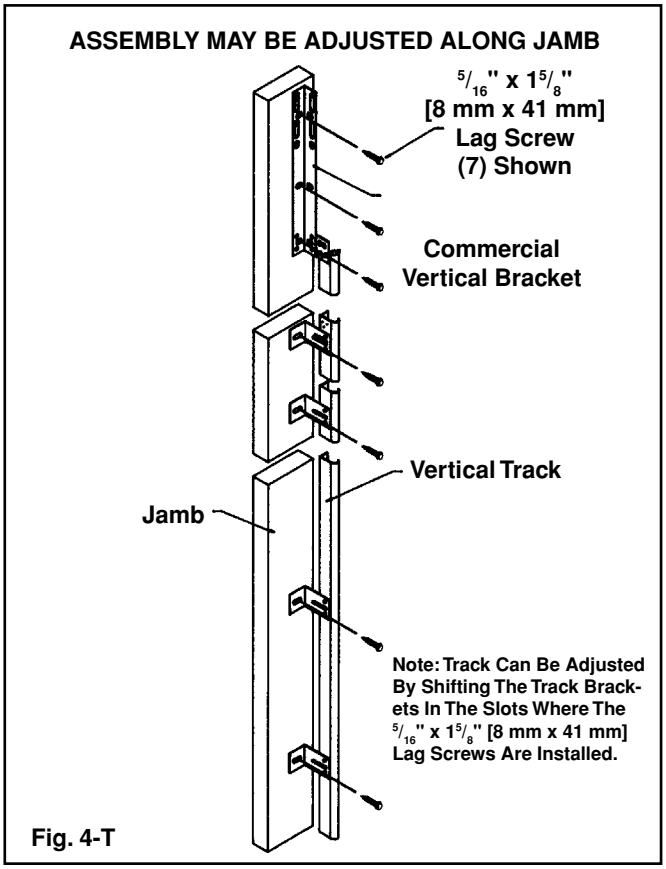

Fig. 4-T

Standard Radius

Attach horizontal track to vertical bracket using $^1/_4$" x $^5/_8$" [6 mm x 16 mm] track bolts and flange nuts. Attach horizontal angle to vertical bracket using $^3/_8$" x $^3/_4$" [10 mm x 19 mm] carriage bolts and flange nuts. Rig a temporary rope to support back of horizontal tracks. They should be level (parallel) to 1" [25 mm] higher in the back when completed. Install top section now to other sections. Refer to Figure 10-S, page 12. (FIG. 5-T)

Spring Installation (Page 18)

Install and wind springs as explained. After springs are installed and wound, release locking pliers and raise door **so that only the two top sections** are in the horizontal tracks. Secure door in place with locking pliers on track above a roller, making sure it can't be raised, and align horizontal tracks. Backhang doors. (FIG. 5-T) **Any door over 12' [366 cm] high requires two backhangs on each horizontal track.** See important note at top of this page for backhang requirements. All backhang material is supplied by the installer. See backhang requirements.

Lower door and push track towards jambs until door is tight against stop or steel jambs and tighten track bolts. Adjust top brackets. (Figure 10-S, page 12) Install inside side slide lock or lock bar (Figure 8-S & 9-S, page 12) after spring is wound. Nail door stop in place if appllicable.

IMPORTANT: Backhang Requirements

Important Note: All doors over 12' [366 cm] high require two backhangs evenly spaced on each horizontal track. (FIG. 5-T) Also, all low headroom track doors, all doors 12' [366 cm] high and under that are over 600 lbs. [272 kg] or have 1" [25 mm] of sag in horizontal track when the door is in full open position, will require two backhangs evenly spaced on each horizontal track.

Inspection of horizontal track is required after completion of garage door installation. With the garage door in the full open position, there should only be $^1/_4$" [6 mm] of freeplay in rollers and $^1/_2$" [13 mm] from the edge of the horizontal track to the edge of the door. (FIG. 5-T) Realign tracks if neccessary.

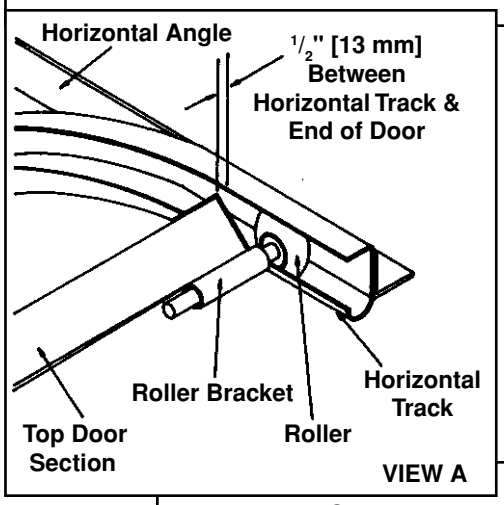

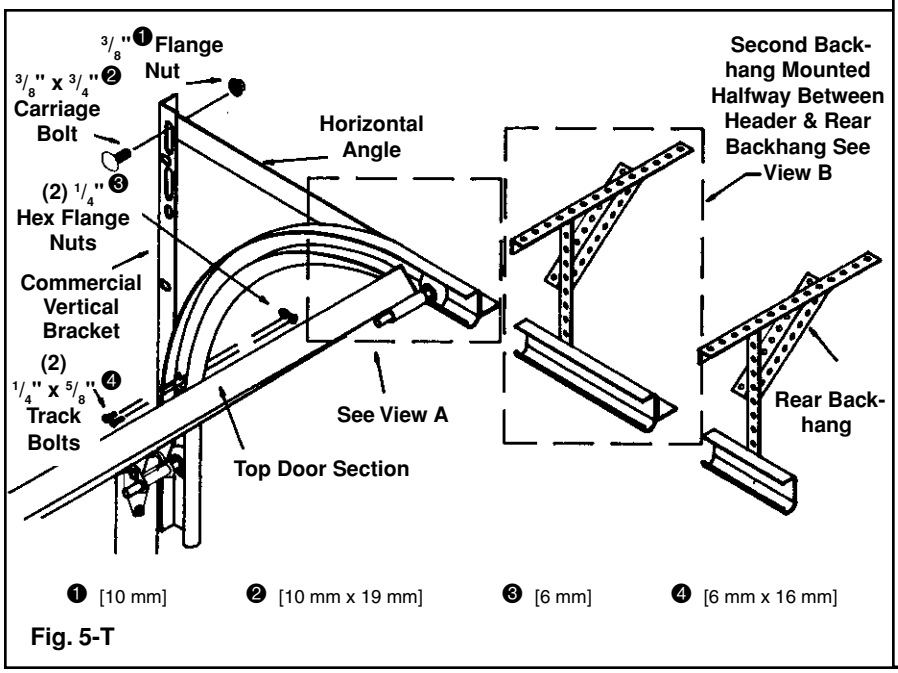

Fig. 5-T

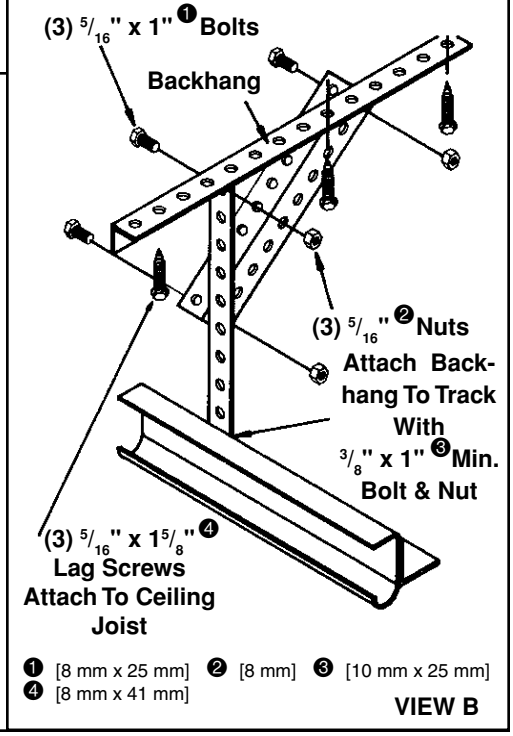

Spring Installation

NOTE: All torsion spring doors will be furnished with a Red Warning Label. These labels must be on all spring anchor brackets in plain view. These Warning Labels will be supplied on spring anchor brackets or in the hardware carton. If sticker is missing it is the responsibility of the installer to contact his supplier and have them provide needed warning labels for installation.

Spring anchor bracket mounting location. Measure from top of door to center of end bearings. Using this measurement, draw a line at the same height for shaft location and mount spring anchor bracket accordingly.

Torque Tube Installation

Slide drums on tube and loosen all set screws. Slide tube into one end bearing plate then back through the opposite one. **Fasten spring anchor bracket using $^5/_{16}$" x $1^5/_8$" [16 mm x 41 mm] red-colored lags.** See warning below. Tube must be straight and level. (FIG. 1-TOR)

NOTE: Pilot drill in wood with $^3/_{16}$" [5 mm] drill.

WARNING

Spring anchor brackets anchor the springs to the wall. You must fasten securely with red-colored fasteners. Never remove spring anchor bracket when springs are wound.

Always start with the left drum. Slide it against the end bearing plate and tighten set screws.

Set screws: Tighten set screws enough to dimple shaft, about 1 $^1/_4$ turns after set screws first hit shaft. Make sure set screws are placed 90 degrees apart.

(FIG. 1-TOR) Bring cable up between wall and roller shafts behind drum and into notch in edge of drum. Turn drum and shaft until cable is tight. Make sure cable stop is seated against drum. Clamp locking pliers on shaft and against header to hold cable tight. Wind cable on right drum and tighten set screws. Tension must be equal on both cables. Cables are now set. See spring winding directions. (FIG. 1-TOR)

Auxiliary Shaft Supports

Refer to Figure 1-AT for placement of auxiliary shaft supports if required.

Solid Shaft Installation

Slide springs and drums on shaft and loosen all set screws. Install half of shaft coupler. Insert key and tighten set screw.

Set screws: Do not exceed $^1/_2$ turn after coming in contact with shaft. Make sure set screws are placed 90 degrees apart.

(FIG. 2-TOR, View F) Slide either shaft into end bearing and **fasten spring anchor bracket using $^5/_{16}$" x $1^5/_8$" [8 mm x 41 mm] red-colored lag screws (wood jambs) $^5/_{16}$" x 1" [8mm x 25 mm] red-colored self-tapping screws (steel jambs).** Center shaft on the mark made earlier for proper height. Slide other shaft into opposite side and align shaft coupler. Clamp shaft coupler together and fasten spring anchor brackets. Slide both drums against end bearings and insert $^1/_4$" x $^1/_4$" [6 mm x 6 mm] keys and then tighten set screws. (FIG. 2-TOR, View E) Remove clamp from shaft coupler.

Bring cable up between wall and roller shafts, behind drum and into notch in edge of drum. Turn drum and shaft until cable is tight. Make sure cable stop is seated against drum.

Clamp locking pliers onto shaft and against header to hold cable tight. Repeat procedure for setting cable on the opposite side. Tension must be equal on both cables. Bolt shaft coupler together. Cables are now set. See spring winding directions following.

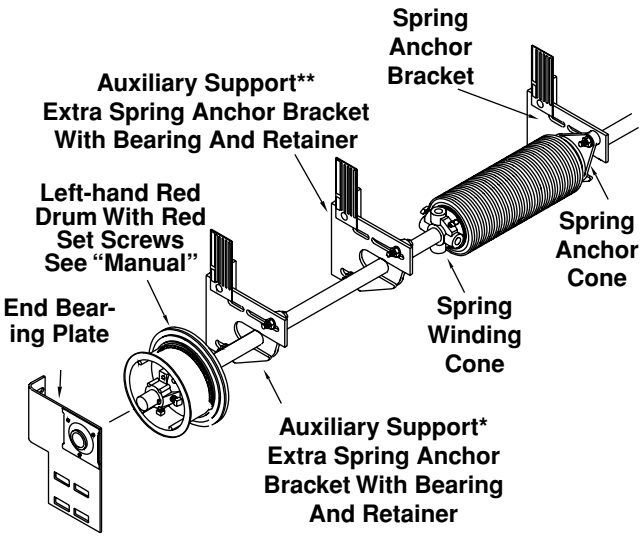

Auxiliary bearings must be assembled to the shaft before drums are put on shaft.

***Used on 20' [610 cm] or wider doors or doors 730 lbs. [331 kg] or greater. To be installed approximately 3" in from drum.**

****Used only on doors over 20' [610 cm] wide with only two springs. Auxiliary support bearing is to be installed halfway between spring and drum.**

Fig. 1-AT

Spring Winding

WARNING

SPRING TENSION IS DANGEROUS.

A sudden release of the springs could result in severe injury. Proceed with caution, following these instructions carefully. Before winding any tension on springs, make sure door is securely locked down with a vise-grip placed on vertical track above a roller. Always use proper size winding bars. Never use screwdrivers or any tool too large or too small. They may break and cause serious injury. Stand to the side of winding bars while winding springs.

Draw a straight chalk line across spring. This will indicate the number of turns on spring as you wind. Springs will get longer when wound. Using two cold rolled steel winding bars about 18" [457 mm] long (not supplied) that fit snugly in the winding plug holes, wind the springs toward ceiling as shown. (FIG. 1-TOR & 3-TOR) **Low headroom double track doors: wind springs toward the floor (down) instead of up.** See instructions on pages 23 & 24. Wind springs the number of turns shown on the hardware box label. **Stretch the springs the width of two coils then tighten set screws.** This is done by putting the two winding bars on opposite sides of the winding plug and pulling towards drum.

WARNING

At this point, springs are fully wound. Springs should stretch easily. Do not force, as it could break the winding plug and cause injury.

Set Screws

Torque Tube: Tighten set screws enough to dimple shaft, about $1^1/_4$ turns after set screws first hit shaft.
Solid Shaft: Do not exceed $^1/_2$ turn after coming in contact with shaft.

To finish door installation, refer to your specific type of track. Final spring tension adjustments should be made after installation is completed. Always adjust springs with door closed and locked.

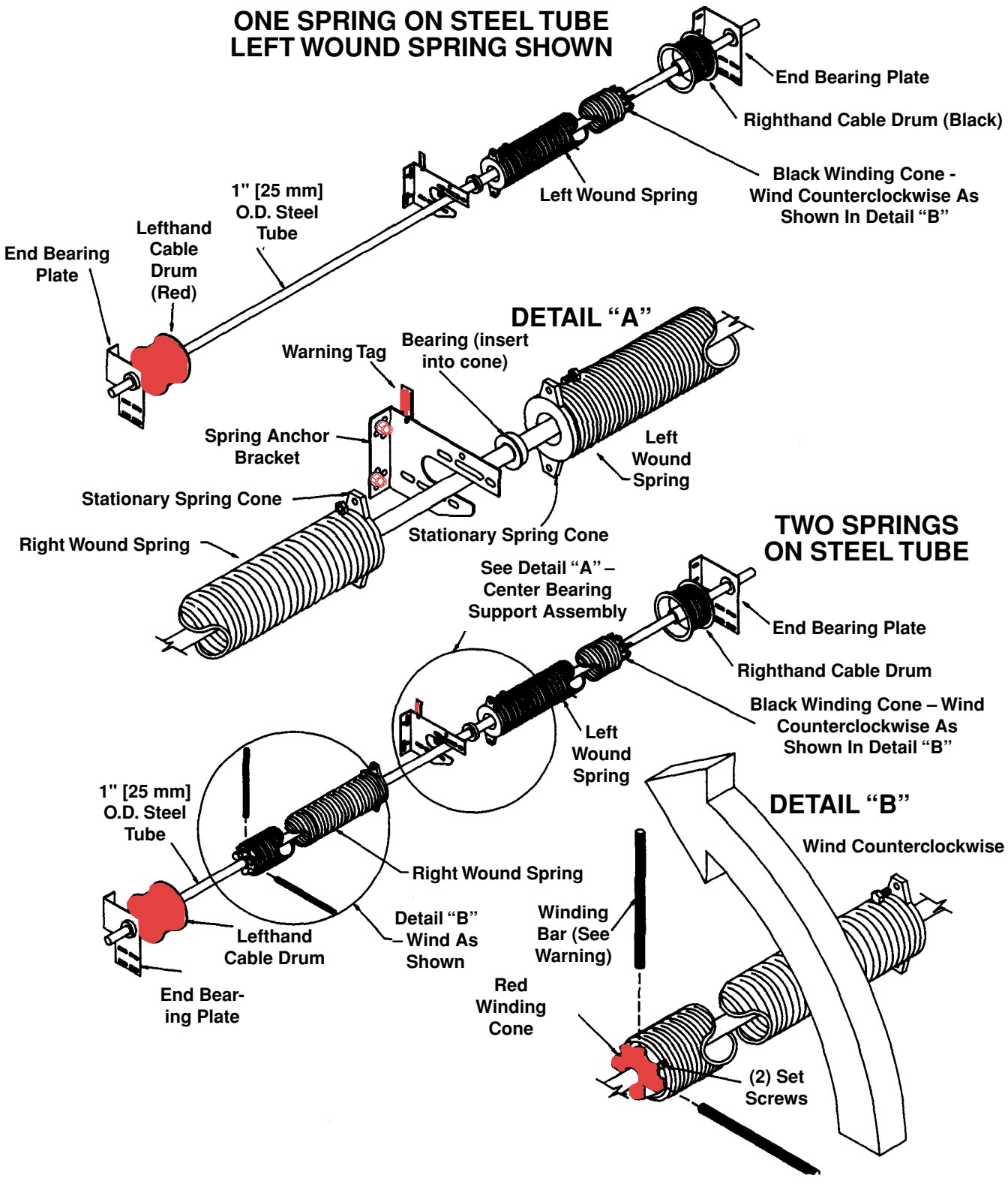

WARNING

Always use good quality, snug fitting, constant diameter, solid steel winding bars when winding or adjusting springs. The use of any other object can result in severe injury. When winding the springs, the winding bar must be inserted into the full depth of the holes in the winding cone. Keep a firm grip on the winding bars at all times. Use a sturdy ladder and stand to the side of the winding bars.

If your door has a torsion spring assembly, you must make sure that the wood anchor pad is firmly attached to the garage wall. Failure to securely attach the anchor pad could allow the springs to violently pull away from the garage wall, and could result in severe injury and/or property damage. In no case should nails be used.

Fig. 1-TOR

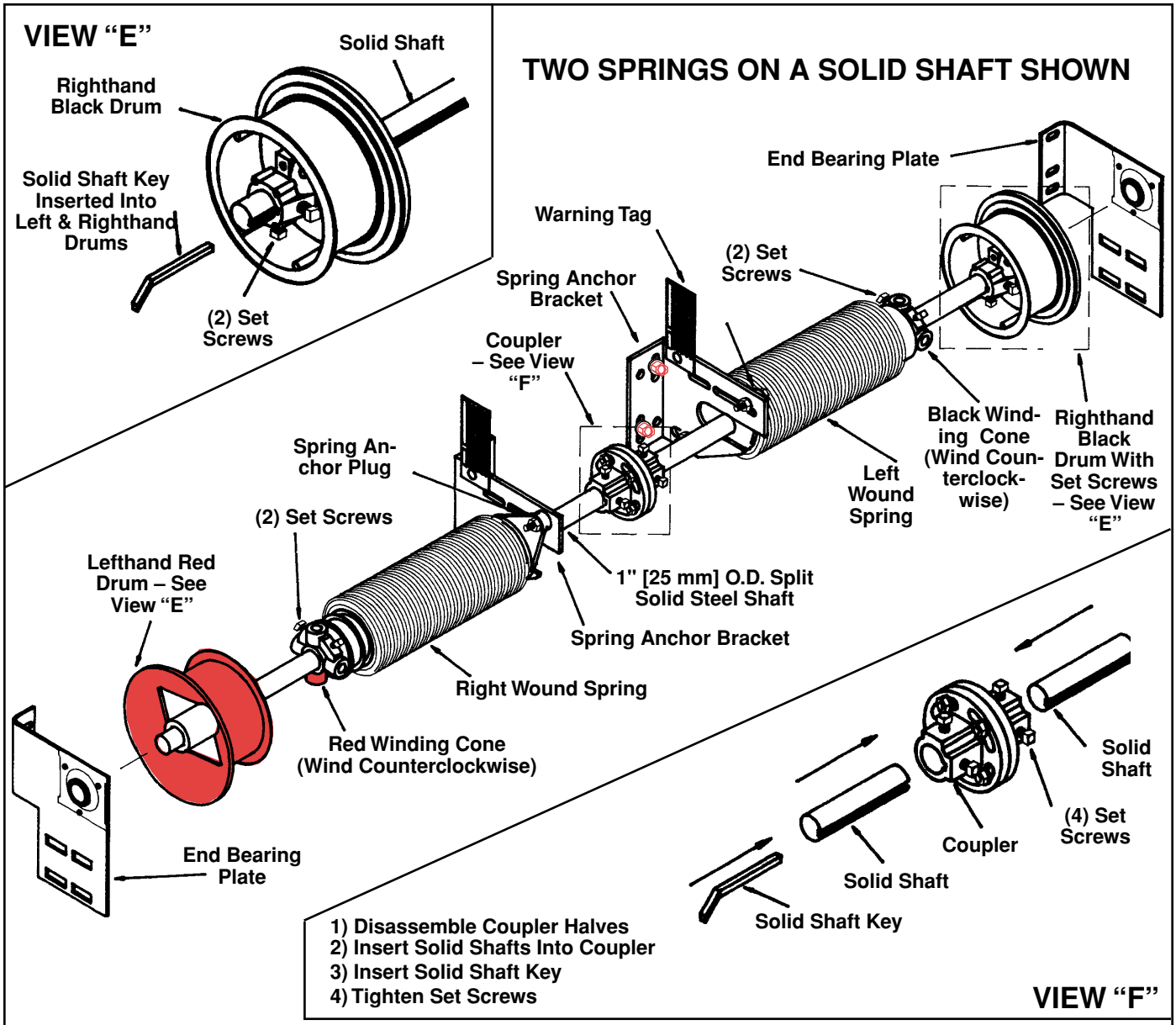

HEAVY DUTY BEARING MOUNTING SYSTEM (Used for special applications)

Step 1: Attach heavy duty bearing to end bearing plate with (4) $^3/_8$" [10 mm] bolt and nut—making sure that bolt head is toward cable drum as shown in diagram.

Step 2: Slide cable drum, then spacer, and then bearing plate (with attached bearing) onto the shaft.

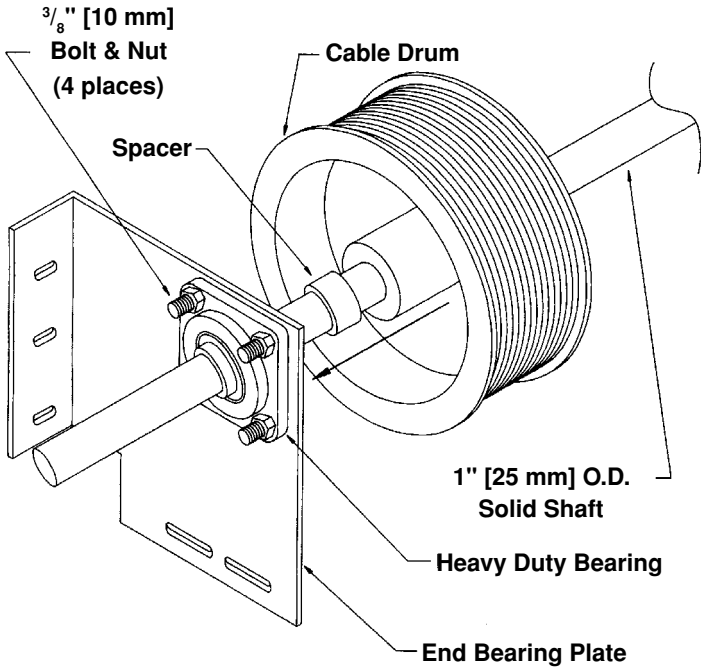

Fig. 2-TOR

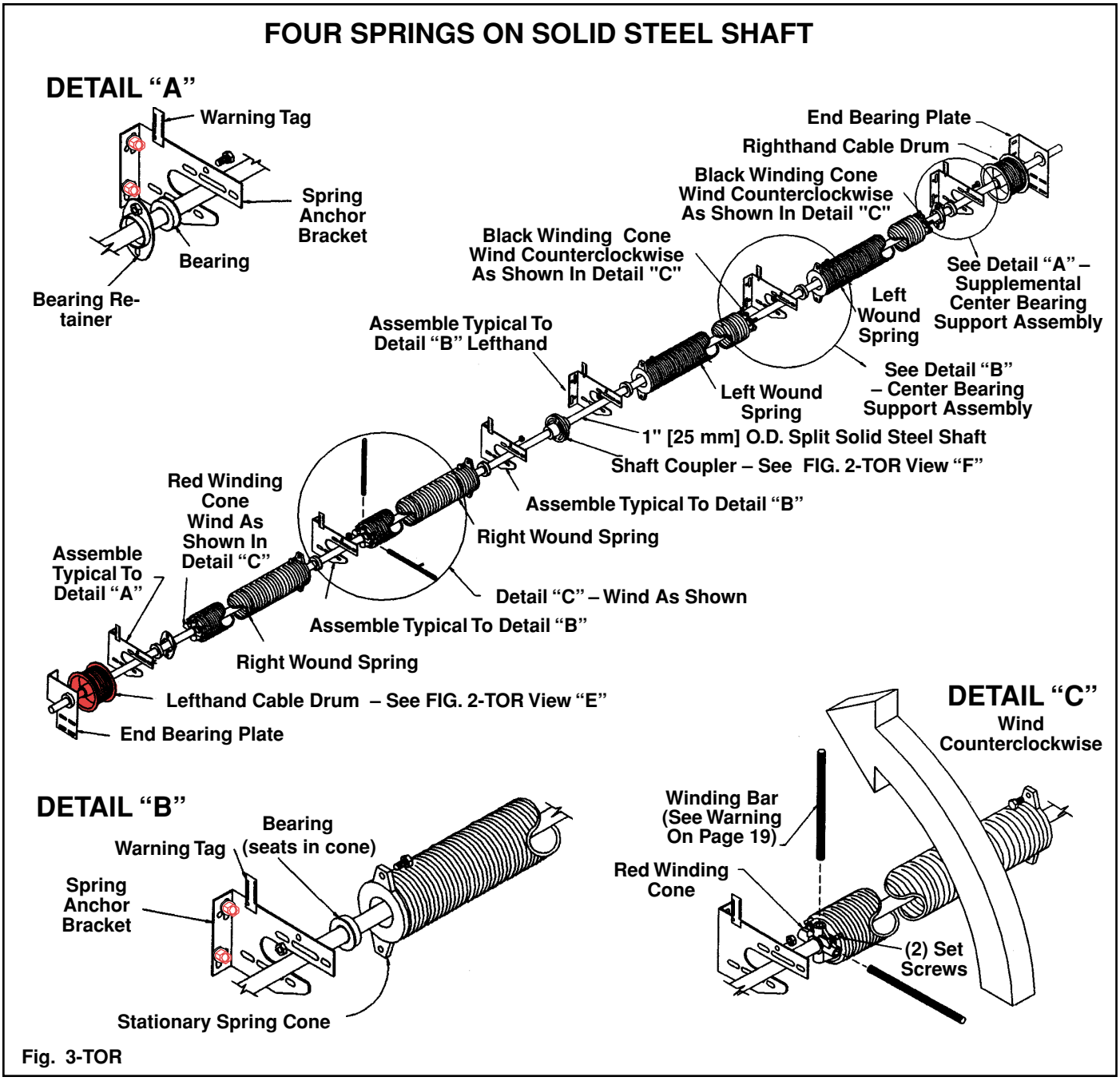

Fig. 3-TOR

Final Adjustment and Maintenance

Inside Slide Lock will be installed on the #2 section on preferred side. Line up the lock rod with the lock hole in the track (FIG. 9-S, page 12) making sure that when lock is in the unlocked position it doesn't extend past the end stile. Fasten lock to the end stile using (4) #14 x $^5/_8$" [6 mm x 16 mm] sheet metal screws. Lubricate all moving parts (hinges, rollers, bearings, springs, etc.) with light weight oil. Do so when installed and thereafter about every six months. High use doors will require more frequent lubricating.

Every six months inspect your door for the following:

WARNING

Do not attempt to adjust door components unless you are a qualified door mechanic.

- Cables for fraying
- Torsion spring plugs and spring anchors
- Bearings in end bearing plates
- Rollers and hinges
- Track alignment
- Backhang angle and sway brace attachments
- Tighten all screws and nuts on bolts

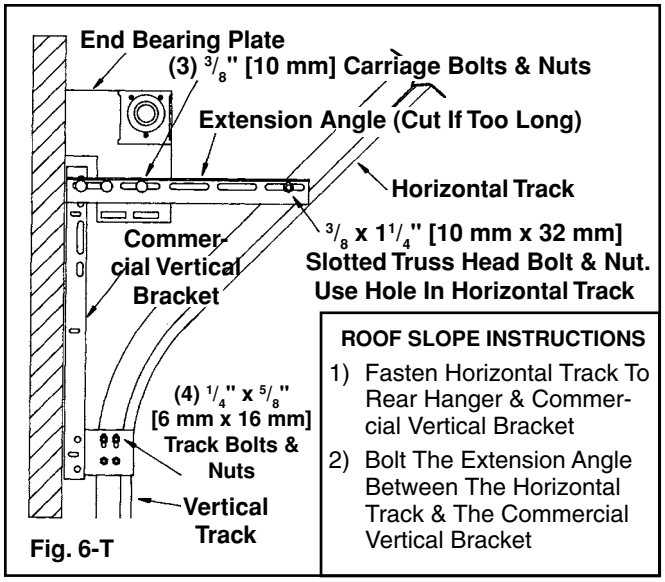

Fig. 6-T

Roof Pitch

Horizontal track follows the pitch of the roof line. Track is assembled similar to standard lift, except that the horizontal angle is mounted level just above the radius. (FIG. 6-T) Everything is put together the same as type of track ordered. Installation follows standard radius track procedure.

Low Headroom Double Track (LHR)

LHR can be installed rear torsion (springs at back of horizontal track) up to a maximum door weight of 800 lbs., [363 kg] after that, it must be installed front torsion up to 1,200 lbs. [544 kg]. Front torsion is much easier to install, but it requires more headroom and the door will hang in the opening unless an electric operator is used.

The door hardware for LHR is the same as for standard radius except special outside bottom brackets are used to allow cable to ride on the outside of the track and the top bracket is flat with the top roller being the only one riding in the top track. (FIG. 7-T)

Install low headroom bottom brackets and cable using red-colored fasteners. (FIG. 8-T)

All struts will be applied according to strutting schedule on page 9, except the top strut will follow instructions below.

Top Section Strutting Procedure for LHR

With the top section face down on saw horses, place strut on top of section (section should be flat). Position top edge of strut approximately 1" [25 mm] down from top of door. At each center stile, fasten strut to center stile with (2) #14 x 5/8" [6 mm x 16 mm] self-drilling screws. The ends of the struts will require fastening in the same manner as the center stiles after the section has been installed and top brackets have been installed and adjusted.

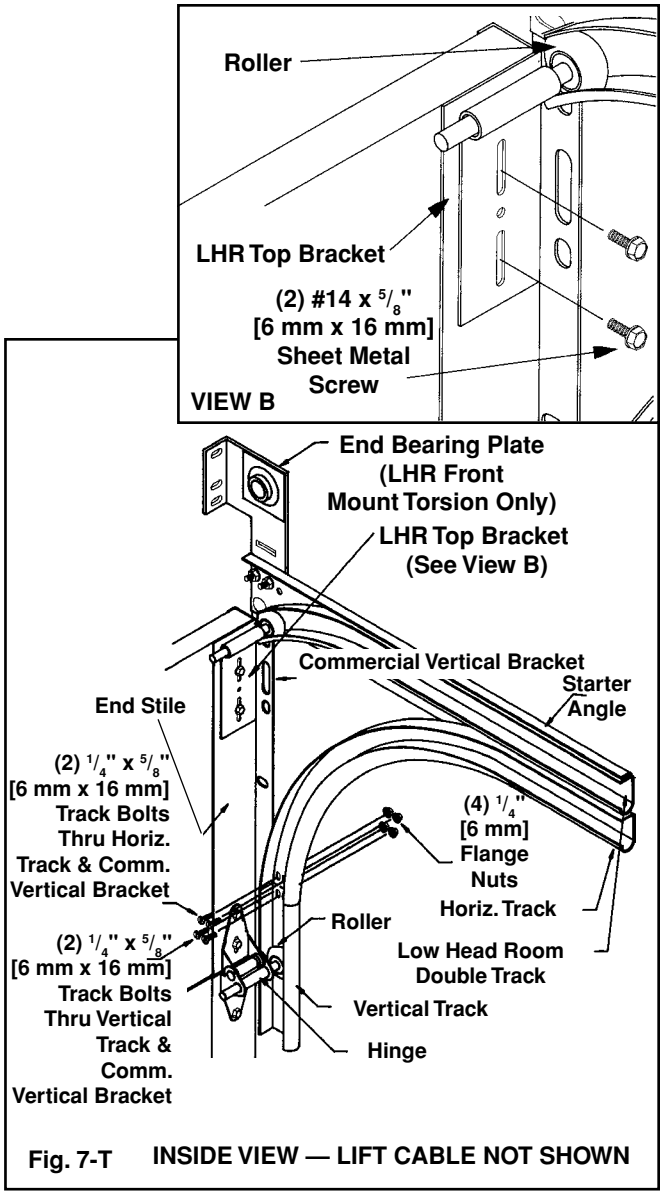

Fig. 7-T INSIDE VIEW — LIFT CABLE NOT SHOWN

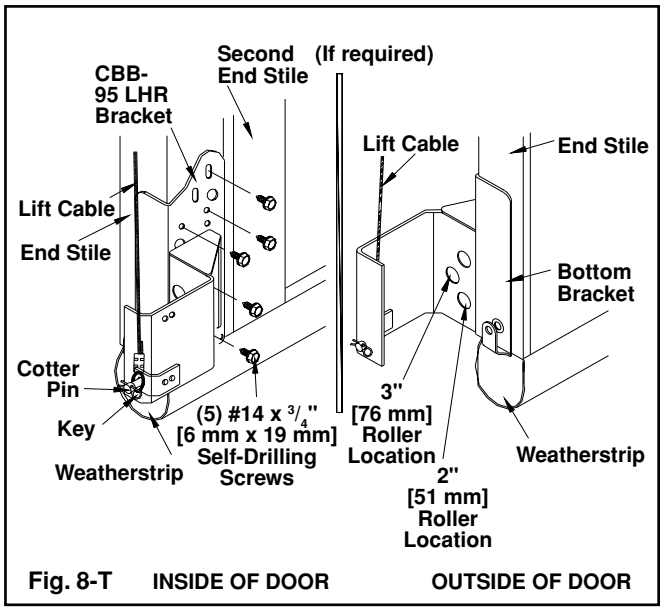

Fig. 8-T INSIDE OF DOOR OUTSIDE OF DOOR

Low Headroom Top Brackets

All Door Models: Insert rollers in low headroom top brackets. On each side of door, insert each roller into the top horizontal track. Slide each low headroom top bracket down the top section until top section is tight against wood stop or steel jamb. If a top strut has been installed the top bracket will have to be placed between stile and strut. Line each low headroom top bracket up with the side of the top section. Using both slots in each low headroom top bracket as a guide, drill $^{3}/_{16}$" [5 mm] pilot holes in the center of each slot leaving room for final adjustment in both directions.

Steel Door Models: Attach each low headroom top bracket with two #14 x $^{5}/_{8}$" [6 mm x 16 mm] sheet metal screws. (FIG. 7-T, page 23)

Rear Mount Torsion Spring Doors

Attach horizontal track to vertical bracket using $^{1}/_{4}$" x $^{5}/_{8}$" [6 mm x 16 mm] track bolts and flange nuts. Attach horizontal angle to the vertical angle using $^{3}/_{8}$" x $^{3}/_{4}$" [10 mm x 5 mm] carriage bolts and flange nuts. The end bearing plate will be positioned and fastened as shown in Figure 9-T. Some drilling in end bearing plate and horizontal angle may be required.

For doors under 350 pounds [159 kg], install the 4" [102 mm] pulley as illustrated in Figure 9-T, View A-2. For doors over 350 pounds [159 kg], install the 5" [127 mm] pulley and saddle as illustrated in Figure 9-T, View A-1. The carriage bolts used must be installed with the heads toward the inside of the track and the nuts facing outside as in the illustration. The cable must be routed through the pulley saddle prior to attaching to drum.

Rear torsion spring doors will require that springs be placed at rear of track and a center support hanger(s) be provided that is strong enough to withstand the torque of the springs. Rear of horizontal tracks must be securely fastened in the proper position before springs are wound or door is lifted. Doors over 12' [366 cm] high will require two backhangs for each horizontal track. Horizontal tracks should be level and backhung according to Figure 9-T. (See important note on page 17 for additional backhang requirements.) All backhang material is supplied by installer due to ceiling height differences.

Install springs according to Figure 10-T and wind. See spring winding on page 18 for more information. Push track towards jambs until door is tight against stop or steel jambs and tighten track bolts. Adjust top brackets (FIG. 7-T, page 23) by sliding it up or down on door in order to position top section correctly.

Install the inside slide lock or lock bars (page 12) after springs are wound. Nail door stop in place if applicable.

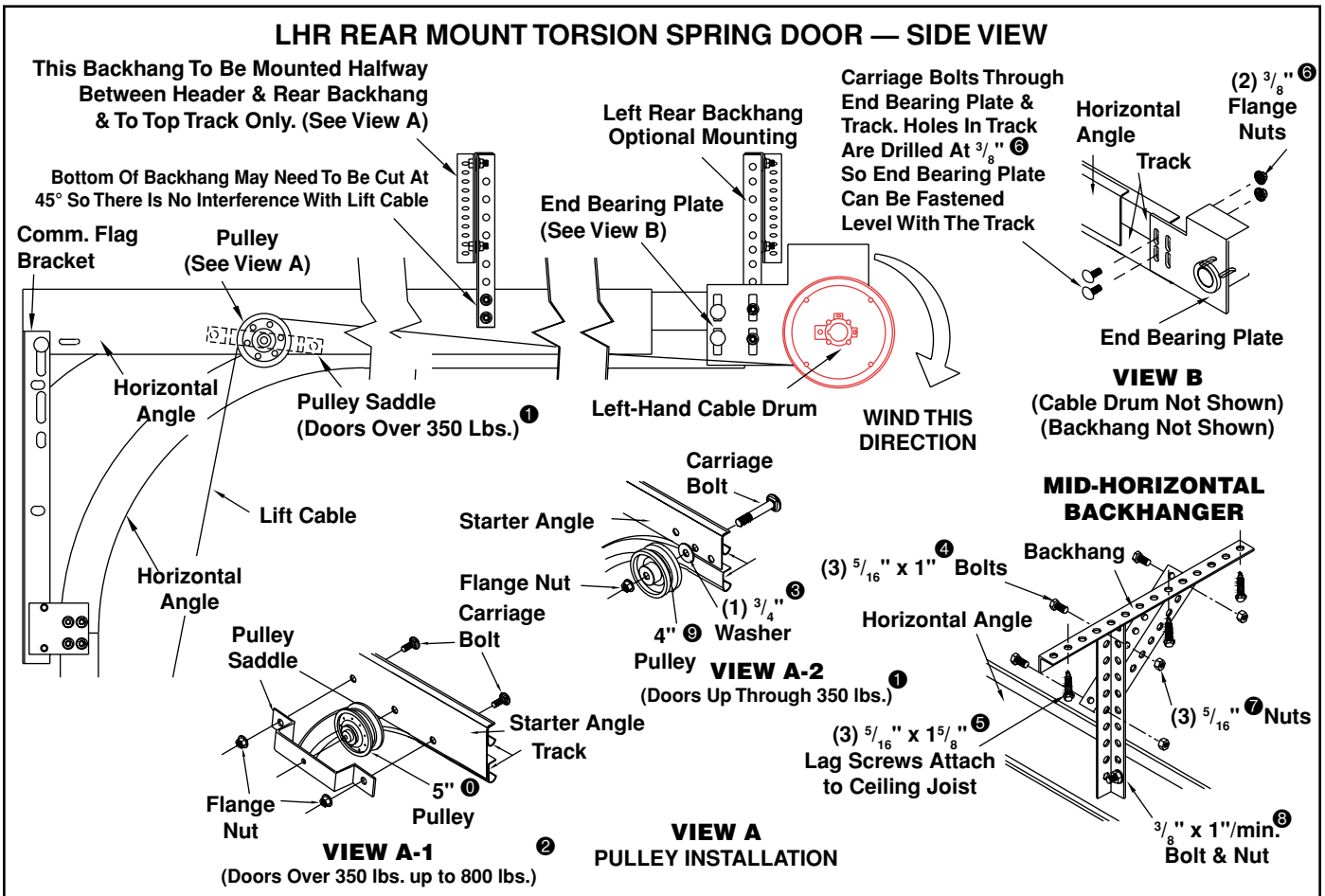

⓪ [127 mm] ❶ [159 kg] ❷ [159 kg up to 363 kg] ❸ [19 mm] ❹ [16 mm x 25 mm] ❺ [16 mm x 41 mm] ❻ [10 mm] ❼ [16 mm] ❽ [10 mm x 25 mm] ❾ [102 mm]

Fig. 9-T

LHR REAR MOUNT TORSION SPRING DOOR — REAR VIEW

Left Rear Backhang
Center Rear Backhang
Right Rear Backhang
Left End Bearing Plate
Spring Anchor Bracket
Right End Bearing Plate
Left (Black) Winding Cone
Left Wound Spring
Spring Anchor Cones
Right Wound Spring
(Red) Right Winding Cone
(Black) Right Hand Cable Drum— See View D below
(Red) Left Hand Cable Drum— See View C below

Fig. 10-T

(3) $^{5}/_{16}$" x $1^{5}/_{8}$" [16 mm x 41 mm] Lag Screws
(Attach to Ceiling Joist)
(5) $^{5}/_{16}$" x 1" [8 mm x 25 mm] Bolts & Nuts
Center Backhang
Spring Anchor Bracket Spring
Anchor Cone

CENTER EXPLODED VIEW

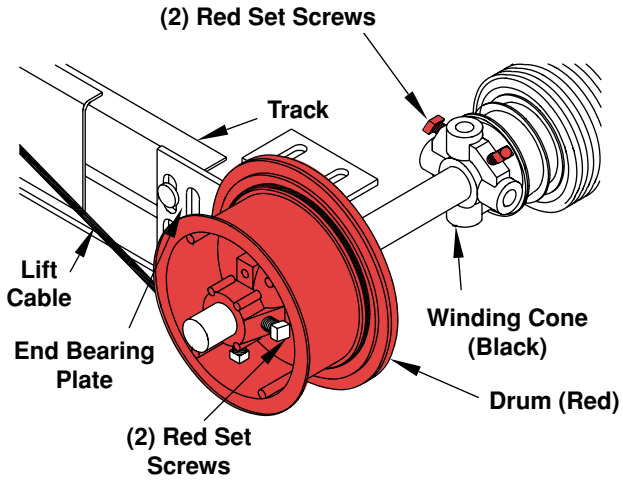

LEFT HAND CABLE DRUM EXPLODED VIEW
(Backhang Not Shown)

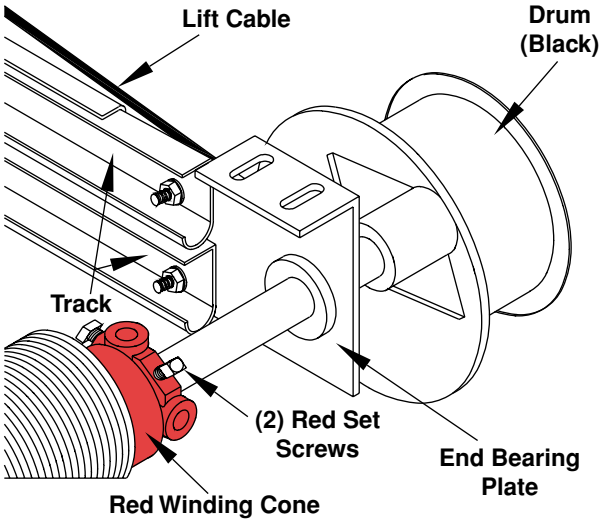

RIGHT HAND CABLE DRUM EXPLODED VIEW
(Backhang Not Shown)

LHR Front Mount Torsion Spring Doors

Attach horizontal track to vertical bracket using $^1/_4$" x $^5/_8$" [6 mm x 16 mm] track bolts and flange nuts. Attach vertical angle to horizontal angle using $^3/_8$" x $^3/_4$" [10 mm x 19 mm] carriage bolts and flange nuts. The end bearing plate will be positioned and fastened as shown in Figure 11-T. Some drilling in horizontal angle may be required. (FIG. 7-T, page 24)

Install springs according to Figure12-T, and wind. See spring winding on page 19 for more information.

Raise door so that only two sections are in the horizontal tracks. Align horizontals so that spacing is equal from front to back. Backhang door as shown in Figure 6-T. **(See important note on page 17 for additional backhang requirements.**) Raise door all the way and check for proper track alignment. Realign horizontal track if required.

Push track (if adjustable) towards jambs until door is tight against stop or steel jambs and tighten track bolts. Adjust top brackets by sliding it up or down on door in order to position top section correctly. (FIG. 7-T) Install the inside slide lock or lock bars (page 12) after springs are wound. Nail door stop in place if applicable.

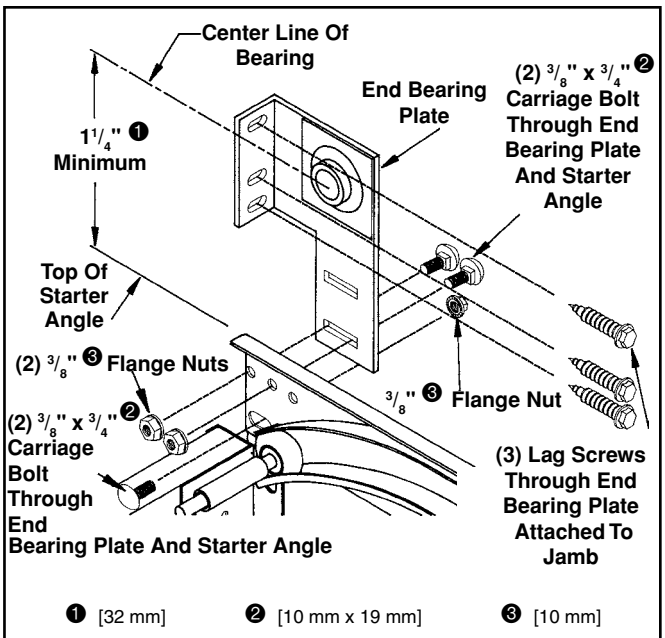

Fig. 11-T END BEARING PLATE INSTALLATION

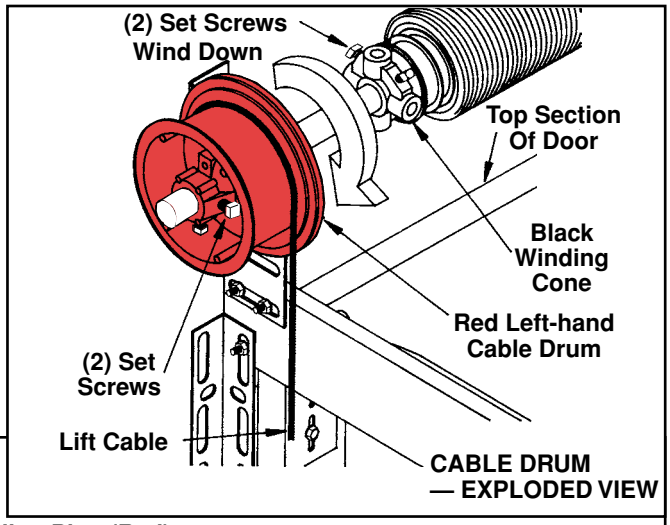

LHR FRONT TORSION SPRING DOORS

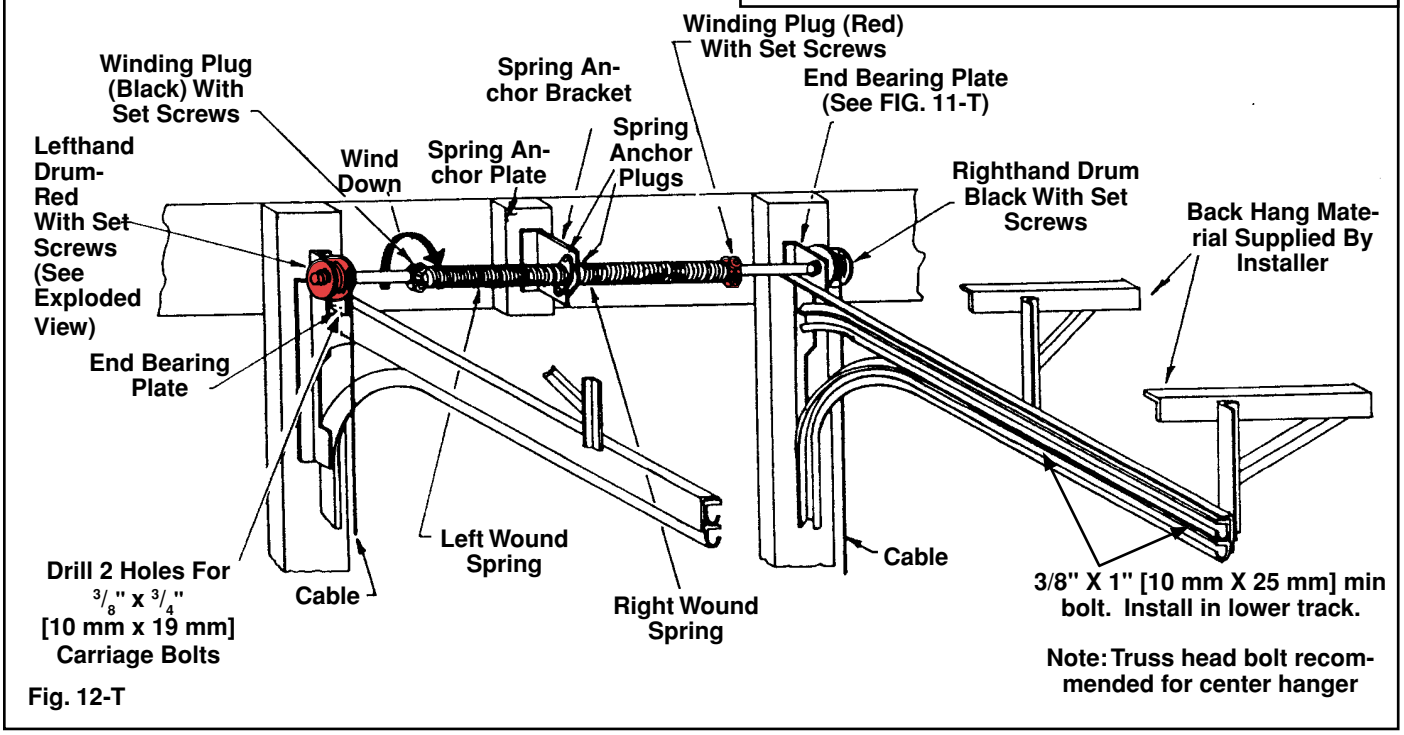

Fig. 12-T

Vertical Lift Track

Vertical lift tracks are built as one piece or as two pieces per side, depending on door height. Follow the vertical track information (Step 1, page 15) for the lower part of the track, from the floor to the top of the door.

Starting at the top of the door, plumb one track and lag or screw it to the wall all the way up. Measure the width of the tracks at the top of the door and set the very top of the second vertical track at the exact same distance. Finish fastening the center of the vertical track, making sure the distance between the tracks is equal from the top of the door on up. Install top section to other sections. (FIG. 10-S, page 12)

Attach the bearing plates as shown in Figure 13-T. See spring winding information, page 19 for installing and winding springs.

IMPORTANT: Do not cut cables. It may seem like the cables are too long, but they are not. Wind the extra cable onto the drums.

All vertical lift doors must be sway braced as in Figure 13-T.

WARNING

Door may fall out of track if the track is improperly aligned.

Attach spring bumpers as shown in Figure 14-T. They will keep door from coming out of top of the track. Position bumpers so that door clears the opening and drill in place using $^{5}/_{16}$" x 1" [8 mm x x25 mm] hex head bolts to fasten.

WARNING

Door may come out of track if spring bumper is not installed.

Push lower vertical track towards jambs until door is tight against stop or steel jambs and tighten track bolts. Adjust the bottom of the upper vertical track to align with the top of the lower vertical track and tighten the track bolts.

Adjust top brackets. (FIG. 10-S, page 12) Install inside slide lock or lock bars after springs are wound. (FIG. 8-S & 9-S, page 12) Nail door stop in place if applicable.

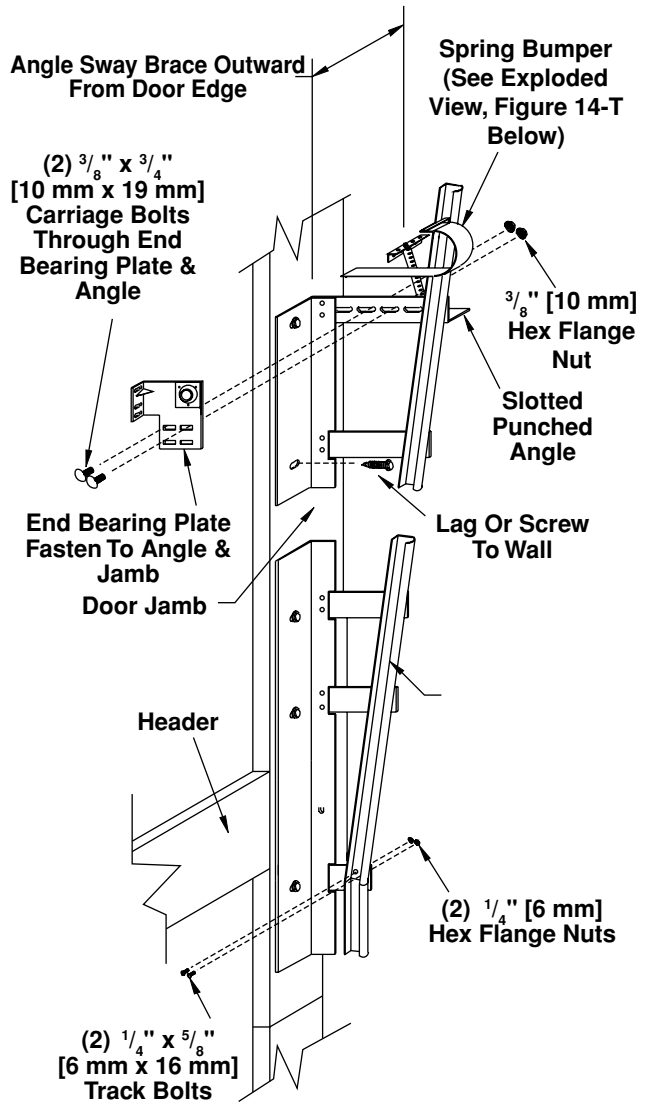

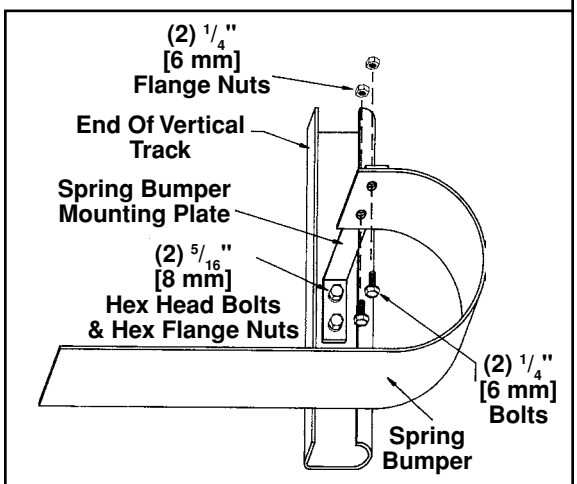

Fig. 14-T EXPLODED VIEW

Fig. 13-T

High Lift Track

Some smaller high lift doors will come with vertical tracks in one piece plus the horizontal tracks. Larger high lift doors will have the vertical track in two pieces plus the horizontals. Follow the vertical track information (Step 1, page 15) for the lower part of the track from the floor to the top of the door. Starting at the bottom of the door, plumb one vertical track and lag or screw it to the wall all the way up. Measure the width of the tracks at the top of the door and set the very top of the second track at the exact same distance. Finish fastening the center of the vertical track, making sure the distance between the tracks is equal from the top of the door on up. Attach the horizontal tracks using $^1/_4$" x $^5/_8$" [6 mm x 16 mm] track bolts and $^3/_8$" x $^3/_4$" [10 mm x 19 mm] carriage bolts to attach the horizontal angle. Rig a temporary rope to support back of horizontal tracks. They should be level (parallel) to 1" [25 mm] higher in back. Attach the bearing plates as shown in Figure 15-T. Install top section to other sections. (FIG. 10-S, page 12) See spring winding information for installing and winding springs.

IMPORTANT: Do not cut cables. It may seem like the cables are too long, but they are not. Wind the extra cable onto the drums.

After the springs have been installed and wound, raise the door so that only the two top sections are in the horizontal track. Secure the door in place with locking pliers on track above a roller making sure it can't be raised. Backhang doors as shown in Figure 17-T. Any door with a horizontal track 11' 6" [350 cm] long or longer requires two backhangs on each horizontal track. (FIG.5-T) (See important note page 17 for additional backhang requirements.) Attach spring bumpers as shown in Figure 16-T. They will keep the door from coming out of the back of the tracks. Push the door against the stop or steel jambs and tighten track bolts. Adjust top brackets. (FIG. 10-S, page 12) Install inside slide lock or lock bars after springs are wound. (FIG. 8-S & 9-S, page 12) Nail door stop in place if applicable.

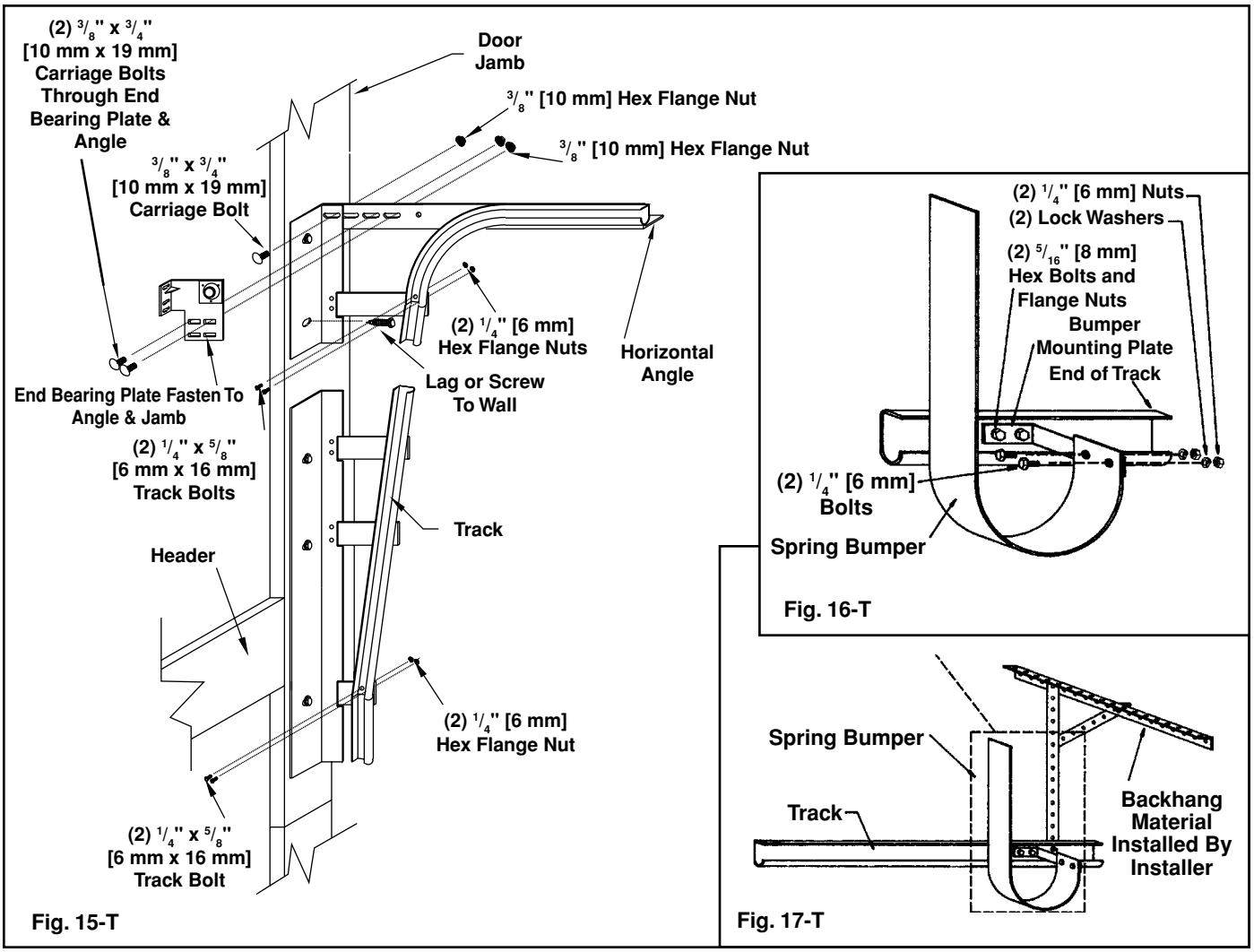

Attaching an Automatic Opener

WARNING

To avoid risk of strangulation or personal injury to children, you must remove the pull down rope when you install an automatic garage door operator.

NOTE: Failure to reinforce the door as illustrated will void Clopay Warranty.

Doors with a stile at center of door:

- You will need three pieces of 14 gauge 2" x 2" [51 mm x 51 mm] punched angle iron. Two pieces should be 8 ft. [244 cm] long and one at least 24" [610 mm] long. The 24" [610 mm] piece may have to be trimmed to fit your door.
- Remove the fasteners from the top half of the three top section hinges closest to, or at, the center of the door. One 8 ft. [244 cm] piece of angle iron is to span across these three hinges and attached using fasteners previously removed.
- Place remaining 8 ft. [244 cm] piece across the top of the section, bridging across the same three stiles as the bottom angle. Attach with fasteners similar to ones used with the hinges. One fastener per stile. If your door has a strut at the top of the section, remove the bottom strut fasteners and overlap the flange of the strut with the angle iron to secure the bottom of the strut. Attach angle using the fasteners removed with the strut (FIG. 1-OP) Refer to Figure 3-OP for C-Channel.
- Cut the 24" [610 mm] piece of punched angle iron to span from top horizontal angle to bottom horizontal angle. Place vertical angle directly above stile in the center of the door. Attach vertical angle through both the top and bottom horizontal angles to the stile beneath with fasteners similar to ones used with the hinges.

Doors without stile at center of door:

- You will need three pieces of 14 gauge 2" x 2" [51 mm x 51 mm] punched angle iron. Two pieces should be 4 ft. [122 cm] long and one at least 24" [610 mm] long. The 24" [610 mm] piece may have to be trimmed to fit your door.

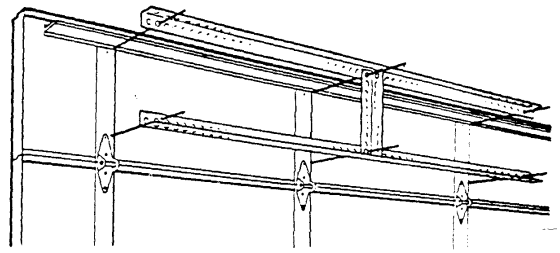

Fig. 1-OP

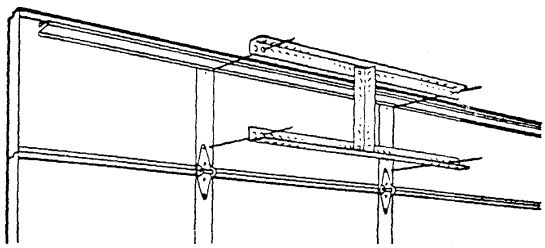

Fig. 2-OP

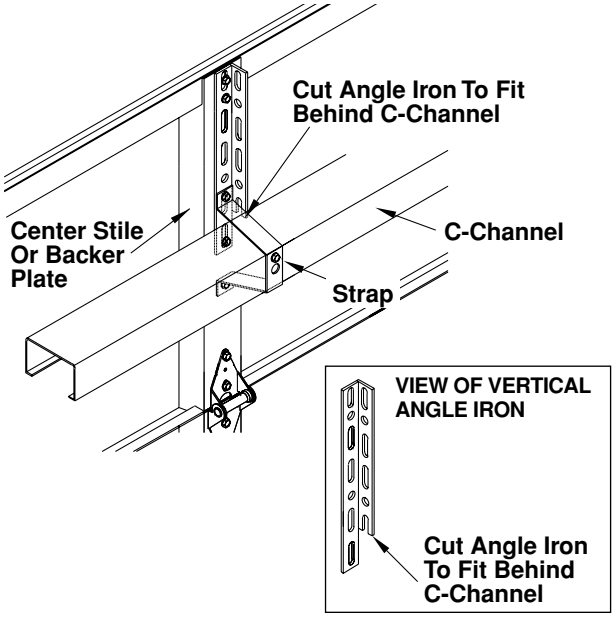

Fig. 3-OP OPENER REINFORCEMENT ASSEMBLY FOR C-CHANNEL DOORS

- Remove the fasteners from the top half of the two top section bottom hinges closest to the center of the door. One 4 ft. [122 cm] piece of angle iron is to span across these two hinges and is attached using fasteners previously removed.
- Place remaining 4 ft. [122 cm] piece across the top of the section, bridging across the same two stiles as the bottom angle. Attach with fasteners similar to ones used with the hinges. One fastener per stile. If your door has a strut at the

top of the section, remove the bottom strut fasteners and overlap the flange of the strut with the angle iron to secure the bottom of the strut. Attach angle using the fasteners removed with the strut. (FIG. 2-OP)

- Cut the 24" [610 mm] piece of punched angle iron to span from top horizontal angle to bottom horizontal angle. Place vertical angle directly in the center of the door. Attach vertical angle to both the top and bottom horizontal angles with two $^3/_8$" [10 mm] nuts and two $^3/_8$" [10 mm] bolts. Refer to Figure 3-OP for C-Channel.

Attach the operator arm of garage door opener to the short vertical angle. The operator arm must be attached roughly at the same height of the top rollers of the door.

Painting and Windows

Do not use any type of oil based paint or Alkyd modified acrylic latex paint. These paints will void the warranty of your door.

PAINTING

Cleaning: Before painting your door, it must be free of dirt, oils, chalk, waxes and mildew. The prepainted surfaces can be cleaned of dirt, oils, chalk and mildew with a diluted solution of trisodium phosphate. Trisodium phosphate is available over the counter at most stores under the name SOIL-AX®, in many laundry detergents without fabric softener additives, and in some general purpose cleaners. Check the label for trisodium phosphate content. The recommended concentration is $^1/_3$ cup [79 ml] of powder to $1^1/_2$ to 2 gallons [6 l to 8 l] of water. After washing the door, always rinse well with clear water and allow to dry.

If the door has ever been waxed, the wax must be removed before painting. Doors are not waxed during the manufacturing process. This can be accomplished by wiping the door surface with a rag saturated with Xylene (Xylol), available at most paint or hardware stores. Wiping should be done at moderate pressure and Xylene must not be allowed to sit on the door for an extended time. Damage to your door's paint system can occur if overexposed to this or other solvents.

Caution: Safety instructions on the solvent's container must be followed. After de-waxing the door, clean with trisodium phosphate, as stated previously.

NOTE: Sanding could remove rust-inhibiting compounds, therefore, sanding should be done only to damaged areas where bare metal has been exposed. Refer to the **"Repair"** section of these instructions.

Repair: Should your door's paint finish become damaged, exposing the bare metal, it will become necessary to repair this area to prevent rust from forming. The damaged area should be lightly sanded with a medium to fine sandpaper making sure to remove all visible red and white rust. Wipe this area with a dry, clean rag. Coat the sanded area with a high quality, rust inhibiting, zinc enriched primer. This type of primer can be found at most paint or hardware stores, and should be labeled for covering bare and galvanized steel. Once the primer is applied, wait the time specified on the primer's instructions before you finish painting your door.

Paint: Your steel garage door can be painted with a high-quality flat latex exterior grade paint. Since all paints are not created equal, the following test needs to be performed: paint should be applied on a small area of the door (following the instructions on the paint container), allowed to dry, and evaluated prior to painting the entire door. Paint defects to look for are blistering and peeling. An additional test is to apply a strip of masking tape over the painted area and peel back, checking to see that the paint adheres to the door and not to the tape.

After satisfactorily testing a paint, follow the directions on the container and apply to the door. Be sure to allow adequate drying time should you wish to apply a second coat.

With the exception of rubber gasket windows, window frames & inserts can be painted with a high quality latex paint. The plastic should first be lightly sanded to remove any surface gloss.

NOTE: Do not apply paint when door surface temperature is different from manufacturer's suggested temperature range for application.

WINDOWS WITH SCREW-DOWN FRAMES

WARNING

To avoid injury, use extreme caution in handling glass window pane. When the frame is removed, the exposed steel edge of the door may be sharp. Avoid contact with the steel edges.

Glass Replacement: If your door is equipped with windows and the glass should need replacement, follow the steps below:

1) With someone holding the outside frame, remove the ten screws from the inside window frame.

2) Pull the inside frame out of the door.

3) **Carefully** remove the broken or old glass.

4) Insert the new (replacement) glass.

5) With someone holding the outside frame, reinsert the screws into the inside frame, trapping the glass.

Quick Turn Bracket

(Reduces headroom requirement by 2" [51 mm]. Quick turn bracket cannot be used in conjunction with any other low headroom option.) This is used in place of the existing top roller brackets.

1. Place two rollers in the tubes as shown. On some doors it will be necessary to try various roller positions to achieve the proper hinge location on the door. (FIG. 1-LHR)
2. Position the rollers and the bracket in the door track. Allow the hinged end of the bracket to come against the door. Apply sufficient pressure to be sure that the top of the door is closed tightly against the header.
3. Attach to the top of the door in the same manner as the original top roller bracket.
4. It may be necessary to relocate holes.

Pass Door Installation

NOTE: Proper alignment of the pass door frame is critical for smooth operation of the pass door. After stacking the bottom section, measure the pass door frame opening at the top and bottom of the frame (Figure 3-PD). If this measurement is not exactly the same, the bottom section will need to be shimmed or clamped so that the frame is aligned.

See Figure 1-PD (Deep Ribbed Steel Doors) or Figure 2-PD (Double Skinned Insulated Doors) for diagram of pass door showing hinge and closer locations. The strut schedule for pass doors follows the strut schedule on page 9, minus 2 struts.

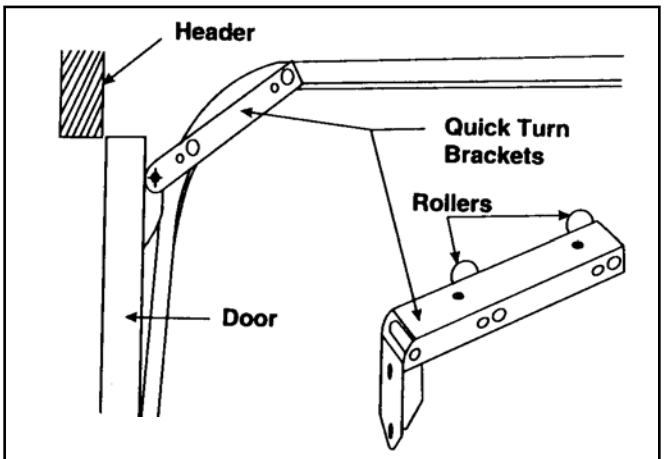

Fig. 1-LHR

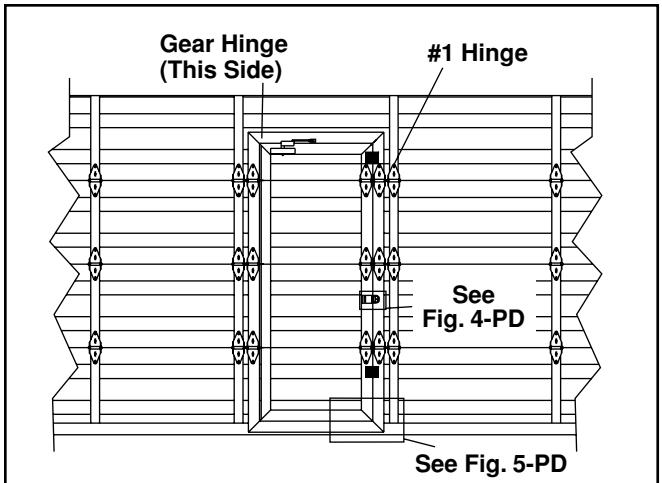

DEEP RIBBED STEEL PASS DOOR
(Pass Door Shown Is Left Hand Door Swinging Out)

Fig. 1-PD

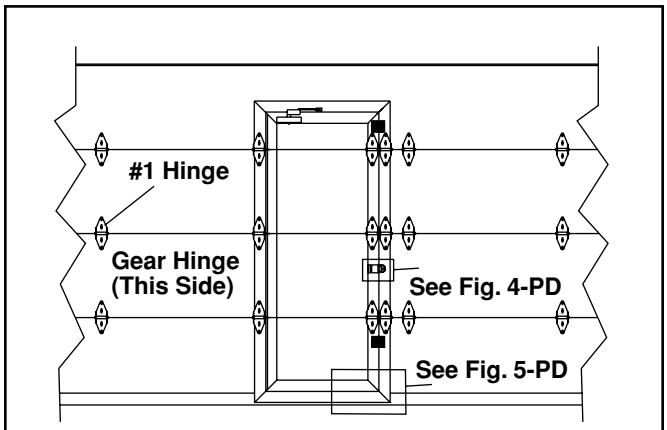

DOUBLE SKINNED INSULATED PASS DOOR
(Pass Door Shown Is Left Hand Door Swinging Out)

Fig. 2-PD

NOTE: Swinging portion of Pass Door on bottom section may need to be shimmed up during installation of upper sections to prevent gapping. (FIG. 5-PD)

NOTE: To better ensure proper alignment of the frame from section to section, install the center hinges on the gear hinge side of the aluminum pass door frame first and work outwards installing hinges.

Install Lock according to Figure 4-PD.

Install closer according to the closer instructions provided.

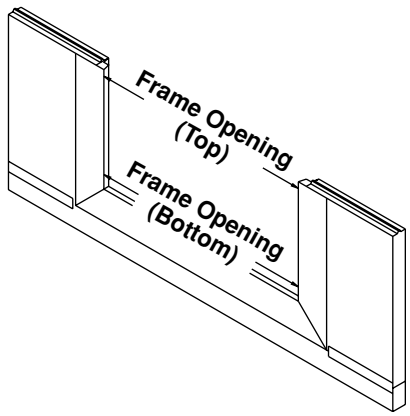

Fig. 3-PD

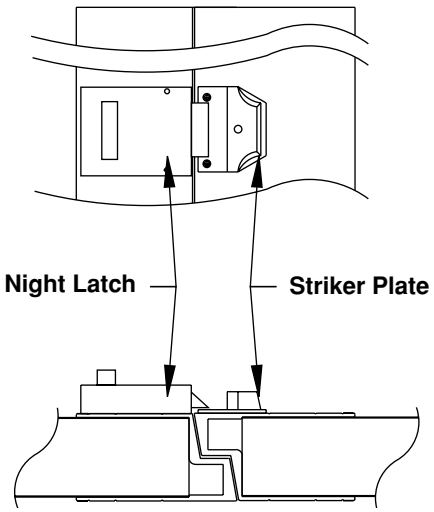

Fig. 4-PD

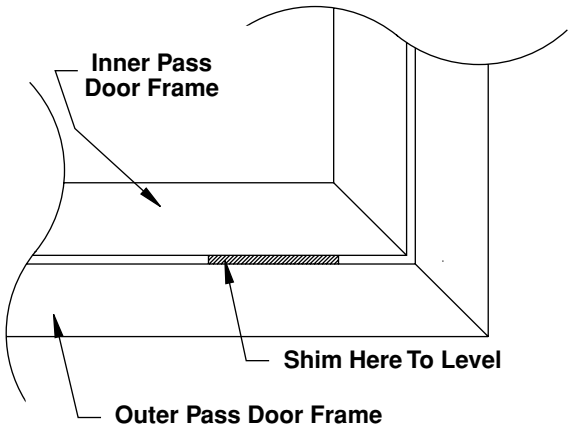

Fig. 5-PD

INSTALLATION INSTRUCTIONS
Commercial Supplemental Instructions

(For use with Commercial & Industrial Sectional Doors Installation & Maintenance Manual)

Things to Know Before You Begin

This is a supplement to the "Commercial & Industrial Sectional Doors Installation & Maintenance Manual" (Referred to as MANUAL). It covers important information on the items listed below:

1) Low Headroom Rear Torsion Cast Iron Sheave Assembly
2) Sure-Stop Bottom Bracket
3) Commercial Extension Spring Installation
4) Double Shaft Power Unit Assembly
5) Center Lift Cable Assembly.

For all other information and safety warnings concerning your Commercial Door, see the MANUAL.

Sure-Stop Bottom Bracket

Attach the bottom bracket (Figure 1). String cable through bend and attach looped end on bolt and sandwich the cable between the two washers (View C). **The track must be set ½" wider than normal installation.** In the event that the cable would break, the knife edge on the Sure-Stop Bottom bracket would flip up and grind against the outside of the track, bringing the door to a halt.

WARNING

When sure-stop bottom bracket is under high tension it could cause severe injury or death. Under no circumstances should you loosen or remove the bottom bracket without disengaging the spring tension.

For doors with Sure-Stop Bottom Bracket requiring double shaft, the upper track is to be connected to the main shaft using a chain and sprocket setup (Figure 2). Only use two cables, each attached to each Sure-Stop Bottom Bracket.

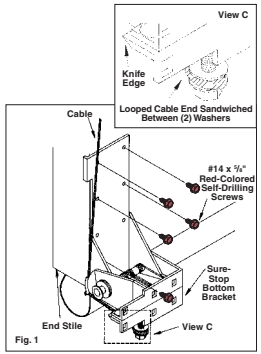

Fig. 1

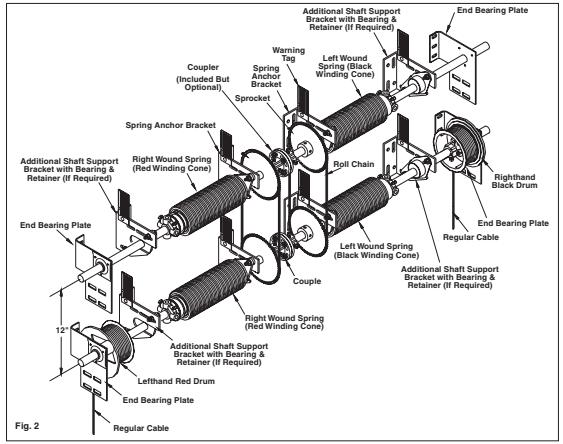

Fig. 2

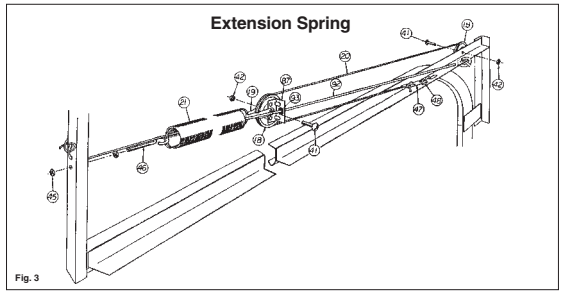

Fig. 3

Commercial Extension Spring

See Figure 3 (on page 2)

Purpose

An Extension Spring Safety Containment Kit consists of a length of aircraft cable that is threaded the length of the spring through its center. Each end is then fastened to the angle iron that is used to secure the track to the beams in the garage. In the event a spring breaks or the hook end lets go, the spring pieces are "contained" on the length of aircraft cable. Without a properly installed Extension Spring Containment Kit the spring fragments would become dangerous projectiles capable of causing serious injury.

Headroom Required

12" Radius Tracks require 10" of headroom.

15" Radius Tracks require 12" of headroom.

NOTE: Power Unit Installation to follow steps of MANUAL

Step 1

Assemble the sheaves (18) to the horizontal angles with ⅞" x 1½" slotted machine screws and nuts. The sheaves are to be mounted 3" to 4" from the wall using a round hole in the angle (not a slotted hole).

Step 2

Fasten the 5/16" x 3¾" eye bolts (46) to the track hangers in the rear as shown in the illustrations using two nuts for each.

Step 3

Assemble the springs (21) on the floor with the sheave (18) and sheave fork (19), and angle clip (87).

Step 4

Raise the door to the full open position. Place "C" clamps or locking pliers securely in the track so that the door can not come down. Check to see that the door is level and that there is approximately ½" of space between the horizontal track and the edge of the door. Adjust the track hangers if necessary and fasten them permanently.

Step 5

Hook the springs to the eye bolts at the rear.

Step 6

Thread the lift cables from the bottom corners of the door over the sheave on the horizontal angle, then over the sheave on the springs. Tie the cable to the cable adjusting clip (47) and hook to the horizontal angle with an "S" hook. The cable should be taut and hold the springs up off the door. This should be done at both sides of the door with equal tension on the springs.

WARNING

Garage door extension springs can cause serious injury and property damage if they break under tension and are not secured with safety cables. Do not neglect the following step.

Step 7

Tie one end of the ⅛" containment cable (92) to the rear track hangers. Tie the cable as shown in the illustration. Thread the cable through the center of the extension spring and through the bushing (93) in the angle clip. Tie the remaining end to the horizontal angle as shown. This is to be done for each of the springs.

Step 8

Open and close the door a few times to test operation. To adjust spring tension, raise the door to the full open position and be sure to use "C" clamps or locking pliers in the track to keep the door from coming down. Adjust the springs by taking up more or less cable at the cable adjusting clip. Maintain equal tension on both sides of the door.

Step 9

Reposition the wood door stops at the outside of the door and nail firmly in place to the jambs. Allow the thickness of a dime between the door and the door stops.

Double Shaft Power Unit

Assembly Installation

Typical Double Shaft Power Unit Assemblies come with four springs or four duplex springs. The Assembly is also available with eight springs or eight duplex springs. Place equal number of springs on each shaft as shown. (FIG. 3)

Two spring anchor brackets are always necessary. Use Additional spring anchor brackets if required. The distance between the two shafts is 12" O.C. (On Center).

There are 2 bottom bracket cable attachment points for doors using the double shaft. One application utilizes 2 points of cable attachment on the same bottom bracket (Fig 3a), the other utilizes 2 separate brackets for cable attachment; one attachment point inside and one outside the door (Fig 3b).

Inside Mount Double Shaft

For inside mount, the lower shaft (primary) is mounted and configured the same as a single shaft door (See page 21 of commercial instructions). The shorter cable is attached to this shaft and to the inboard clevis pin on the bottom bracket. The upper (secondary) shaft is positioned 12" above the primary shaft. The end bearing plate for the secondary shaft is mounted approximately 11" outboard from the end bearing plate on the primary shaft. The longer cable is attached to this shaft and to the outboard clevis pin on the bottom bracket. Repeat on the other side (Fig. 3, View A).

Outside Mount Double Shaft

For Outside mount: Attach the longer lift cable to the auxiliary lift bracket using clevis pin provided. Slit the bottom astragal to allow the short side of the bracket to go through the astragal. Position the auxiliary lift cable bracket over the inside stile of the double end stile. Be sure that the longer side of the auxiliary lift bracket is on the inside of the door. Fasten the bracket in place using #14x5/8" self-drilling screws. The lower shaft (primary) is mounted and configured the same as a single shaft door (See page 21 of commercial instructions). The shorter cable is attached to this shaft and to the clevis pin on the standard bottom bracket. The upper (secondary) shaft is positioned 12" above the primary shaft. The end bearing plate for the secondary shaft is mounted approximately 11" inboard from the end bearing plate on the primary shaft. The longer cable is attached to this shaft and to the auxiliary lift bracket. Repeat on the other side (Fig 3, View B).

IMPORTANT! Read and follow ALL instructions and safety warnings contained in the MANUAL concerning spring winding and installation. Be sure to prepare the top shaft first.

Center Lift Cable Assembly

Attach the center lift cable with the clevis pin on the lift cable bracket. Slot the bottom weatherstrip under the center, center stile to allow the lift cable bracket and auxiliary lift cable to go through it, being sure the long arm goes to the inside of the door. Fasten the bracket to the center, center stile at the bottom of the door with (2) #14 x 5/8" self-drilling screws. Repeat on the other side. The cables are to be on the outside of the door (FIG 3, View C).

There are two setups for center lift depending on single shaft (FIG. 3c) or double shaft (FIG. 3d).

After assembly is complete as shown, adjust the center drum left or right so that the portion of the drum that the cable will be coming from, if the door were in the full up position, is directly in line with where the cable will be attached to the bottom of the door.

IMPORTANT! Read and follow ALL instructions and safety warnings contained in the MANUAL concerning spring winding and installation. Be sure to prepare the top shaft first.

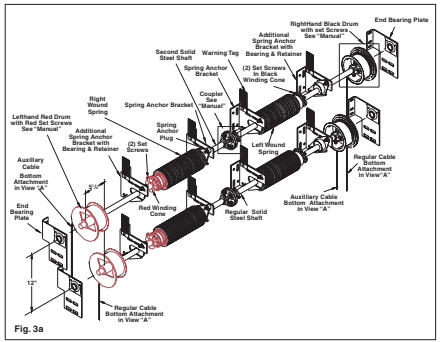

Fig. 3a

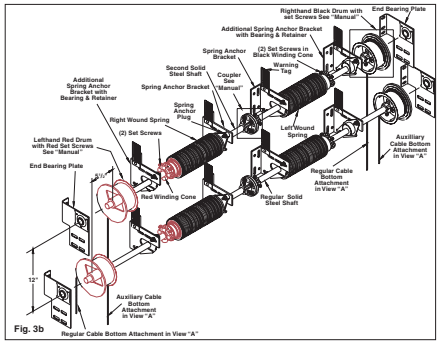

Fig. 3b

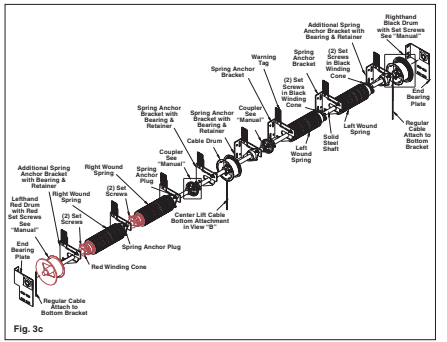

Fig. 3c

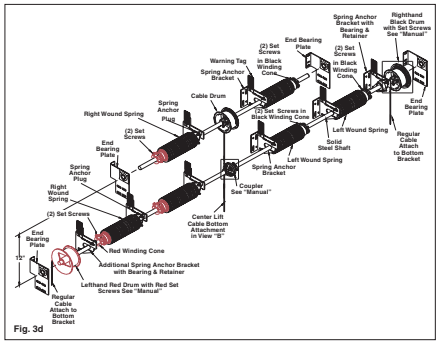

Fig. 3d

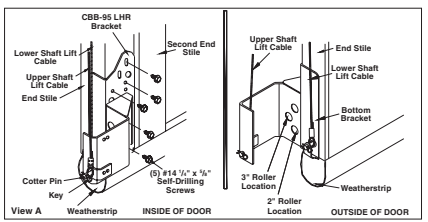

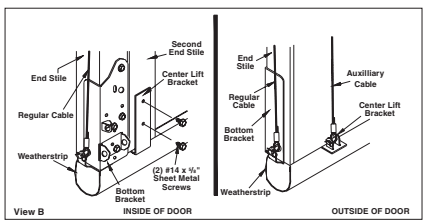

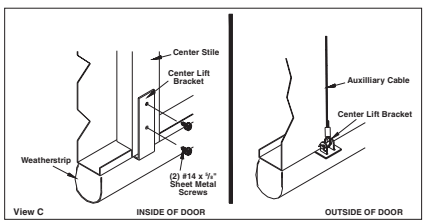

©1998 Clopay Corporation P/N 0130009

Rev. 03/03

SECTION 07411

Preformed (Manufactured) Roof & Wall Panels

PART 1 – GENERAL

1.01 SECTION INCLUDES

The work includes, but is not necessarily limited to, furnishing and installation of all preformed metal roofing, and accessories as specified herein.

1.03 SUBMITTALS

A. PRODUCT DATA
   1. Submit Manufacturer's technical product data, installation instructions for roofing and roof flashing.

1.04 QUALITY ASSURANCE

A. INSTALLER'S QUALIFICATIONS
   1. Installation of panels and accessories by installers with a minimum of 5 years experience on panel projects of this nature.

B. MANUFACTURER'S QUALIFICATIONS
   1. Manufacturer shall have a minimum of 10 years experience supplying metal roofing/siding to the region where the work is to be done.
   2. Manufacturer shall provide proof of $2,000,000 liability insurance for their metal roof system and comply with current independent testing and certification as specified. See specific product literature for testing information.
   3. Panel manufacturers without full supporting literature, Flashings & Details Guides, Guide Specifications and Technical Support shall not be considered equal to the specified product.

C. REGULATORY AGENCY REQUIREMENTS
   1. Comply with UBC and local Building Code requirements if more restrictive than those specified herein.

1.05 PRODUCT DELIVERY, STORAGE AND HANDLING

A. Protect against damage and discoloration
B. Handle panels with non-marring slings.
C. Do not bend panels.
D. Store panels above ground, with one end elevated for drainage.
E. Protect panels against standing water and condensation between adjacent surfaces.
F. If panels become wet, immediately separate sheets, wipe dry with clean cloth, and allow to air dry.
G. Remove any strippable film coating prior to installation and do not allow it to remain on the panels in extreme cold, heat or in direct sunlight.

1.06 WARRANTY

A. MANUFACTURER'S PRODUCT WARRANTY

1. Manufacturer's standard coating performance warranty, as available for specified installation and environmental conditions. (Contact an AEP Span representative to determine actual warranty criteria.)

B. CONTRACTOR'S WARRANTY
   1. Warrant panels, flashings, sealants, fasteners and accessories against defective materials and/or workmanship, to remain watertight and weatherproof with normal usage for two (2) years following Project Substantial Completion date.

PART 2 – PRODUCTS

2.01 ACCEPTABLE MANUFACTURER

A. AEP Span, A Division of ASC Profiles Inc, 2110 Enterprise Boulevard, West Sacramento, Calif 95691
   800-733-4955
   Tacoma: 2141 Milwaukee Way, Tacoma, Washington 98421

B. PANEL DESIGNATION:
   1. HR-36® Roof and Wall. Net coverage 36", rib depth 1-1/2" @7.2" o.c.

2.02 MATERIALS

A. PANELS
   1. Base Metal:
      a. Material:
         (1) Steel conforming to ASTM A792 Zincalume®/Galvalume®, minimum yield 50,000 psi, thickness [choose one] 24 gauge (standard), 22, 20, or 18 gauge (non-standard).
         (2) [For primers thicker than 0.5 mil or if gauge is 20 or 18] Steel conforming to ASTM A653 (formerly ASTM A446), G-90 Galvanized, minimum yield 40,000 psi, thickness 26 gauge.
      b. Protective Coating:
         (1) Conform to ASTM A792, AZ50 (Zincalume/Galvalume).
         (2) [For primers thicker than 0.5 mil] Conform to ASTM A924 (formerly ASTM A525) G-90 Galvanized.
   2. Exterior Finish:
      a. DuraTech®nt coating
   3. Interior Finish:
      a. Primer Coat Material: Corrosion-resistant primer; primer coat dry film thickness: 0.15 mils; finish coat material: polyester paint, finish coat dry film thickness: 0.35 mils.
   4. Color:
      a. "Weathered Copper"

B. FABRICATION
   1. Unless otherwise shown on drawings or specified herein, panels shall be full length. Fabricate flashings and accessories in longest practical lengths.
   2. Roofing panels shall be factory formed. Field formed panels are not acceptable.

PART 3 – EXECUTION

3.01 EXAMINATION

A. EXISTING CONDITIONS
   1. Inspect installed work of other trades and verify that such work is complete to a point where this work may continue.
   2. Verify that installation may be made in accordance with approved shop drawings and manufacturer's instructions.

3.02 PREPARATION

A. FIELD MEASUREMENTS
   1. Verify prior to fabrication.
   .

B. PROTECTION
   1. Treat, or isolate with protective material, and contacting surfaces of dissimilar materials to prevent electrolytic corrosion.
   2. Require workmen who will be walking on Roofing Panels to wear clean, soft-soled work shoes that will not pick up stones or other abrasive material, which could cause damage or discoloration.
   3. Protect work of other trades against damage and discoloration.

C. SURFACE PREPARATION
   1. Clean and dry surfaces prior to applying sealant.

3.03 INSTALLATION

A. PANELS
   1. Follow roof panel manufacturer's directions..
   2. Lap panels away from prevailing wind direction.
   3. Do not stretch or compress panel side-laps.
   4. Secure panels without warp or deflection.

B. ALLOWABLE ERECTION TOLERANCE
   1. Maximum Alignment Variation: 1/4 inch in 40 feet.

C. FLASHING
   2. Follow manufacturer's directions for complete installation.
   3. Overlap roof panels at least 6 inches.
   4. Install flashings to allow for thermal movement.
   5. Remove strippable protective film, if used, immediately preceding flashing installation.

D. CUTTING AND FITTING
   1. Neat, square and true. Torch cutting is prohibited where cut is exposed to final view.

2. Openings 6 inches and larger in any direction: Shop fabricate and reinforce to maintain original load capacity.
3. Where necessary to saw-cut panels, debur cut edges.

3.04 CLEAN UP AND CLOSE OUT

A. PANEL DAMAGE AND FINISH SCRATCHES

1. Do not apply touch-up paint to damaged paint areas that involve minor scratches.
2. Panels or flashings that have severe paint and/or substrate damage shall be replaced as directed by the Architect's or Owner's representative.

Note: AEP Span does not recommend touch-up painting of damaged surfaces (minor scratches, etc.) due to fading and weathering differences of the touch-up paints in comparison to factory applied paint systems.

B. CLEANING AND REPAIRING

1. At completion of each day's work and at work completion, sweep panels, flashings and gutters clean. Do not allow fasteners, cuttings, filings or scraps to accumulate.
2. Remove debris from project site upon work completion or sooner, if directed.

END OF SECTION

Table of Contents

Section Page

Notes to Designer/User 3-4
Map of Typical Roof Conditions 5
Fastener Placement 6
Fastener Selection 7

Box-Rib, Reversed Box Rib, HR-36®, Reversed HR-36®, Mini-V-Beam and Super-Span® Details

Ridge/Hip Flashing 8
Valley Flashing. 9
Eave Flashings 10
Gutter Flashings 11
Gable Flashings 12
Peak Flashing. 13
Sidewall Flashings 14
Endwall Flashing 15
Panel End Lap 16
Window/Door Trim. 17
Drip Edge/Wall Step, Panel Top 18
Inside Corner 19
Outside Corner 20

Nu-Wave® Corrugated & U-Panel Details

Ridge/Hip Flashing 21
Valley Flashing 22
Eave Flashing. 23
Gutter Flashing 24
Gable Flashing. 25
Peak Flashing. 26
Sidewall Flashing. 27
Endwall Flashing 28
Base Trim Detail 29
“C” Trim Detail 30
Inside Corner 31
Outside Corner 32

Notes to the Designer/User

The details contained in this packet are intended to be a design aid and do not depict all situations. Modifications are the responsibility of the designer/user and should take into account climate conditions such as wind and snow, governing code requirements, and the actual usage and maintenance of the structure. Where possible, roof panel side laps and flashings should be lapped away from prevailing winds. Certain flashings should be supported if it is likely that a ladder will be used against them or if foot traffic is anticipated. Check with AEP Span any time you intend to specify a prefinished flashing in a gauge different than the panels. It is good practice to specify that all flashings be of the same material as the panels (gauge, color, finish) to ensure long-term durability. Field-painted flashings rarely equal the durability and color fastness of factory baked-on paint systems. Where possible, we have hemmed the edges of flashings to strengthen them and to minimize the exposure of cut edges.

Framing- The details contained in this guide are shown with panels attached to spaced support members.

Slope requirements- It is suggested that all panels in this booklet be used on slopes of 1:12 or greater, except Nu-Wave® Corrugated and U-Panel which have a 3:12 minimum slope requirement.

Condensation, Insulation & Ventilation- It is the designer's responsibility to determine the need and composition of condensation control materials including insulation and vapor retarders, as well as ventilation requirements. Metal roofing is susceptible to condensation and its control should be carefully considered.

Valleys- Valley dimensions must be the proper width to account for slope, snow, ice, and rain conditions. If valleys are not kept free of debris, water can back up and intrusion may occur under the panels.

Snow Design- If possible, valleys, gutters, roof elevation changes and penetrations should be minimized or eliminated in snow areas. Roof penetrations should be located as close to the ridge or peak of the roof as possible to minimize accumulations of ice and snow.

Curved Roofs- Box Rib, HR-36®, Super-Span®, U-Panel, and Nu-Wave® Corrugated panels are suitable for installation over curved surfaces. Box Rib, HR-36, U-Panel and Super Span panels are factory crimp curved. Nu-Wave Corrugated panels are factory smooth curved. Mini-V-Beam panels are not available curved.

Oil-Canning- Flat metal surfaces will display waviness commonly referred to as "oil-canning". This is caused by steel mill tolerances, variations in the substrate and roofing underlayments. Oil canning is a characteristic, not a defect, of panels manufactured from light-gauge metal. Coils are factory "corrective-levelled" prior to rollforming to minimize oil canning. Oil canning is not a cause for panel rejection. Additional information is available upon request.

References- The Sheet Metal and Air Conditioning Contractors' National Association Inc. (SMACNA) manual is an excellent reference for sheet metal contractors. Its guidelines for underlayments, gutter and downspout size requirements, and expansion/ contraction of metals and flashings joints should be followed.

Technical Assistance- Call your AEP Span Sales or Technical Representative for additional information on any of these subjects.

Notes to the Designer/User *continued*

Definitions-

• Sealant: Gunnable-grade single-component polyurethane

• Mastic: Butyl mastic tape or butyl rubber

• Hem: A 180˚ bend that is closed (or as closed as the formability of the metal will allow) to provide a uniform, attractive edge. High tensile strength (Grade 80) steel must be formed with a "teardrop hem" as shown to avoid cracking the steel at the bend. Lower tensile steels can be flattened close.

• Hook: (also called an "open hem") A 180˚ bend on a piece of sheet metal that is left open to allow insertion of another piece of sheet metal. For example, the hook shown is used to hold the trim piece to a cleat below the trim.

Each flashing part in this guide has been assigned a part number. Each part number contains one or two letters followed by one or two numbers, for example: (EW6). These part numbers have been provided for you to make ordering these flashing parts quick and easy.

Map of Typical Roof Conditions

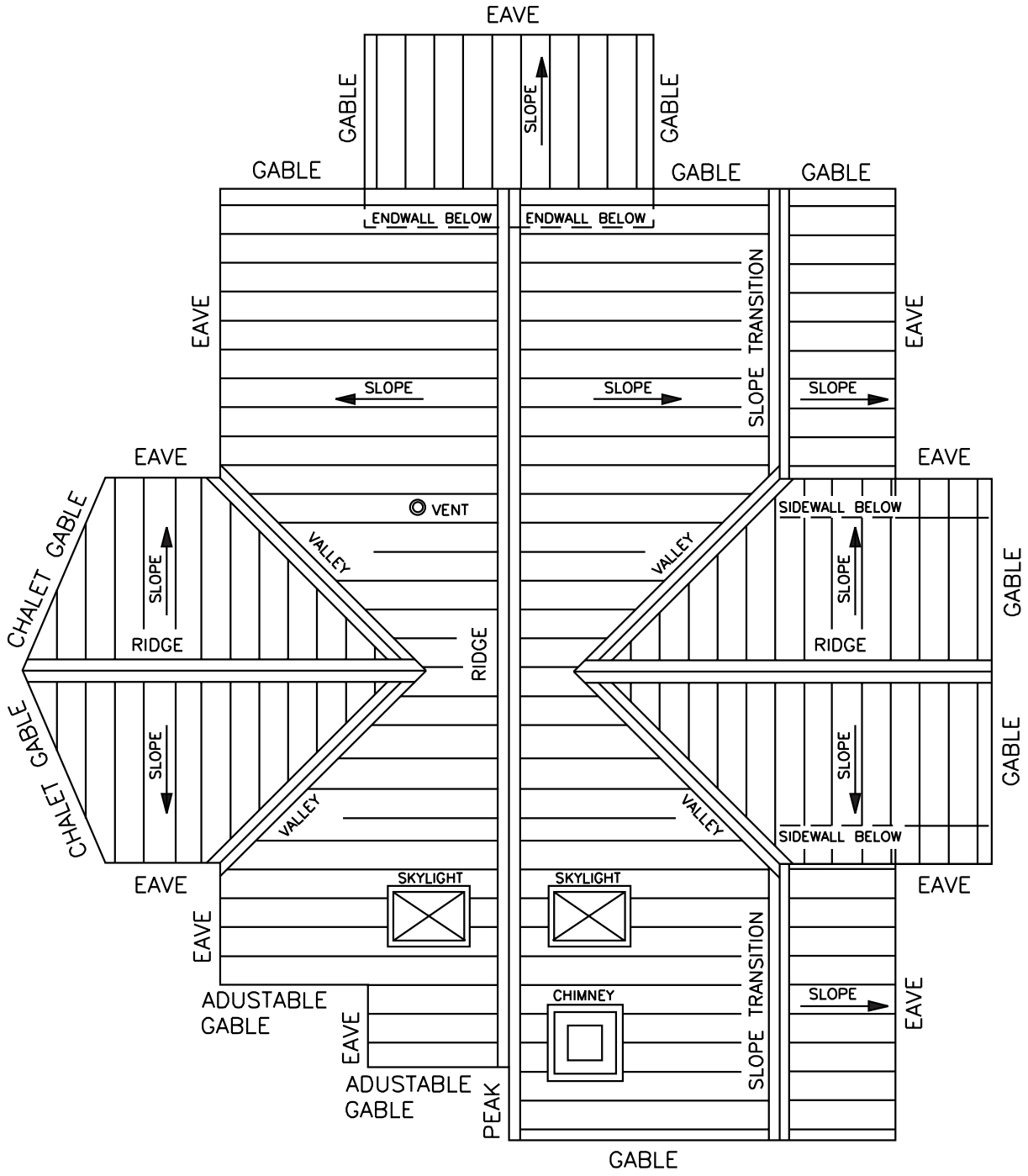

For suggestions on how to trim flashings in the different areas, please refer to the following pages:

Flashing	Page(s)
Eave	10, 23
Endwall	15, 28
Gable	12, 25
Gutter	11, 24
Panel Endlap	16
Peak	13, 26
Ridge/Hip	8, 21
Sidewall	14, 27
Valley	9, 22

Fastener Placement

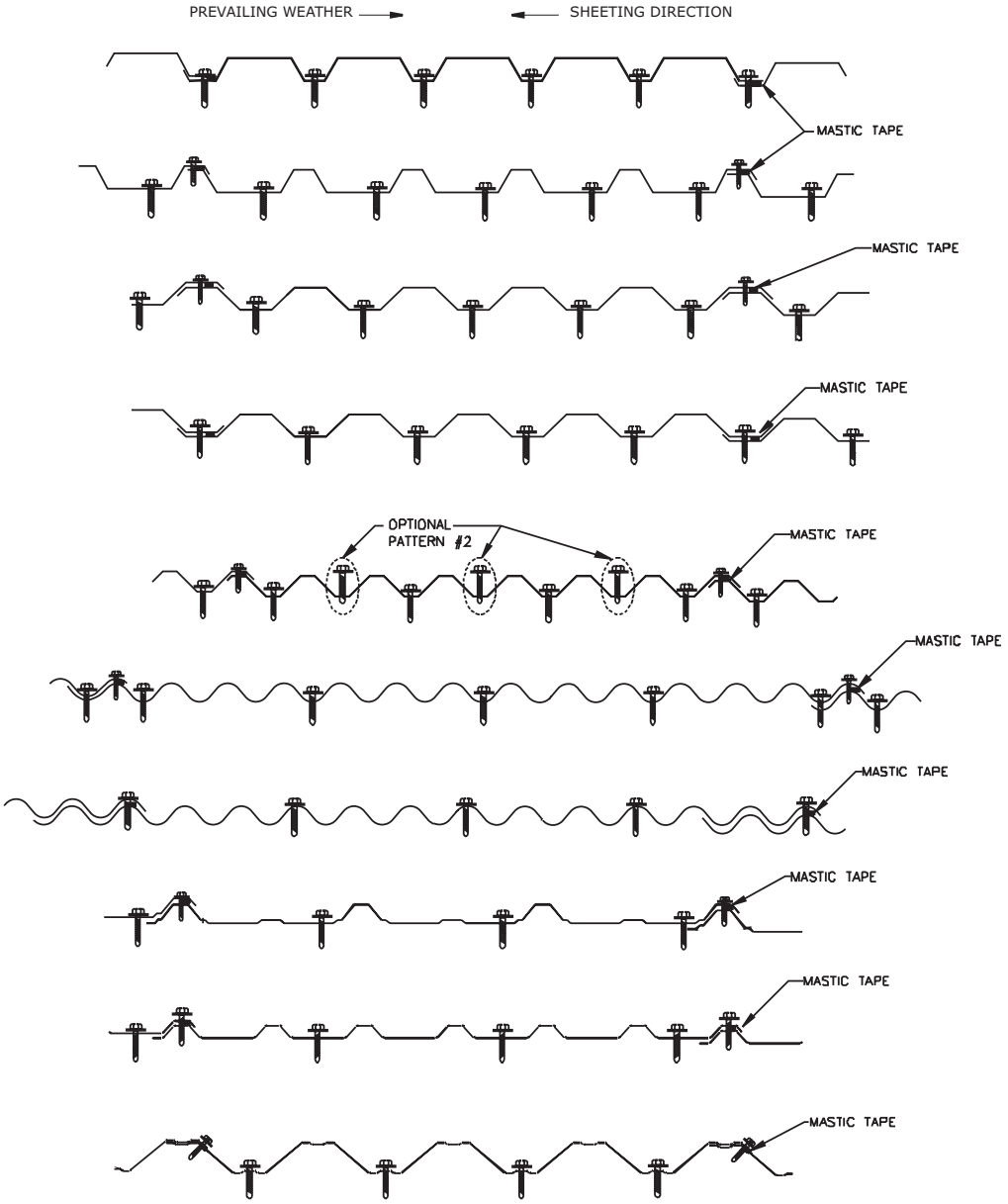

Box Rib
(36″ Coverage)
Wall application only

Reverse Box Rib
(36″ Coverage)
Roof or Wall application

HR-36®
(36″ Coverage)
Roof or Wall application

Reversed HR-36
Wall application only

Mini-V-Beam
(32″ Coverage)
Roof or Wall application

Nu-Wave® Corrugated
(34 2/3″coverage) Wall application

Nu-Wave Corrugated
(32″ Coverage) Roof Application

Super-Span®
(36″ Coverage)

U-Panel
(36″ Coverage)

X-Span®
(36″ Coverage)

Note: Lap panels away from prevailing weather. Use only those accessories specifically designed for use with this product. Use only galvanized or Zincalume®-coated fasteners. Isolate roofing and flashings from contact with dissimilar metals. Fastener selection will vary based upon substrate. The use of butyl mastic tape along the sidelaps, as shown above, is always recommended for roof panels. Space lap screws @ 18″ o.c. maximum.

Fastener Selection

Fastener #		Description	Use
1	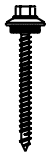	#9 x 1″, 1 1/2″, 2″, 2 1/2″, 3″ Wood Screw 1/4″ Hex Head	Panel to Dimensional Lumber
2		#14 x 1″, 2″ Wood Screw 5/16″ Hex Head	Panel to Plywood Minimum 1/2″ thick, structural grade
3		#12 x 3/4″ Stitch Screw 1/4″ Hex Head (compatible with #9 wood screw)	Trim and side lap attachments
4		#14 x 7/8″ Lap Self Driller 5/16″ Hex Head (compatible with #14 wood screw)	Trim and side lap attachments. Attach panels to 18, 20, 22 gauge supports.
5		STST–42 Stainless Steel Rivet 1/8 x 1/8 *Requires sealant over rivet head.	Trim-to-trim or trim-to-wall panel attachments
6		#12 x 1″, 1 1/2″, 2″, 1 1/2″ Self Driller 5/16″ Hex Head	Panel to purlin attachments

Notes:

- The table above shows the metal buildings panel fasteners provided by AEP Span. Refer to the panel flashing details and fastener placement pages of this manual for specific usage.
- Panel attachment screws must be long enough to fully penetrate through the roof decking, or penetrate solid lumber at least one inch.
- All screws must be coated to provide protection against corrosion.
- Exposed fasteners should have sealing washers and be the same color as the parts they attach.
- Roofing nails will also be required, but not furnished by AEP Span. They are typically used to temporarily hold a flashing in place that needs to be installed prior to panels.
- Screws must be properly driven to ensure proper seal and holding strength. Do not underdrive or overdrive the screws. Recommended drill speed is 2000 rpm. Use of a depth-sensing nosepiece will aid in properly driving screws.

Proper Installation of Gasketed Fasteners

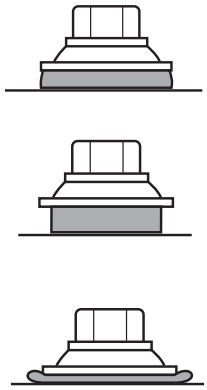

Ridge/Hip Flashing

Box Rib, HR-36, and Super-Span

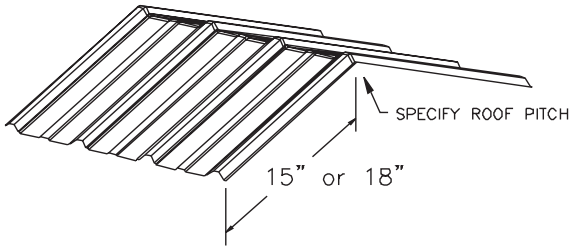

Formed Ridge (R6)
Super-Span

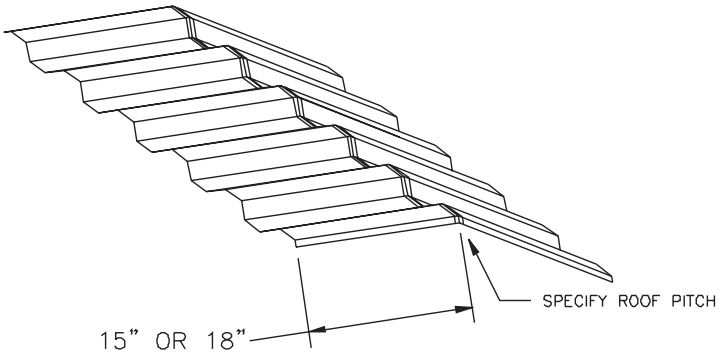

Formed Ridge (R11)
HR-36 and Box Rib

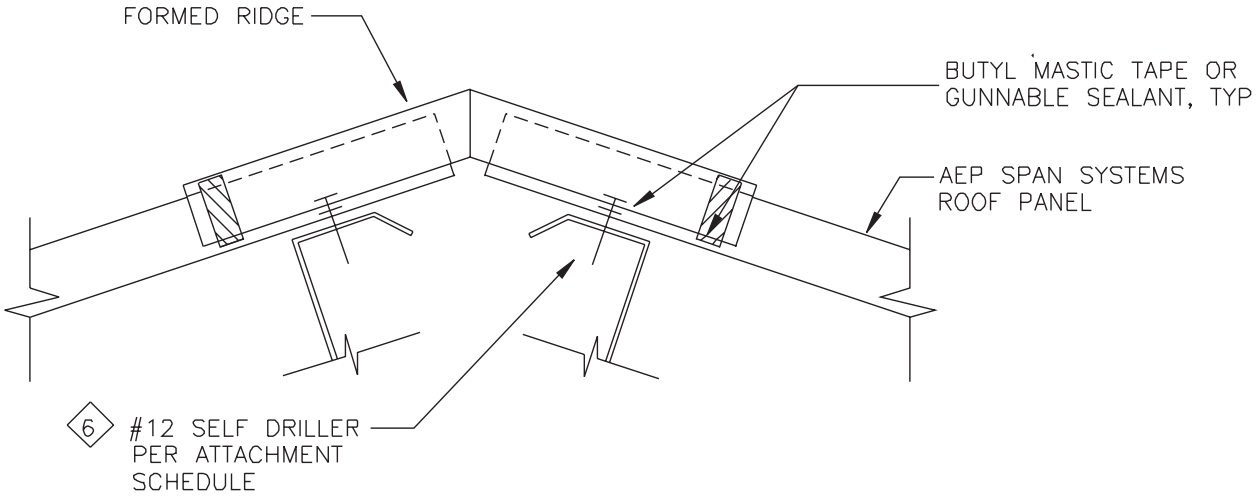

Note:
Maximum pitch with formed ridge 3:12.

Valley Flashing

Box Rib, HR-36, Mini-V-Beam and Super-Span

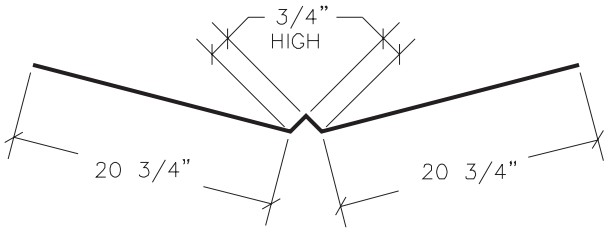

W-Valley (V6)

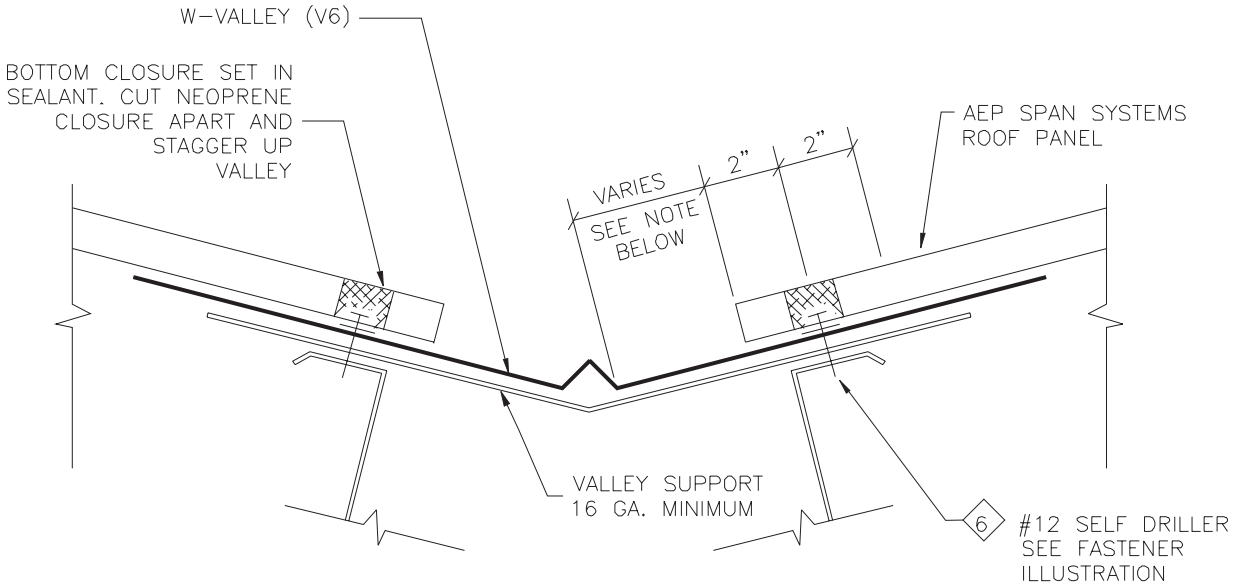

Note:

- Valley dimensions must be the proper width to account for slope, snow, ice and heavy rain conditions. An underlayment such as a rubberized cold-applied membrane is recommended extending a minimum of 3′-0″ up from the center of the valley on each side.

- Special ordered beveled closures available for a specific pitch/slope.

Eave Flashing

Box Rib, HR-36, Mini-V-Beam and Super-Span

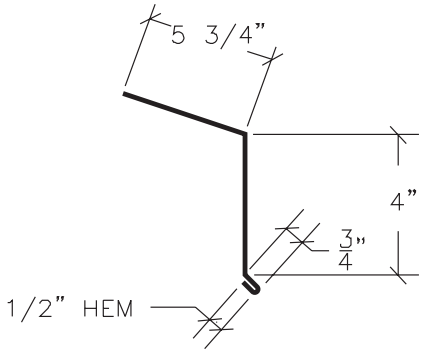

Eave (E6)

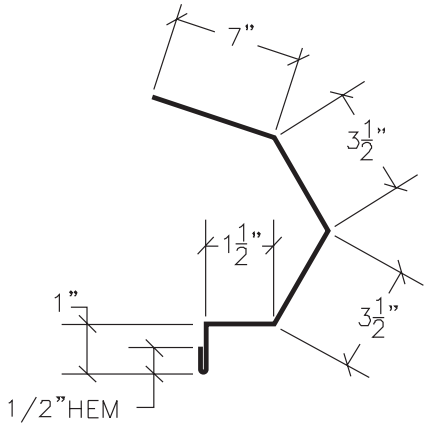

Sculptured Eave (E7)
optional

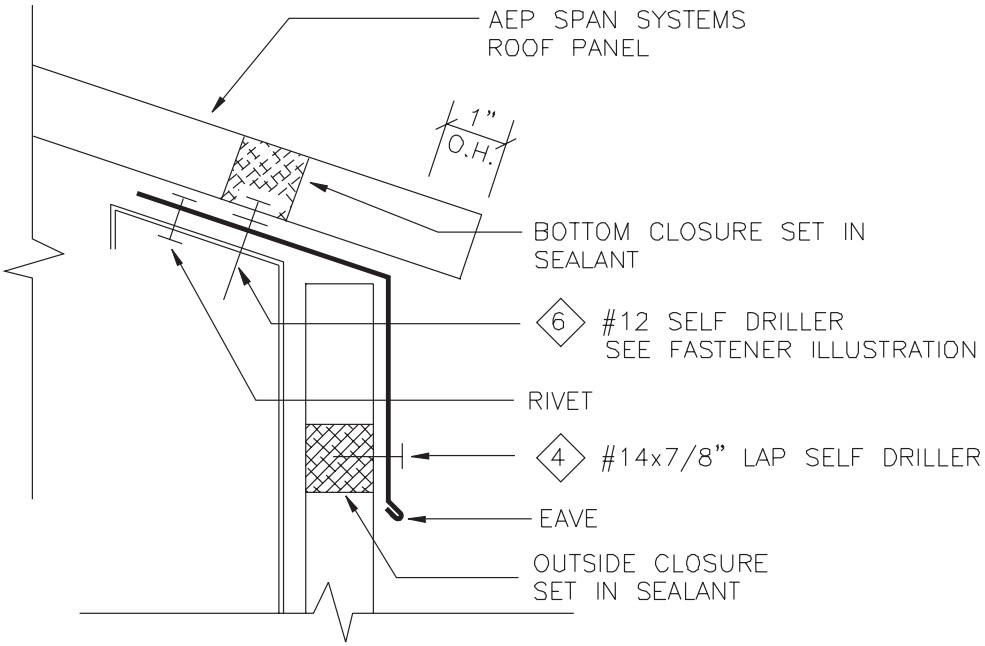

Gutter Flashings

Box Rib, HR-36, Mini-V-Beam and Super-Span

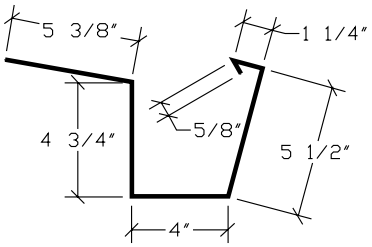

Box Gutter (GU6)
pre-hung

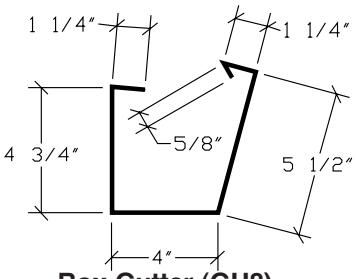

Box Gutter (GU8)
post-hung

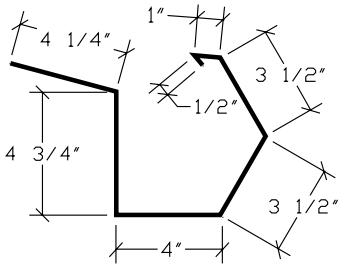

Sculptured Gutter (GU7)
pre-hung

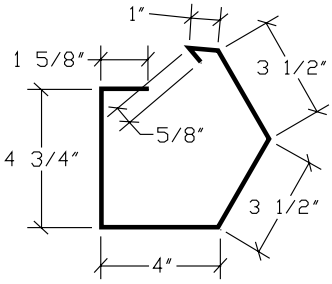

Sculptured Gutter (GU9)
post-hung

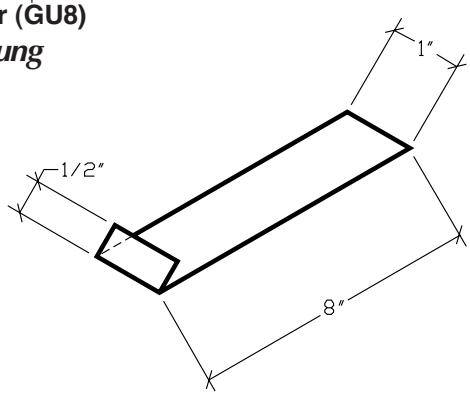

Gutter Strap (GS6)

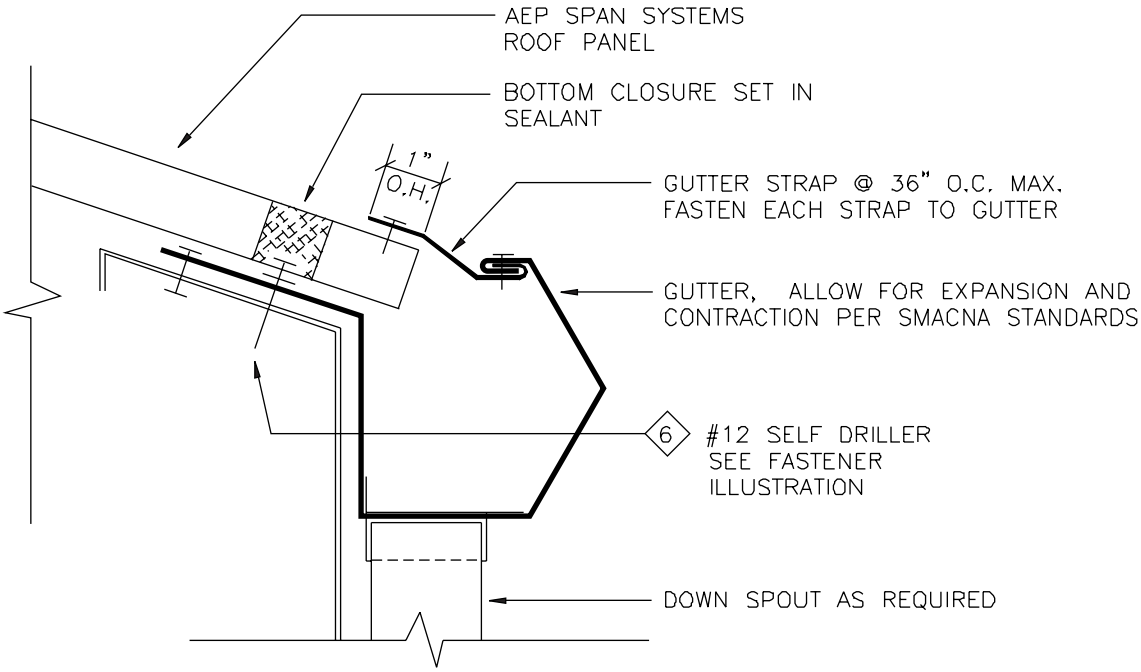

Gable Flashings

Box Rib, HR-36, Mini-V-Beam and Super-Span

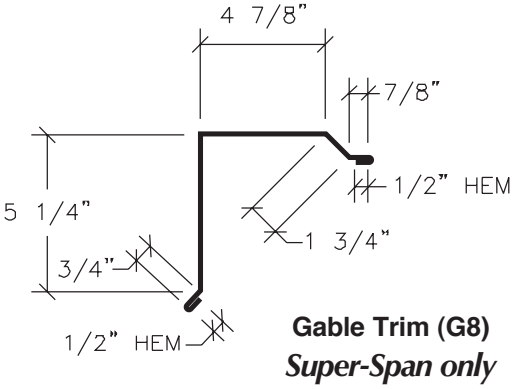

Gable Trim (G8)
Super-Span only

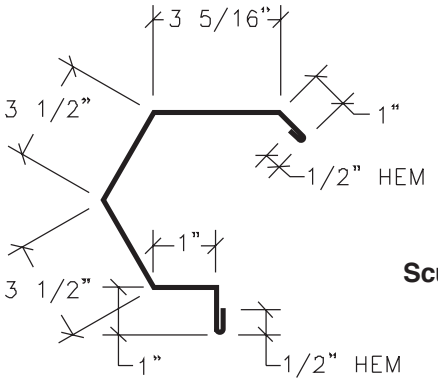

Sculptured Gable Trim (G15)

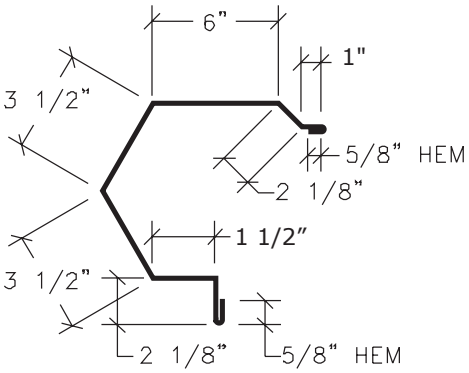

Sculptured Gable Trim (G9)
HR-36 only

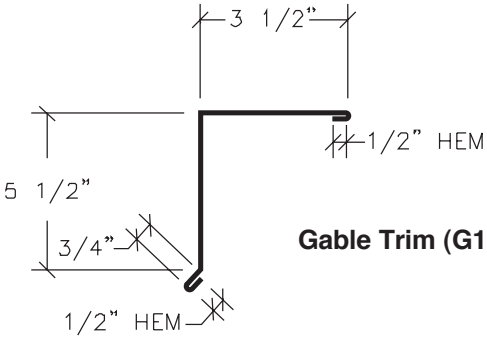

Gable Trim (G12)

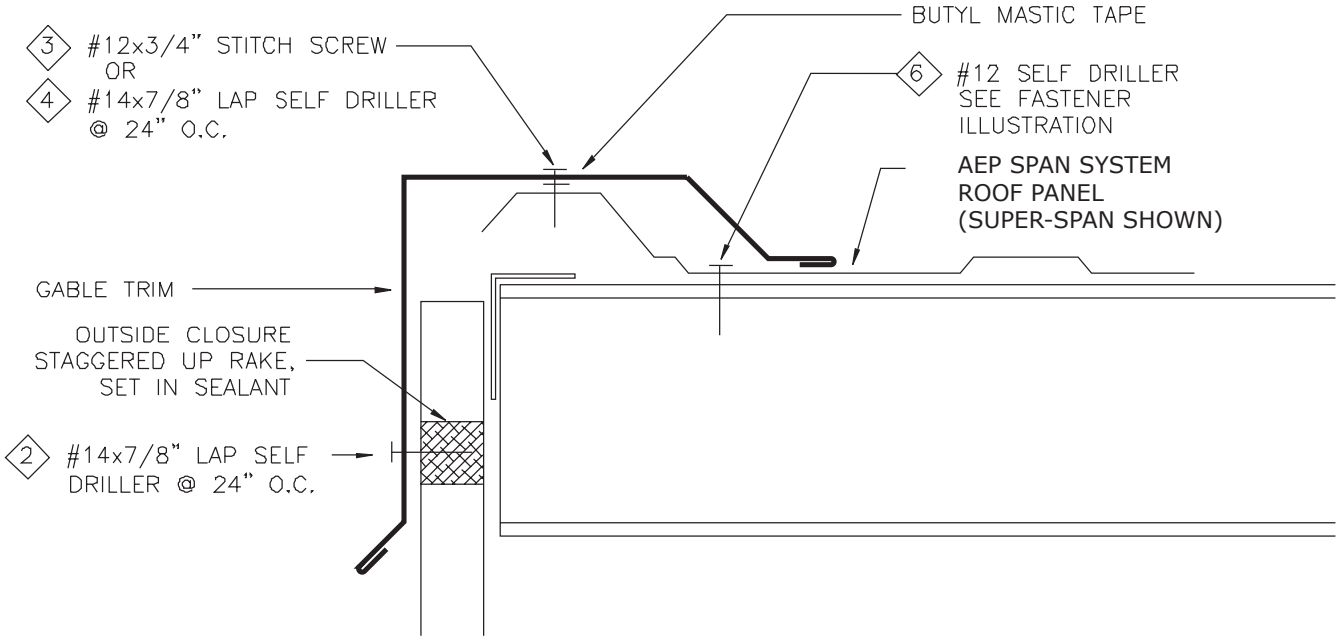

Peak Flashings

Box Rib, HR-36, Mini-V-Beam and Super-Span

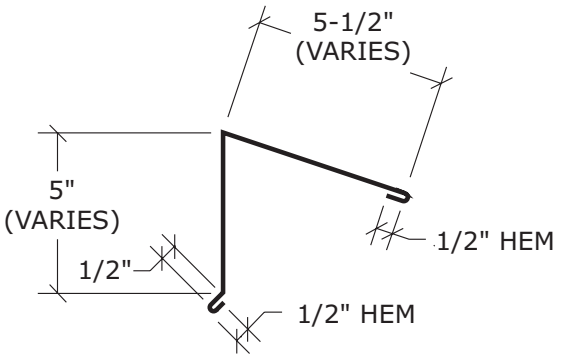

Peak (PF16)

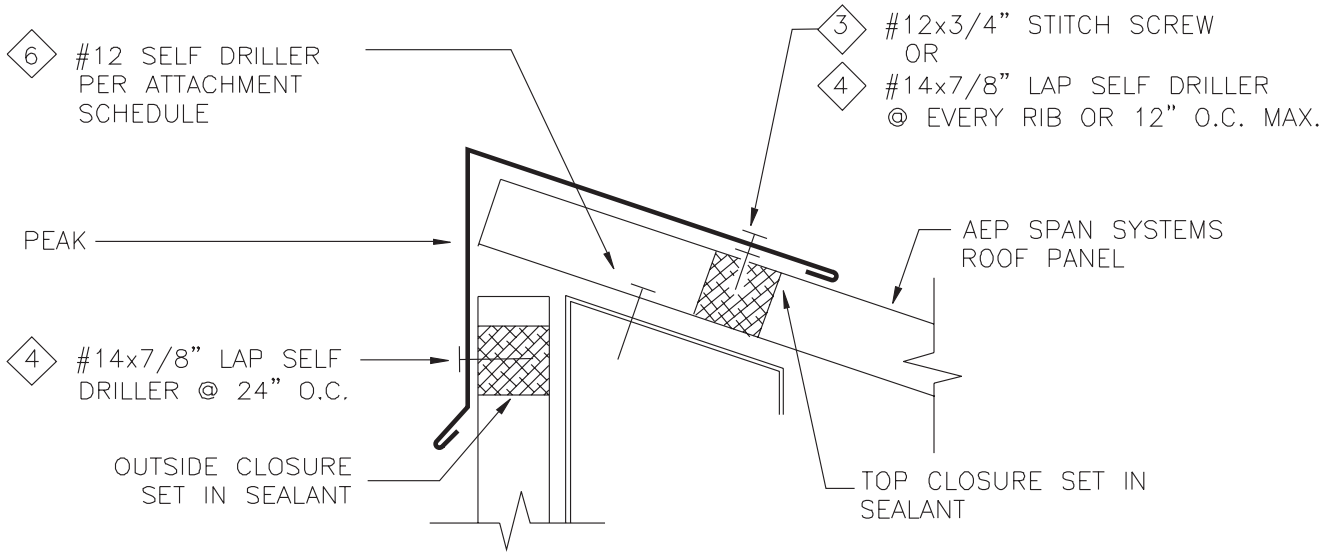

Sidewall Flashings

Box Rib, HR-36, Mini-V-Beam and Super-Span

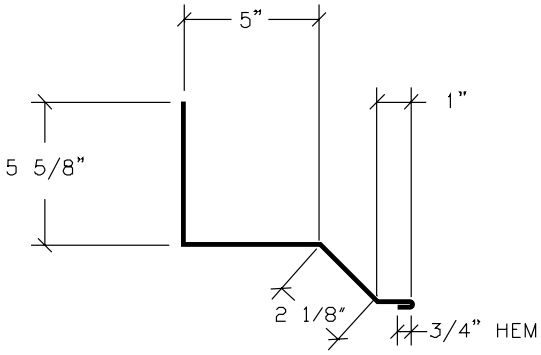

Sidewall (SW7)
Super-Span only

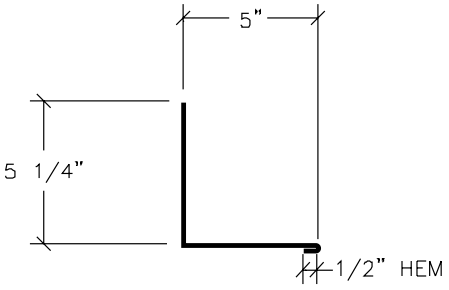

Sidewall (SW8)

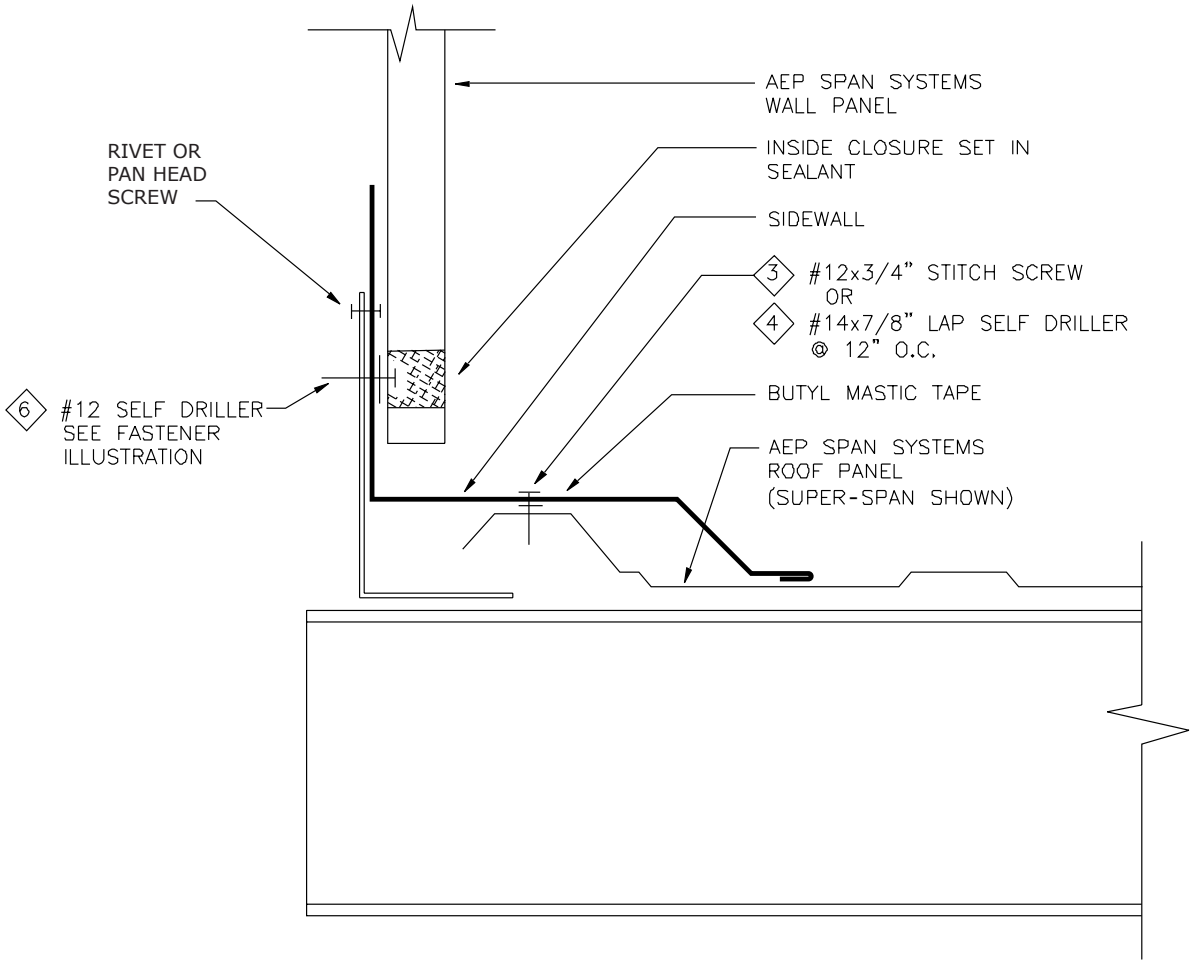

Endwall Flashing

Box Rib, HR-36, Mini-V-Beam and Super-Span

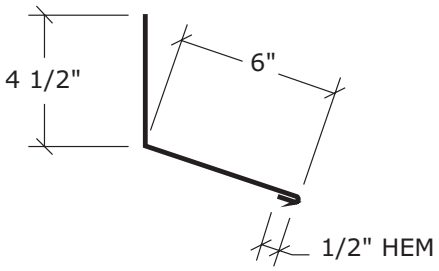

Endwall (EW6)

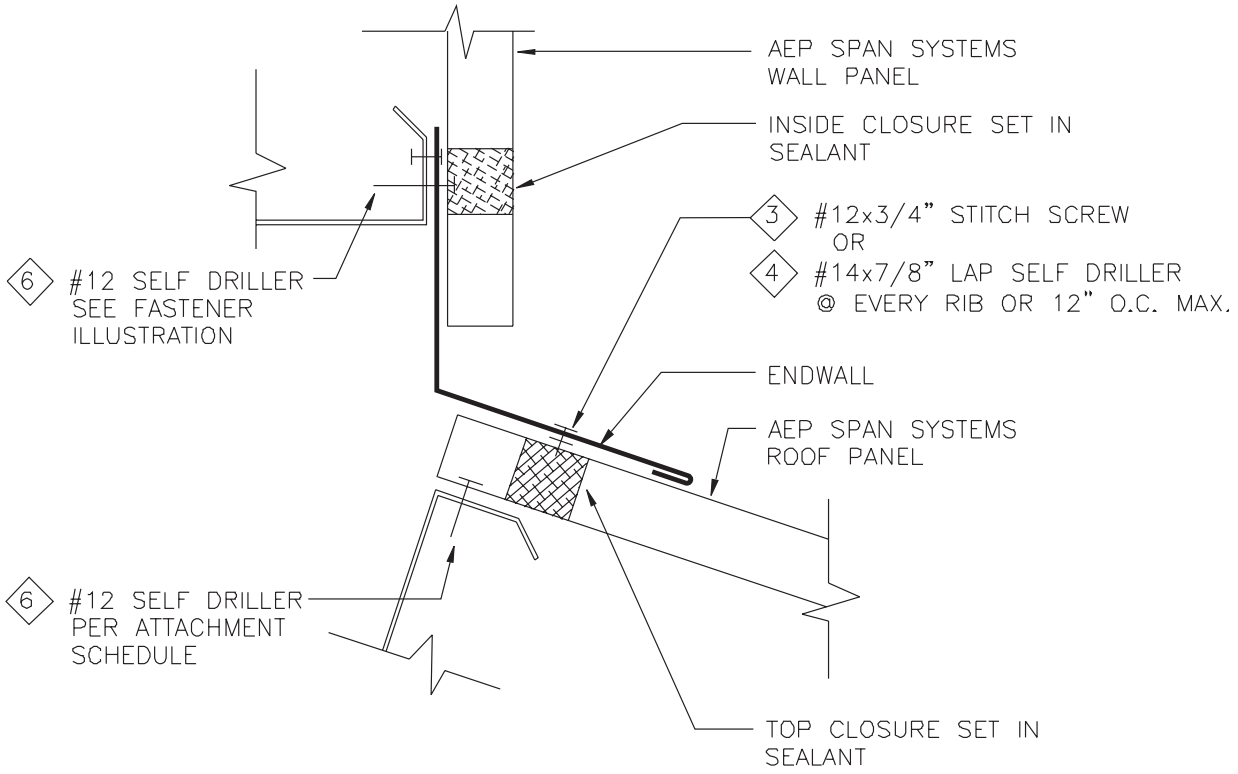

Panel Endlap

Box Rib, HR-36, Mini-V-Beam and Super-Span

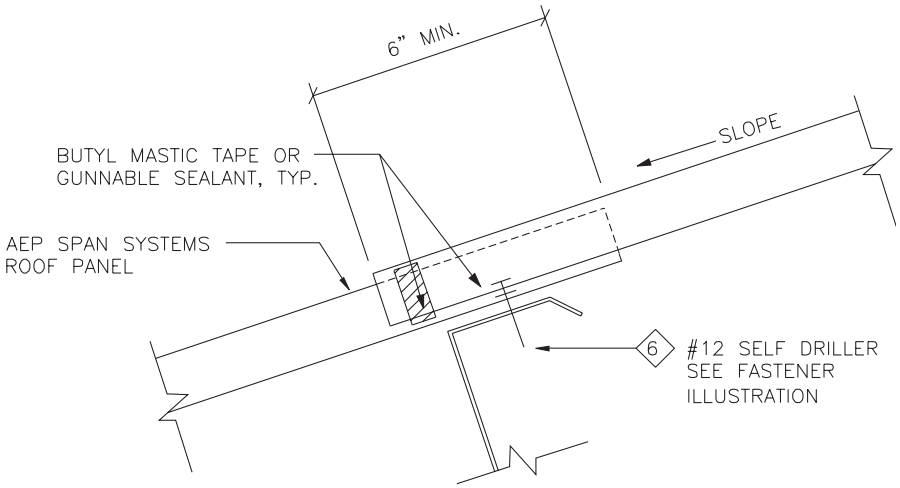

Wall Details
Window/Door Trim

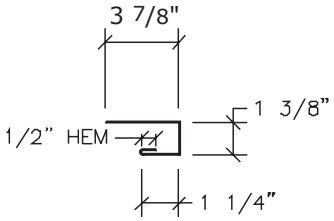

C-Metal (C-6)
Super-Span only

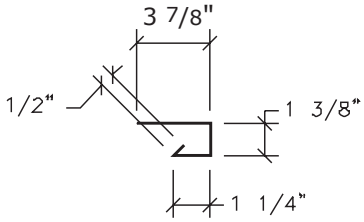

Jamb Trim (J6)
Super-Span only

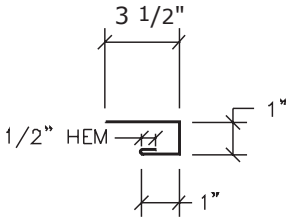

C-Metal (C-13)
Nu-Wave & U-Panel

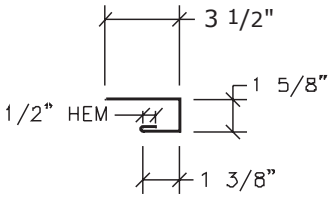

C-Metal (C11)
Box Rib & HR-36

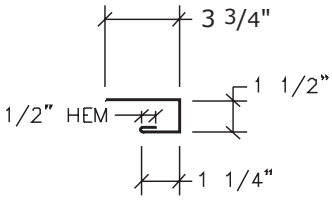

C-Metal (C12)
Mini -V-Beam

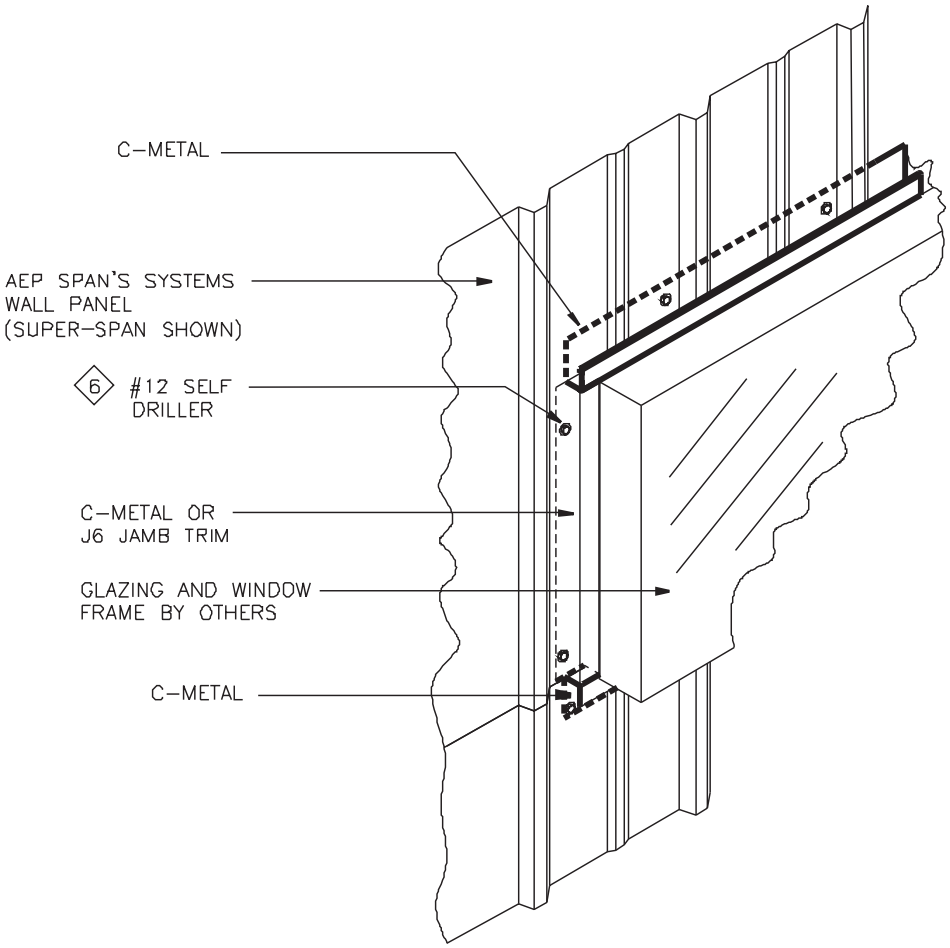

Wall Details • Drip Edge, Wall Step, Panel Top

Box Rib, HR-36, Mini-V-Beam and Super-Span

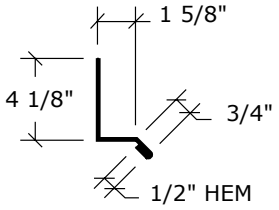

Drip Edge (B6)

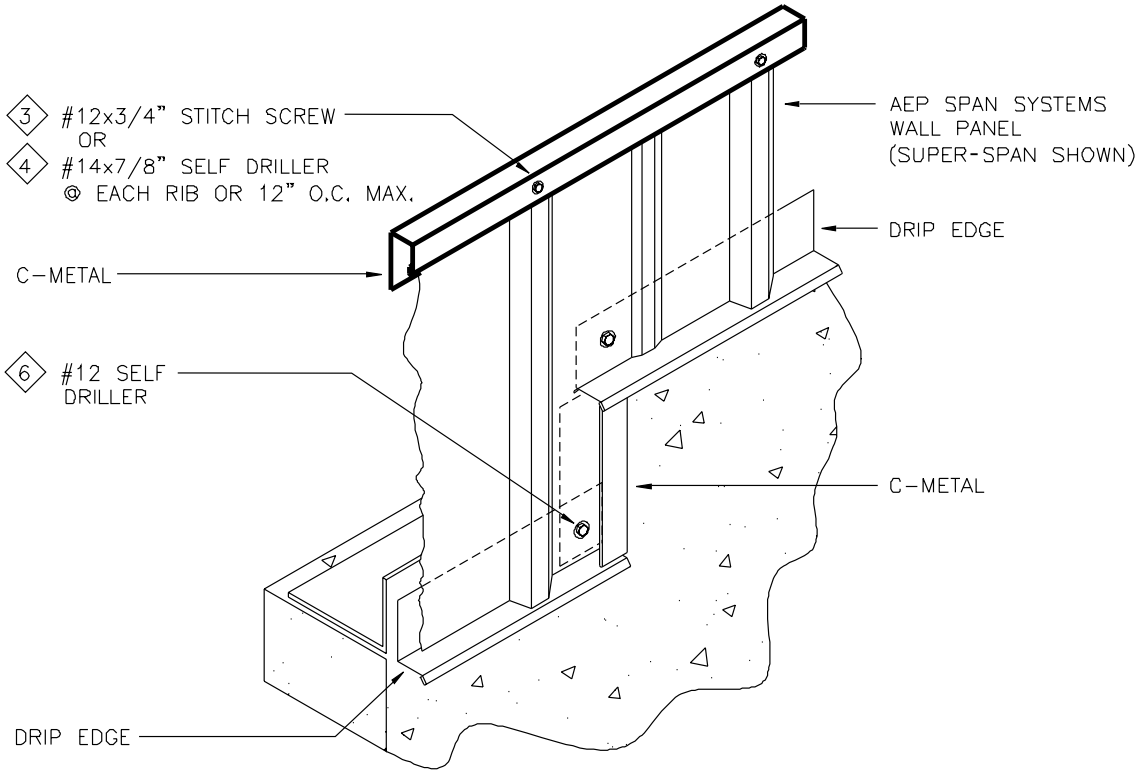

Wall Details • Inside Corner

Box Rib, HR-36, Mini-V-Beam and Super-Span

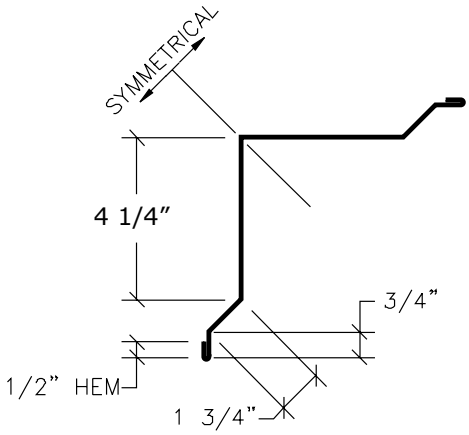

Inside Corner (IC7)

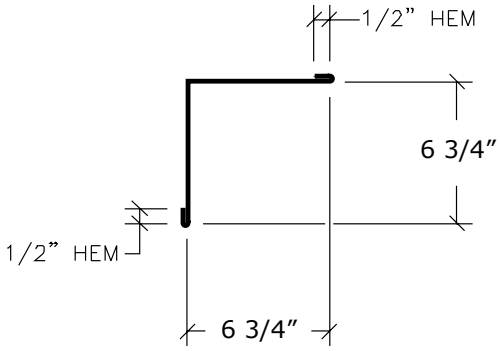

Inside Corner (IC 11)

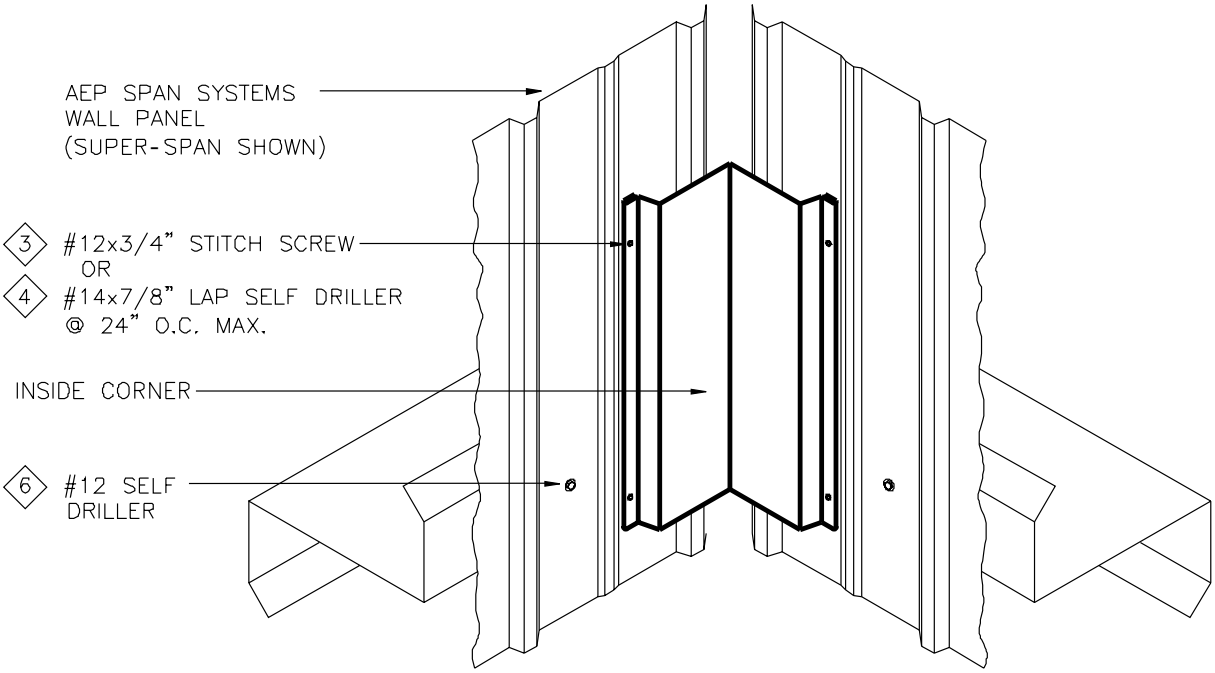

Wall Details • Outside Corner

Box Rib, HR-36, Mini-V-Beam and Super-Span

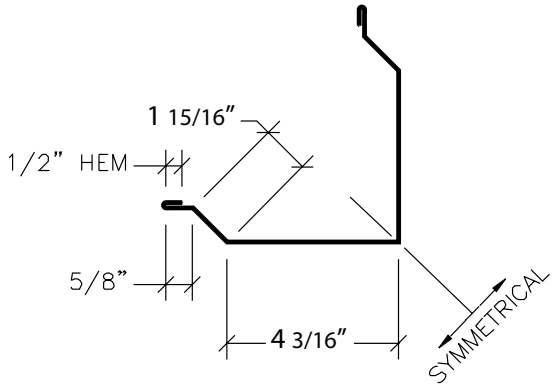

Outside Corner (OC7)
Super-Span only

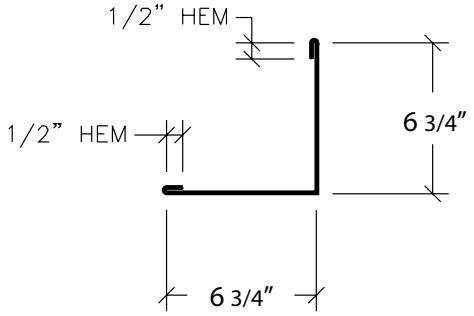

Outside Corner (OC11)

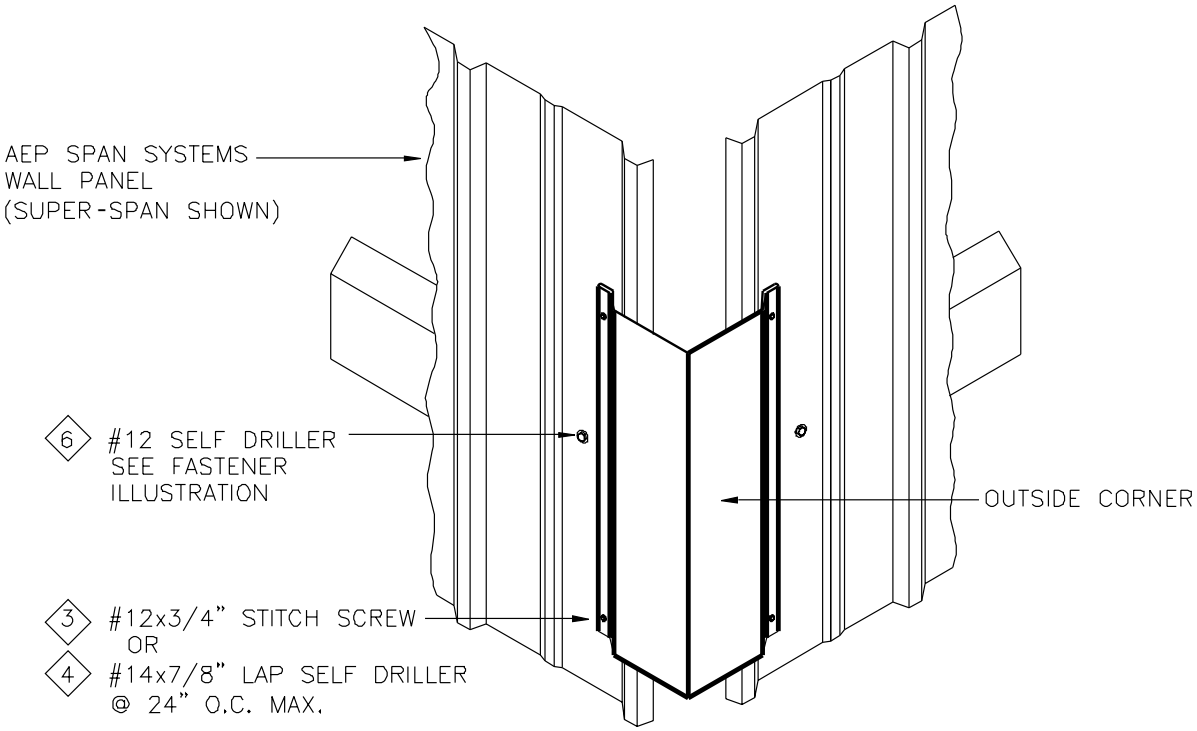

Ridge/Hip Flashing

NuWave Corrugated & U-Panel

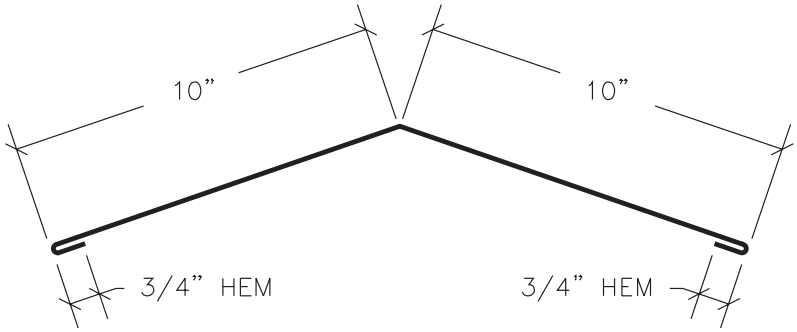

Ridge/Hip (R8)

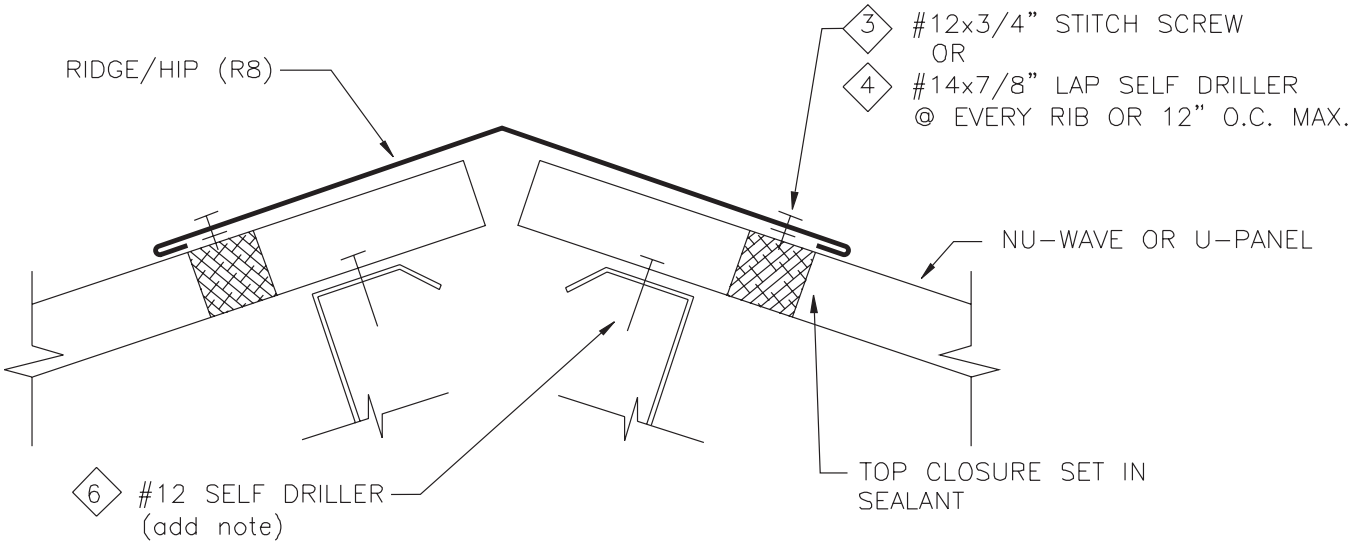

Note:

- Fasteners (except under ridge cap) should be located on tops of corrugations.

- Special ordered beveled closures available for a specific pitch/slope.

Valley Flashing

NuWave Corrugated & U-Panel

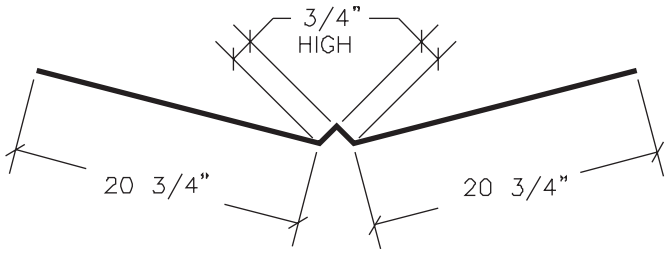

W-Valley (V6)

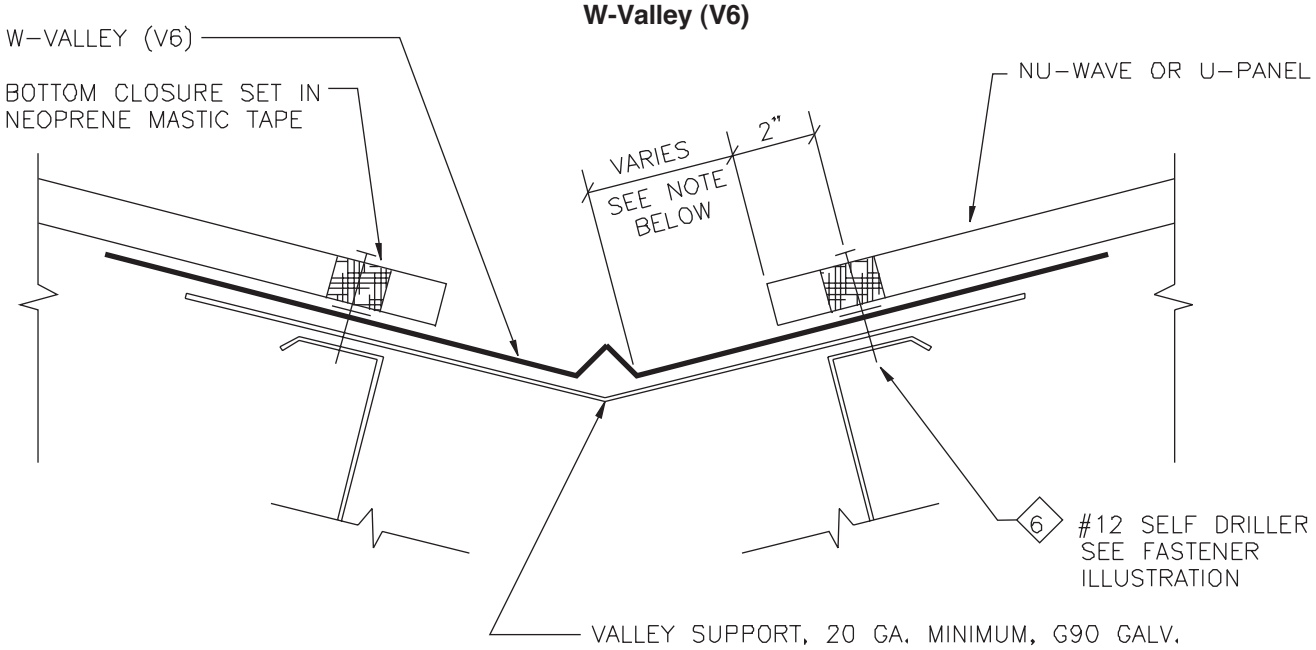

Note:

- Valley dimensions must be the proper width to account for slope, snow, ice and heavy rain conditions. An underlayment such as a rubberized cold-applied membrane is recommended extending a minimum of 3′-0″ up from the center of the valley on each side.

- Special ordered beveled closures available for a specific ptich/slope.

Eave Flashing

NuWave Corrugated & U-Panel

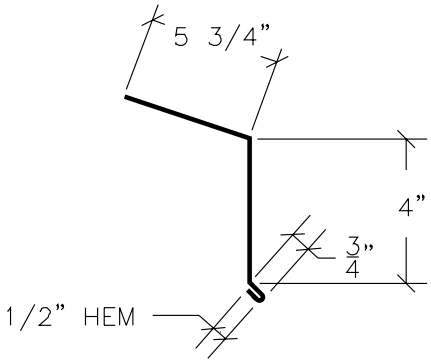

Eave (E6)

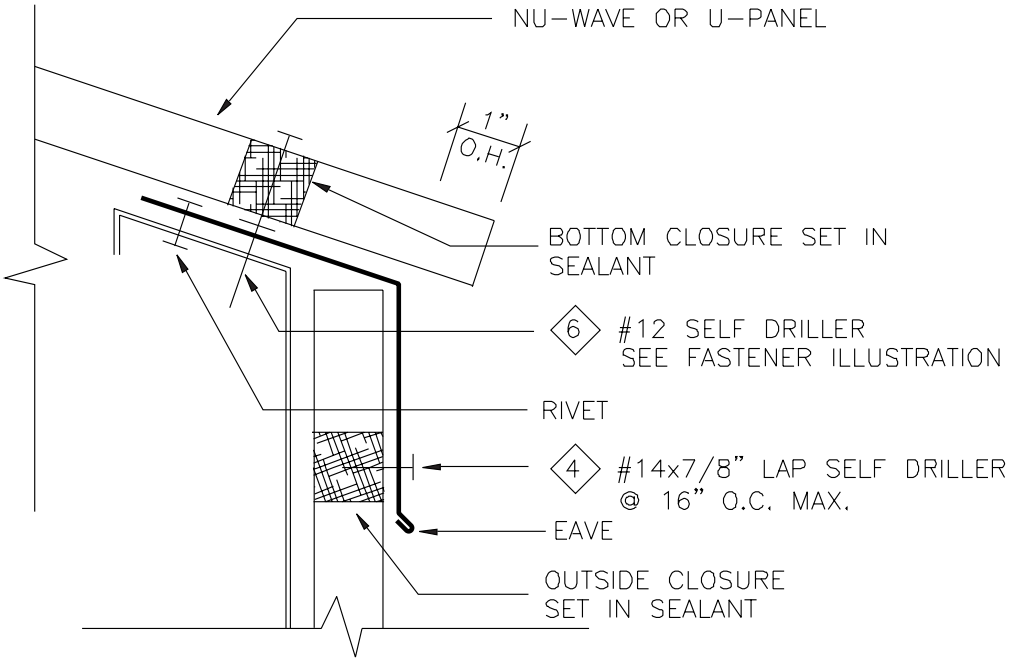

Gutter Flashing

NuWave Corrugated & U-Panel

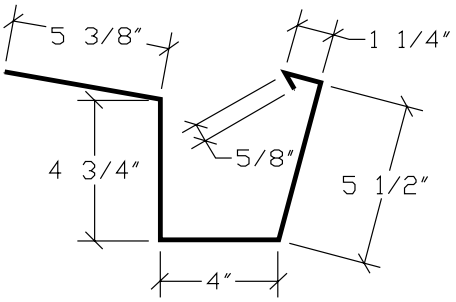

Box Gutter (GU6)
pre-hung

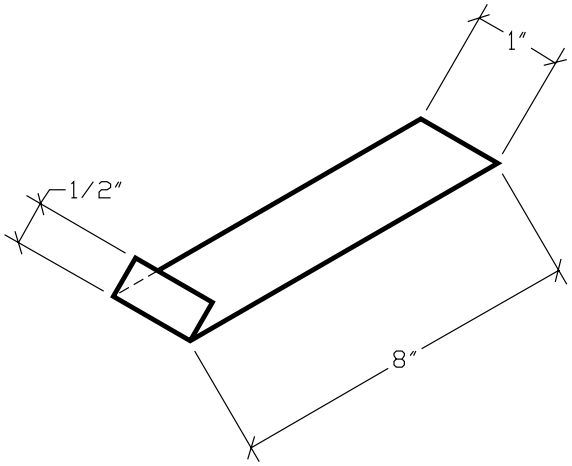

Gutter Strap (GS6)

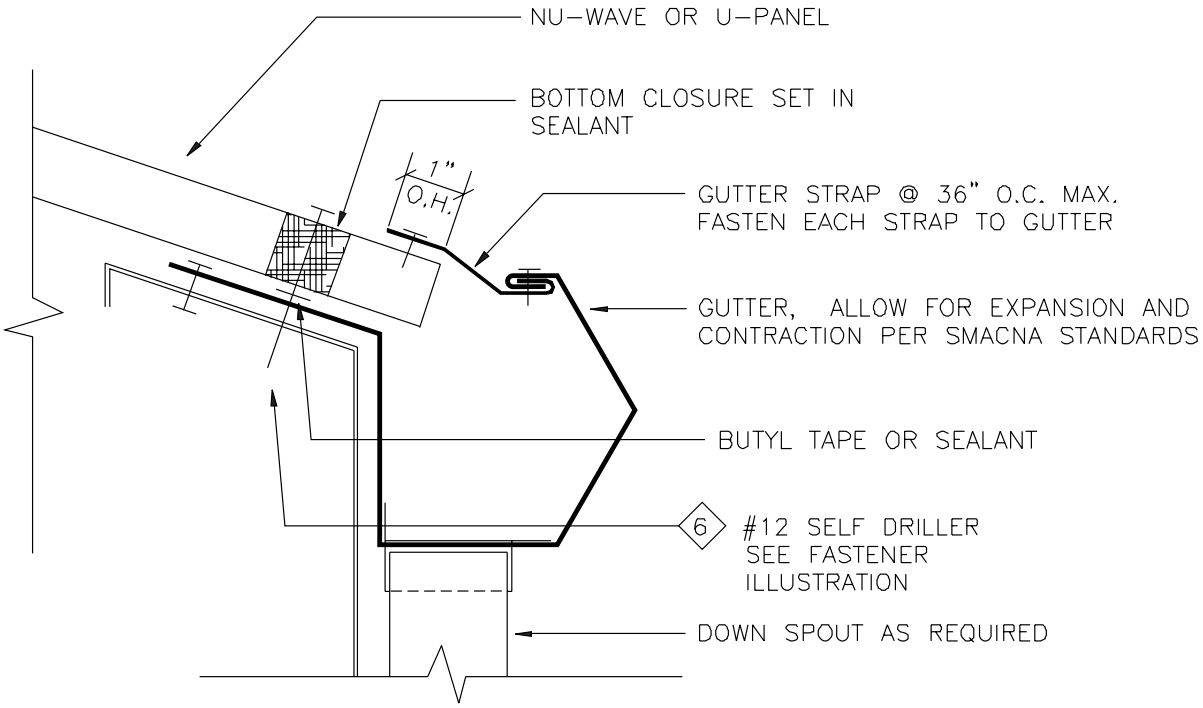

Gable Flashing

NuWave Corrugated & U-Panel

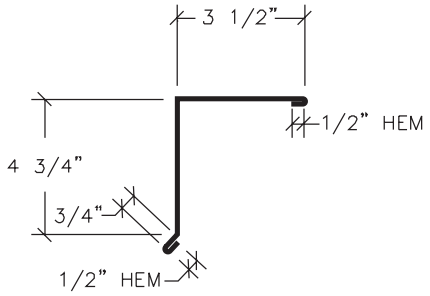

Gable Trim (G19)

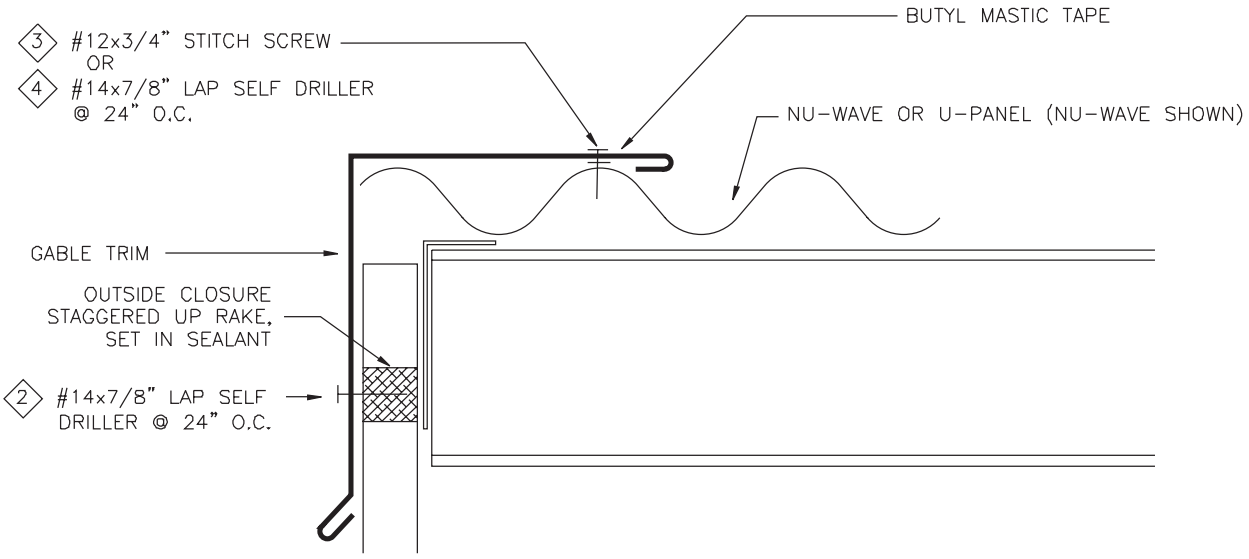

Peak Flashing

NuWave Corrugated & U-Panel

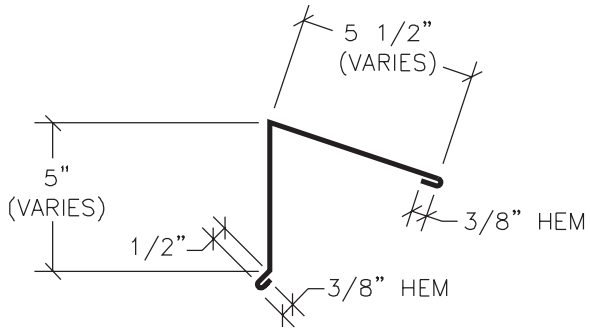

Peak (PF16)

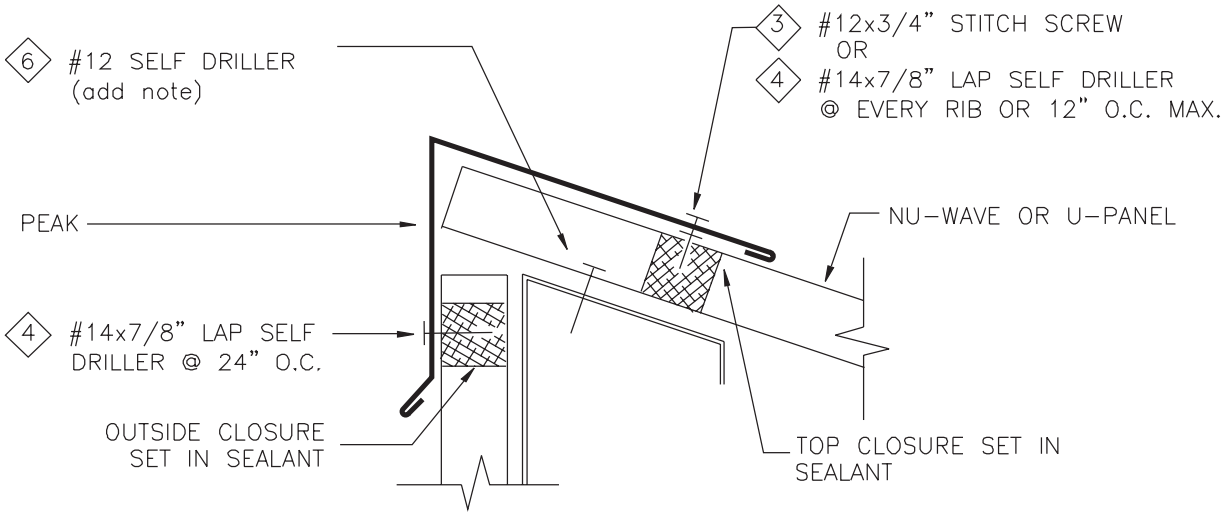

Sidewall Flashing

NuWave Corrugated & U-Panel

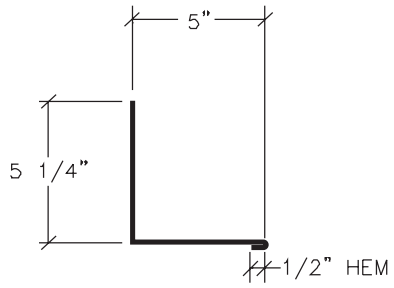

Sidewall (SW8)

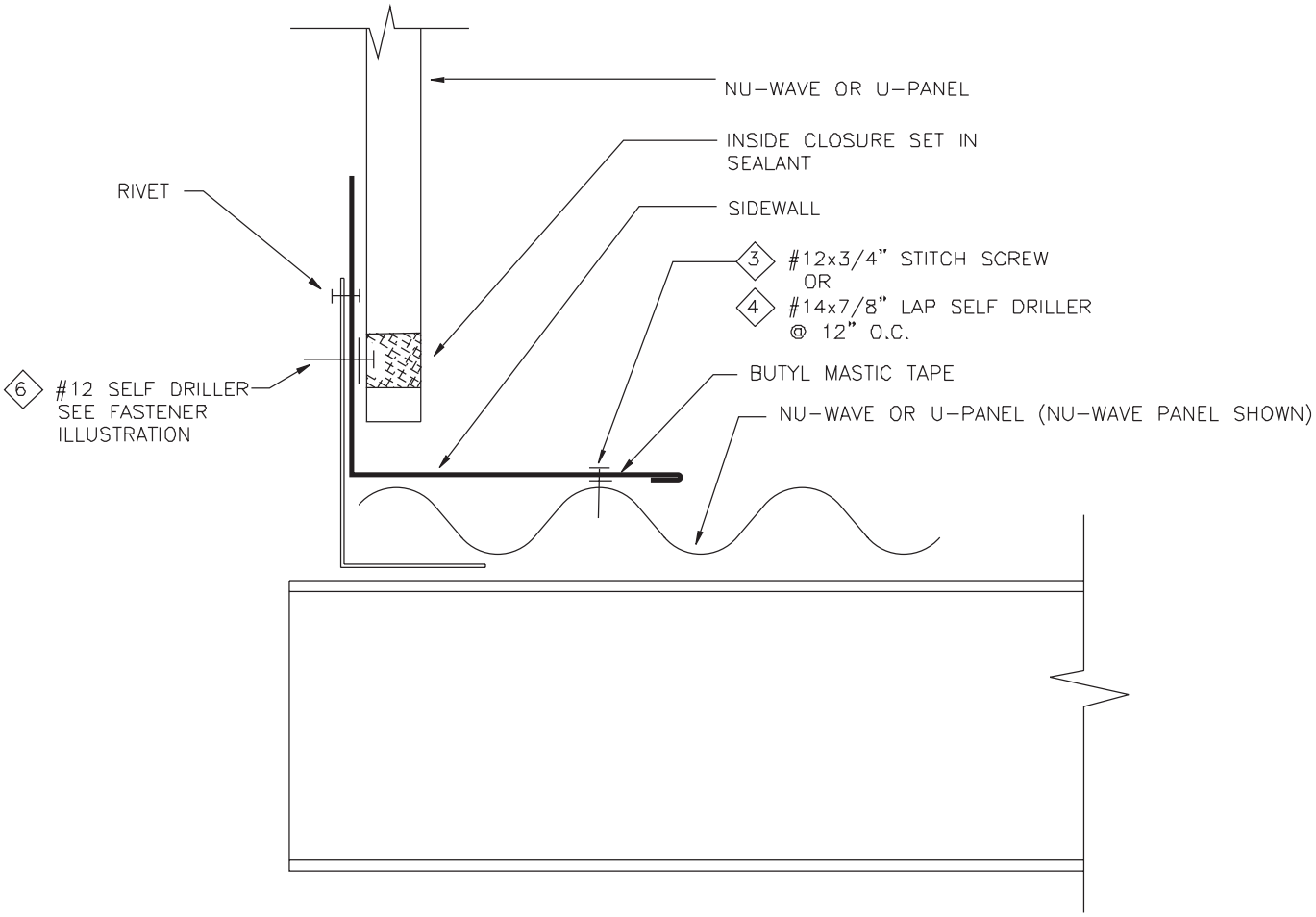

Endwall Flashing

NuWave Corrugated & U-Panel

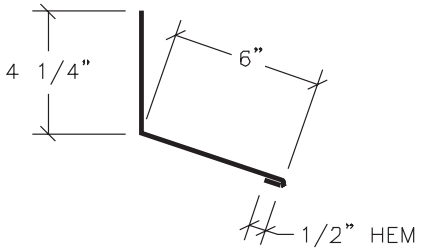

Endwall (EW6)

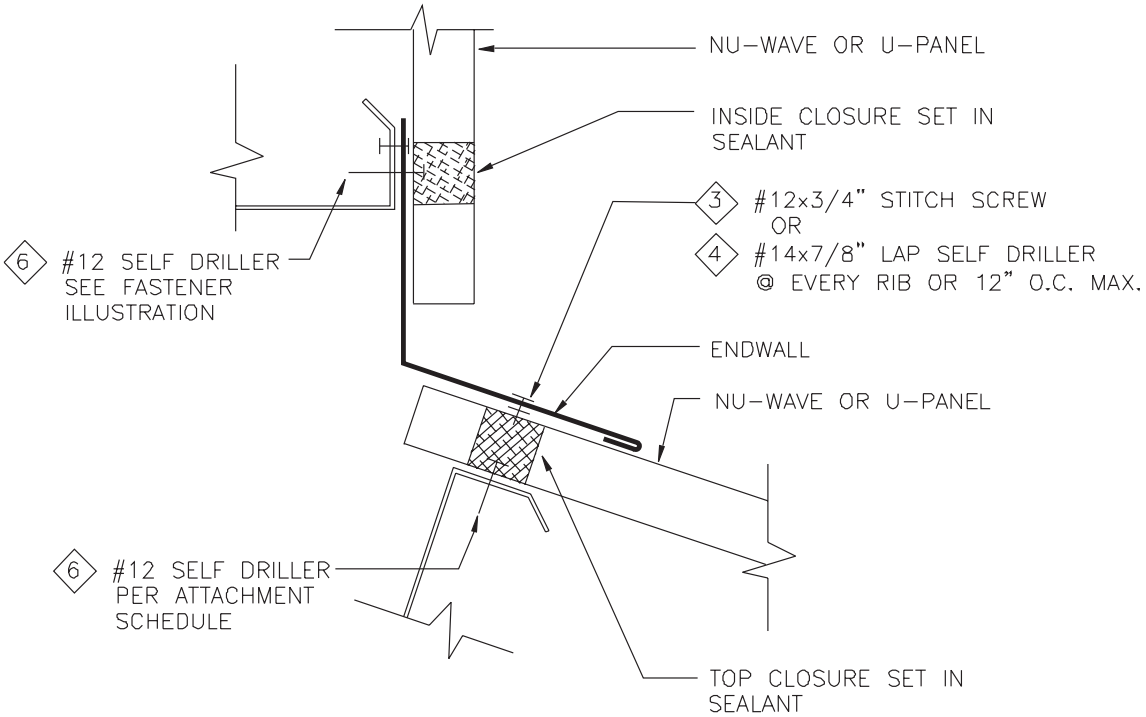

Wall Details • Base Trim

NuWave Corrugated & U-Panel

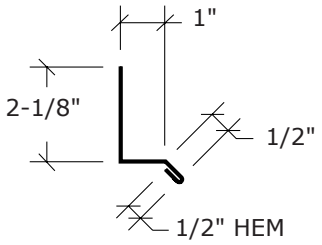

Base Trim (B1)

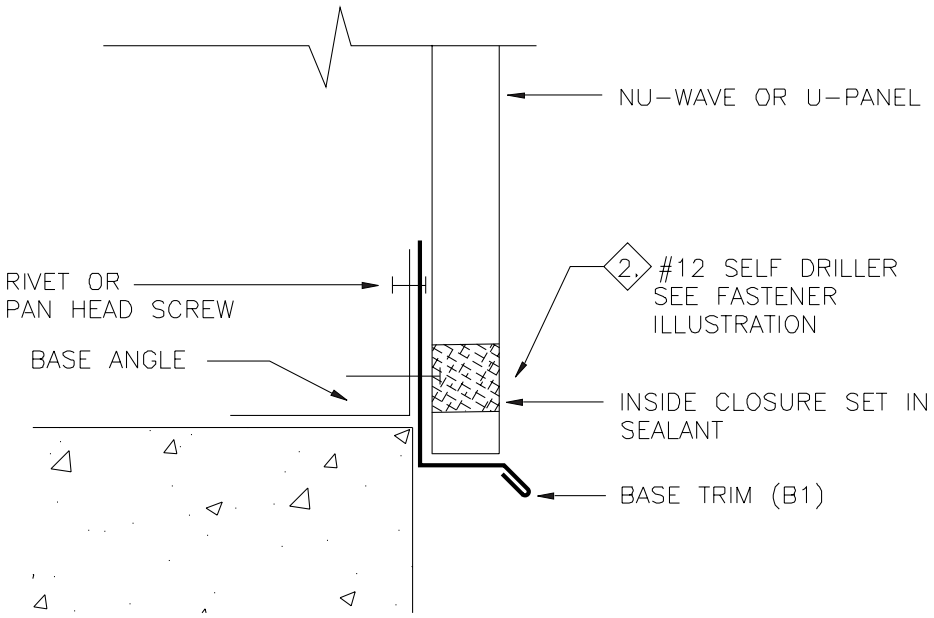

Wall Details •"C" Trim

NuWave Corrugated & U-Panel

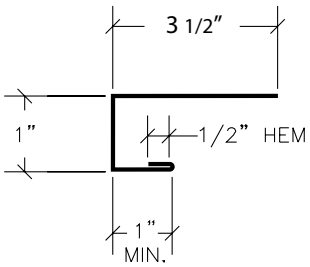

"C" Trim (C13)

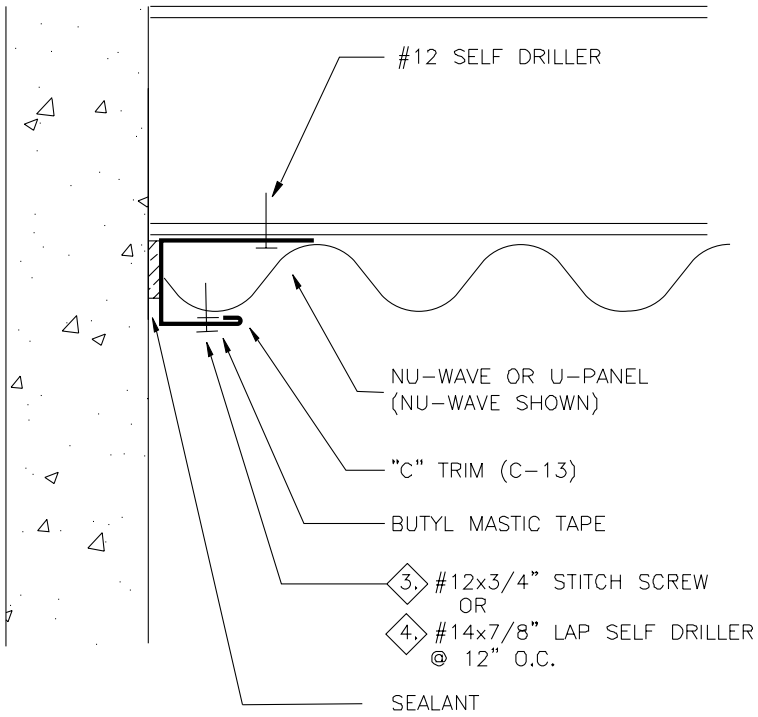

Wall Details • Inside Corner

NuWave Corrugated & U-Panel

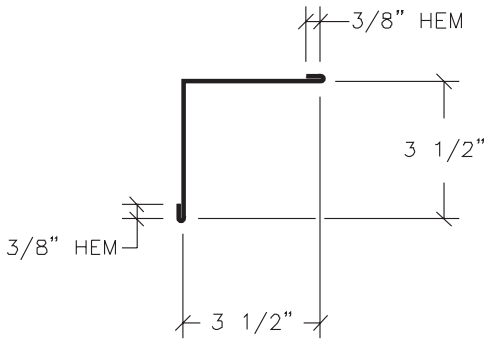

Inside Corner (IC2)

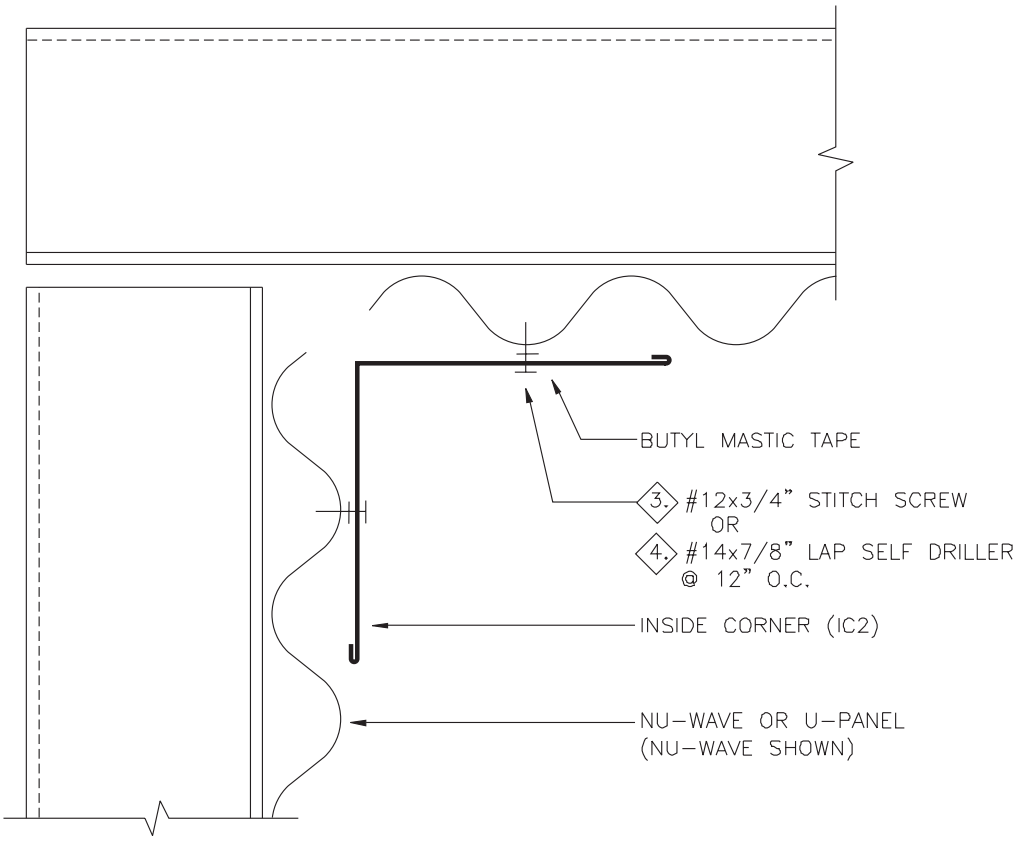

Wall Details • Outside Corner

NuWave Corrugated & U-Panel

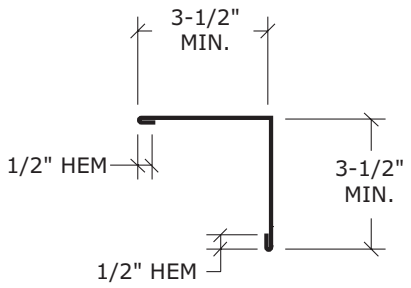

Outside Corner (OC2)

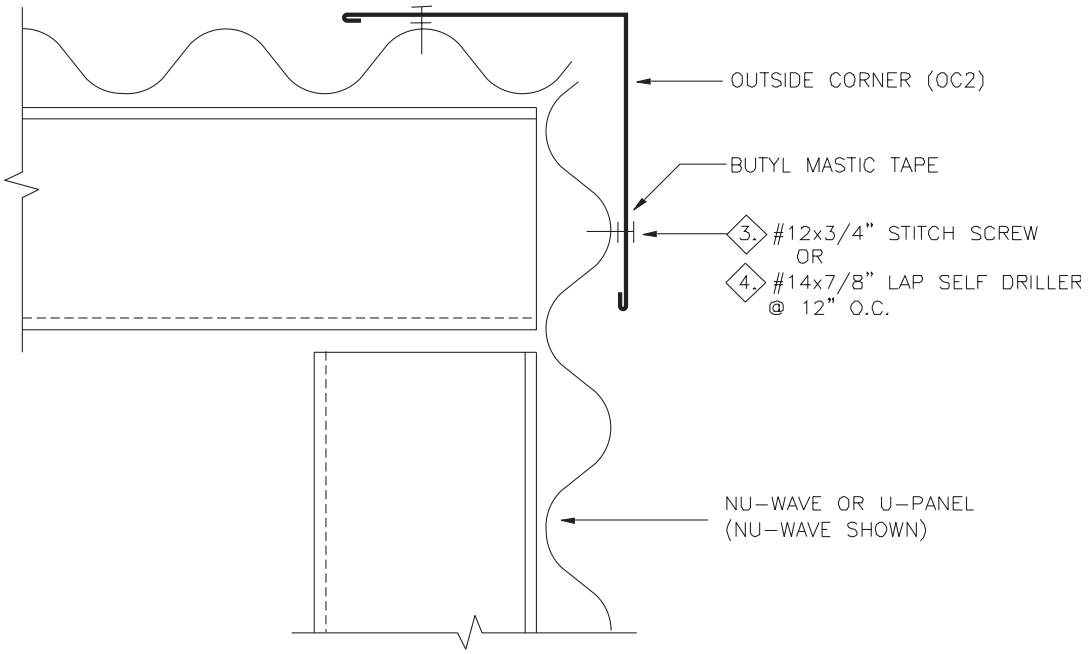

METAL BUILDING INSULATION

A DIVISION OF BUILDING OUTLET CORP.

Retro-Fit Worksheet 1-800-486-8415

Fill in worksheet and fax to (303) 948-2059

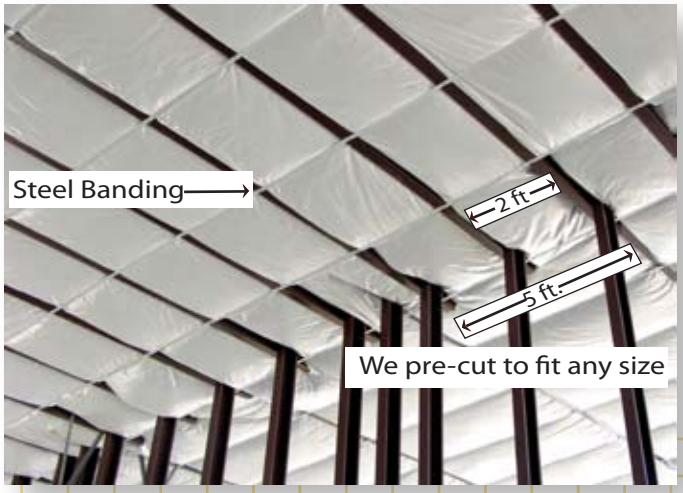

Please Draw Space Between Purlins & Door Deductions

End Wall 1 Roof Pitch 4:12 **End Wall 2**

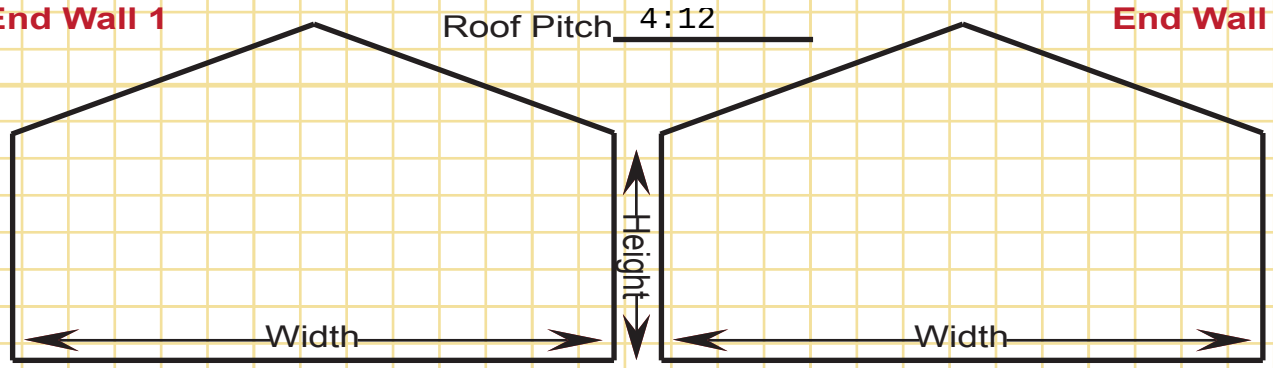

Width 50' Height 16' Width _____ Height _____

Side Wall 1 **Side Wall 2**

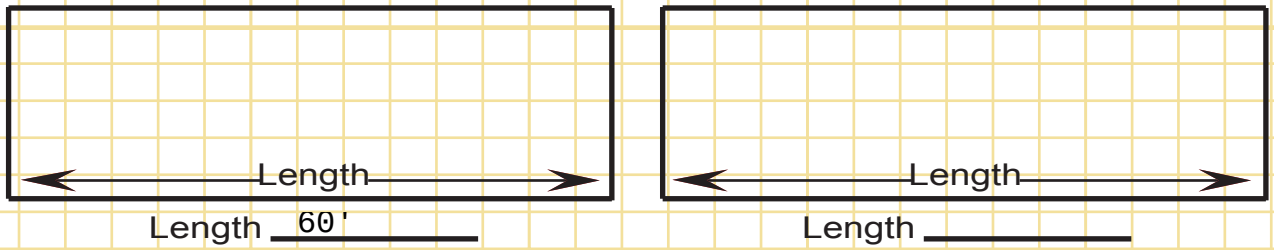

Length 60' Length _____

Vinyl Facing Type	Wall	Roof
WMP-VR (standard)	☐	☒
WMP-VR R	☐	☐
WMP VR-10	☐	☐
WMP VR-50 (Heavy)	☐	☐
Gym Guard	☐	☐
(2) 3" tabs non-taped	☐	☐
(2) 3" tabs taped	☐	☐
Black Facing	☐	☐

Insulation Thickness		Wall	Roof
2.75"	R-7	☐	☐
3"	R-10	☐	☐
3.5"	R-11	☐	☐
4"	R-13	☐	☐
6"	R-19	☐	☒
8"	R-25	☐	☐
9.5"	R-30	☐	☐
With Banding		☐	
Insulation Pins w/ Washer		☐	
Pin Glue		☐	
InsulHold		☐	

METAL BUILDING INSULATION

A DIVISION OF BUILDING OUTLET CORP.

Retro-Fit Worksheet 1-800-486-8415

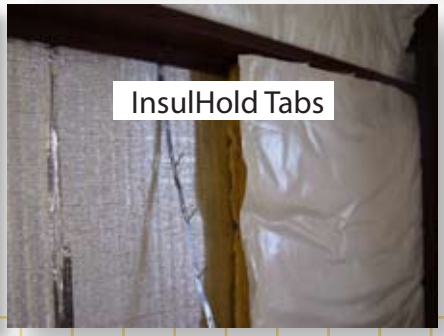

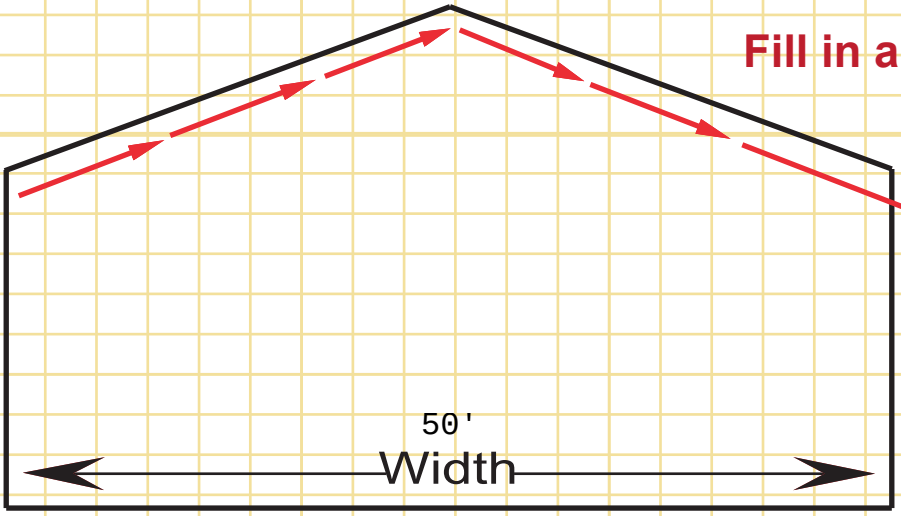

Fill in and fax to (303) 948-2059

Roof Slope Options

# of purlin spaces 20 (Verify)

Distance between purlins 30-3/4"

Length of building 60'

Additional Notes:

Name _____

Phone _____

Zip Code _____

Insulation Rep _____

Ways to Prevent Condensation in Metal Buildings

What is Condensation?

Condensation is a process in which water vapor changes to liquid. The higher the relative humidity the greater the water vapor content. Maintaining a reasonable inside relative humidity of less than 60% is an important factor in **preventing condensation**. Relative humidity is a percentage measurement of the amount of water vapor present in the air in relation to the amount it is capable of holding at that temperature. Warm air holds much more moisture than cold air, thus condensation is created from warm air. The indoor relative humidity can be lowered by bringing in outside air that mixes with the inside air. The temperature at which the air is saturated and can no longer hold the moisture is called dew point. When dew point is reached, the air can no longer hold in moisture causing excess moisture to be released in the form of condensation.

Droplets form on the Warm Air Side

Condensation occurs at cold surface areas. Cold transfers through metal that is exposed to outside temperatures and forms on the warm air side. An example of this is a water glass with ice. The outside of the glass can become wet as the condensation forms on the warm air side. Visible condensation can be controlled by reducing the cold surface areas. Heat Movement Heat always moves towards a cooler area. There are (3) different ways that heat is transferred; conduction, convection, and radiation. CONDUCTION is a direct heat exchange through an object like steel panels, studs, or steel purlins. It can be slowed down with proper insulation such as fiberglass. CONVECTION is the transfer of heat through the air. Heat loss can be prevented by sealing all leaks and holes where air can move. RADIATION is the movement of heat in open areas. Examples of this are, the sun heating the earth or a wood stove radiating heat from the steel into the open air. Radiation heat loss can be reduced by using a reflective barrier.

Ventilation

Letting outside air into your building and letting warm moist air escape, is critical and an effective solution that minimizes condensation. This is easy to implement in attics or roofs with airspace above the insulation systems with ridge vents or end wall louvers. (Visit **www.metalbuildingaccessories.com** for more info on vents.) In cases where a metal building is insulated from the underside of the existing roof deck there is very little if no area to ventilate above the insulation. In these cases, the insulation blankets should come in contact with the outside panel, filling the cavity and not leaving any room for airspace. The area below the insulation can be ventilated by mixing outside air with inside moist air. There are several indoor variables that put out an extremely high content of moisture, making ventilation crucial such as job site space heaters or livestock. In horse facilities, each horse perspires approximately (2) gallons of moisture into the air each day. This does not include the moisture in the air from urine or other factors.

Without ventilation or air exchanges, moisture will collect on the roof and create a moist environment which can lead to respiratory ailments and fungal Condensation in Metal Buildings Droplets form on the Warm Air Side growth. A good barn building design has enough ventilation to ensure six to eight air changes per hour. Although ventilation helps minimize condensation, it is not always enough. It is necessary to have a facing or vapor retarder on the insulation. In addition, care should be taken to seal the vapor retarder which helps prevent air leaks or to keep warm moist air from reaching the colder

structural components. Proper sealing of air barriers, side laps, end laps, windows, doors, and foundation sills is critical to the facing or vapor barrier performance. Moisture laden air can also transfer through joints, tears and penetrations such as lights or piping.

Concealed Condensation

Concealed condensation is one of the most difficult and damaging types of condensation. Typically, concealed condensation occurs on the underside of the steel roof deck when the roof insulation is not in contact with the roof panel, causing trapped warm air to come in contact with the outer panel. When we see concealed condensation we often find that the facing or vapor retarder is not sealed properly for the moisture levels and the ventilation is not adequate in the building.

Condensation in Existing Buildings

Condensation in existing metal buildings happens because there is no insulation, not enough insulation, or the existing fiberglass or facing is old and torn creating air leaks. Fortunately, there are ways to help prevent or reduce any of these problems. With high energy costs there is a growing trend to seal air leaks as well as add insulation to existing metal buildings. This is referred to as an insulation retrofit. **Retrofitting insulation** between purlins or wall girts not only saves on energy bills, but it also addresses any existing condensation issues. Typically, structural members (roof purlins or wall girts) are 8” deep. It is recommended in retro fit jobs that the entire 8” cavity is filled with insulation to avoid creating an air space between the roof panel and insulation. This is important because air spaces can cause condensation to frequently form on the inside of the cold surface of the exterior panel. In most cases, metal building insulation was installed upon construction between the roof or wall panels and steel roof purlins or steel wall girts. This type of install causes there to be a substantial heat loss at the area where the insulation blankets were compressed between the purlins and wall girts. The positive factors with this type of install is that the vapor barrier is continuous, and the compressed insulation gives some thermal break between the outside panels and structural members. This thermal break is important in an insulation retro fit to help avoid condensation in the inside where the structural members are exposed. Adding faced fiberglass blankets to fill the entire cavity, in addition to the existing thermal break will help prevent any further condensation from forming against the exterior panels or the exposed steel members.

Condensation issues are more difficult to address in cases where there is no insulation previously installed between the outside panels and structural members. This is because there is no thermal break between structural members and the outside panels making it easy for cold to transfer from one metal to another, eventually making it into the building. Once the cavities

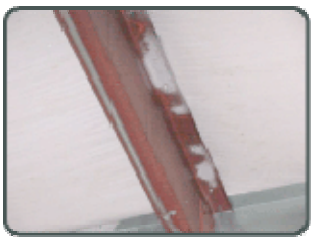

between the purlins are filled with faced fiberglass and heat is introduced into the building, condensation or frost can still form at the bottom of the structural members. To help avoid this, a thermal break tape or strips of rigid board insulation can be installed at the bottom of the purlin or girt.

Recommendations for New Buildings

Long Term cost of ownership should be the governing element in determining a new building's insulation needs. For any climate controlled building, we recommend a good quality vapor retarder facing as well as an insulation thickness that gives you the lowest cost of ownership. Local codes may govern the insulation minimums that are required. It is important that these codes are verified by the owner or contractor prior to making an insulation order.

Metal building insulation offers several different options. Care should be taken to seal the vapor retarder facings and or provide a continuous covering such as polypropylene to help prevent the passage of vapor into the fiberglass blankets. A continuous vapor barrier will help prevent moisture from working its way into the fiberglass. It is also important to provide a thermal break at each roof purlin or wall girt to prevent heat or cold transfer. Thermal breaks are achieved by either laying insulation over the top of the girts and or purlins before the panels are screwed down; with ¼" Thermal Break Tape; or with ½" or 1" Thermal Blocks.

In most cases constructors of new metal buildings compress up to 6" R-19 faced blankets between the girts and/or purlins and the exterior panels. Any insulation over 6" used in this method can cause the roof and walls to bow, creating waves. The insulation over the top of the red iron acts as a thermal break, however, it does not provide a high R-Value because it is limited to 6" insulation.

Metal building roof purlins and wall girts are typically 8" deep. Filling the entire 8" cavity equals an R-25 system. This is often overlooked by building professionals such as architects who specify R-32 up to R-36 systems. They neglect to mention to the building supplier that the 8" purlin depth does not meet the required 10" R-32 or 12" R-36 fiberglass thickness. An installer may compress R-32 10" system into an 8" space to meet requirements, which in turn only gives the owner at best an R-25 performance.

Double layer, high R-Value systems work well to prevent condensation. Pre-cut fiberglass blankets are factory cut to fit between the roof purlins. These fiberglass blankets are held up by steel banding fastened to the bottom of the roof purlins prior to the installation of the roof panels. The pre-cut

fiberglass blankets or rolls are laid between the purlins as the roof panels are installed. These blankets come with a “long tab” which is an extension of the polypropylene facing and is around 10” to 12” long. The tab is placed over the purlin prior to the placement of the top layer of insulation and the roof panel installation. Overlapping the tabs creates a continuous seal for the facing or vapor retarder. Without this you will have a break in the facing at each purlin which allows warm air or moisture to work up through the insulation edges. We have seen condensation occur on the bottom side of the roof panel when the facings were not sealed. Once this insulation is installed, unfaced fiberglass blankets are laid over the top of the purlins and girts before the exterior panels are installed. This gives a high R-Value, a continuous vapor barrier, and a thermal break.

Cold transferred through the metal and formed condensation on the warm air side.

For more information on proper installation of metal building insulation to help with condensation issues visit www.steelbuildinginsulation.com.

• Corroded roofing panel & jack

• Missing ridge flashing, South side

• Daylight through roof opening

• Insulation gaps

• Overhead doors