HAINES SEWER SYSTEM

Haines Borough,
Alaska

2016 WASTEWATER TREATMENT PLANT UPGRADE

Carson Dorn Inc.

712 WEST 12TH STREET
JUNEAU, ALASKA 99801
(907) 586-4447

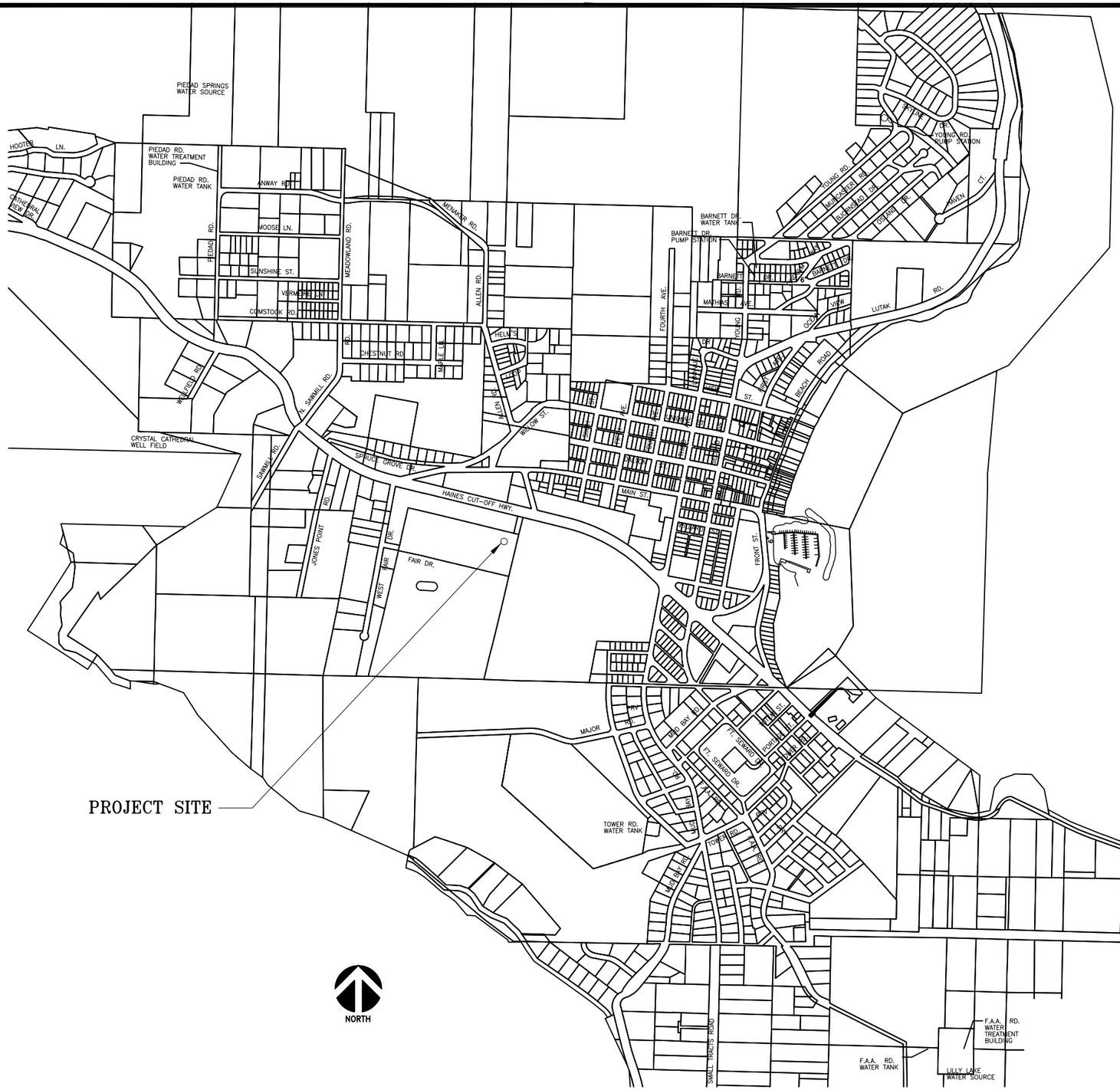

DRAWING INDEX

SHEET No.	DWG No.	DRAWING TITLE
	GENERAL	
1	G-1	COVER
2	G-2	HAINES VICINITY MAP & DRAWING INDEX
3	G-3	SYMBOLS
	DEMOLITION	
4	D-1	EXISTING SOLIDS BUILDING DEMOLITION
5	D-2	DEMOLITION EXISTING WATEWATER TREATMENT PLANT FLOOR PLAN
6	D-3	REMOVE EXISTING WASTEWATER TREATMENT PLANT BUILDING
	PHOTOS	
7	P-0	PHOTOS LOCATION
8	P-1	PHOTOS
9	P-2	PHOTOS
10	P-3	PHOTOS
11	P-4	PHOTOS
12	P-5	PHOTOS
13	P-6	PHOTOS
14	P-7	PHOTOS
15	P-8	PHOTOS
	ARCHITECTURAL	
16	A-1	NEW WASTEWATER TREATMENT PLANT BUILDING
17	A-2	BOILER ROOM AND CONTROL ROOM PLAN
18	A-3	NEW CONTROL ROOM STRUCTURAL SECTIONS, & DETAILS
19	A-4	EXISTING TREATMENT BUILDING PLAN
20	A-5	EXISTING SOLIDS BUILDING FRAMING ELEVATIONS
21	A-6	SOLIDS BUILDING NEW ROOFING & SIDING
22	A-7	NEW CONTROL ROOM STRUCTURAL SECTIONS, & DETAILS
	CIVIL	
23	C-1	NEW EFFLUENT LINE
24	C-2	NEW EFFLUENT LINE DETAIL
	MECHANICAL	
25	M-1	MAGNETIC FLOW METER & WASH DOWN PIPING
26	M-2	MAGNETIC FLOW METER & WASH DOWN PIPING DETAILS
	ADDITIVE ALTERNATE NO. 1	
27	AA-1.1	AA-1 INFLUENT SCREEN EQUIPMENT & PIPING DEMOLITION
28	AA-1.2	AA-1 INFLUENT SCREENS EQUIPMENT & PIPING PLAN
29	AA-1.3	AA-1 INFLUENT SCREENS DETAILS
	ELECTRICAL	
1	E-1	LEGEND, DETAILS
2	E-2	TREATMENT PLANT – EXISTING POWER
3	E-3	TREATMENT PLANT – EXISTING POWER
4	E-4	TREATMENT PLANT – NEW POWER
5	E-5	TREATMENT PLANT – NEW POWER
6	E-6	ENLARGED BOILER & ELECTRICAL ROOM POWER
7	E-7	SINGLE LINE DIAGRAM, MECHANICAL EQUIPMENT SCHEDULE
8	E-8	CONTROL DIAGRAMS, PANEL SCHEDULE
9	E-9	TREATMENT PLANT – LIGHTING
10	E-10	ENLARGED BOILER & ELECTRICAL ROOM LIGHTING, LUMINAIRE SCHEDULE
	HEATING	
1	H-1	SYMBOLS AND SCHEDULES
2	H-2	FLOOR PLAN
3	H-3	ENLARGED PLAN AND PIPING DIAGRAMS
4	H-4	DETAILS AND CONTROLS

REV	DATE	BY	DESCRIPTION

SCALE GRAPHIC
DESIGNED JLD
DRAWN GDM
CHECKED JLD
DATE OCT 2016

Haines Borough, Alaska

HAINES BOROUGH

2016 WASTEWATER TREATMENT PLANT UPGRADE

STATE OF ALASKA 49TH JAMES L. DORN CE 5323 10/13/16 REGISTERED PROFESSIONAL ENGINEER

Carson Dorn Inc.
712 WEST 12TH STREET
JUNEAU, ALASKA 99801
(907) 586-4447

HAINES VICINITY MAP & DRAWING INDEX

DRAWING G-2

SHEET No. 2 of 29

ENGDM:2CAD\SE_AK\HAINES\2016 WASTEWATER TREATMENT PLANT BUILDING UPGRADE\2016 HAINES WASTEWATER UPDATES G2-SITEPLN.DWG 10/13/2016 3:31:15 PM AST

MASONRY
CAST IRON
STEEL
BRONZE
INSULATION
GRAVEL
CONCRETE
EARTH
SAND
ALUMINUM OR METAL DECKING
CHECKERED PLATE
SPAN GRATING
PLASTIC, RUBBER OR NEOPRENE
WOOD (FINISH)
WOOD (ROUGH FRAMING) OR, OPENING OR DEPRESSION IN SLAB OR WALL
12 X 24 DUCT (FIRST DIMENSION DUCT SIDE SHOWN, SECOND DIMENSION DUCT SIDE NOT SHOWN)
24 X 12 SUPPLY OR OUTSIDE AIR DUCT (FIRST DIMENSION, DUCT WIDTH)
24 X 12 EXHAUST OR RETURN AIR DUCT (FIRST DIMENSION, DUCT WIDTH)
SIZE CFM CEILING SUPPLY DIFFUSER (SIZE IN INCHES)
SIZE CFM CEILING RETURN OR EXHAUST AIR GRILLE OR REGISTER (SIZE IN INCHES, WIDTH X HEIGHT
SIZE CFM EXHAUST OR RETURN AIR GRILLE OR REGISTER (SIZE IN INCHES, WIDTH X HEIGHT)
SIZE CFM SUPPLY GRILLE OR REGISTER (SIZE IN INCHES, WIDTH X HEIGHT)
AIR TURNING VANES IN DUCT
DD DEFLECTING DAMPER
FHC FIRE HOSE CABINET
FE FIRE EXTINGUISHER
UNIT HEATER
CENTERLINE
PROPERTY LINE
NEW STRUCTURE OR FACILITY
EXISTING STRUCTURE OR FACILITY
FUTURE STRUCTURE OR FACILITY
NEW FENCE
EXISTING FENCE
NEW PIPELINE (CIVIL SHEETS) 36" DIA. AND LARGER
NEW PIPELINE (CIVIL SHEETS) 12" DIA. TO 34" DIA.
NEW PIPELINE (CIVIL SHEETS) 10" DIA. AND SMALLER
EXISTING PIPELINE

123 CONTOUR LINE, FINISHED GRADE
123 CONTOUR LINE, EXISTING GRADE
123.20 FINISHED ELEVATION
(123.20) EXISTING ELEVATION
TOP TOE CUT OR FILL SLOPE TO BE CONSTRUCTED
NEW A.C. PAVING
EXISTING A.C. PAVING
RAILING
FH FIRE HYDRANT
MH MANHOLE
PCOTG PRESSURE CLEANOUT TO GRADE
WCO WALL CLEANOUT
FCO FLOOR CLEANOUT
COTG CLEANOUT TO GRADE
BLOW OFF ASSEMBLY
HUB DRAIN
FLOOR DRAIN
FLOOR SINK
DRAIN TRAP
SOIL BORING OR STRUCTURE WORK POINT
BENCH MARK
VAULT OR JUNCTION STRUCTURE
CHANGE IN PIPING MATERIAL
CONNECT TO EXISTING SYSTEM
Ø ROUND OR DIAMETER
SQUARE
AT
ANGLE
24" RCP-RW PIPE SIZE AND TYPE/FLUID ABBREVIATION
2" UW (2) PIPE CALLOUT (SEE PIPING SCHEDULE)
ME-2 EQUIPMENT NUMBER (SEE EQUIPMENT SCHEDULE) OR WORKPOINT CALLOUT FOR PIPING AND/OR STRUCTURE
BACKWATER VALVE
BACKFLOW PREVENTER
STOP GATE
SLIDE GATE
SLUICE GATE
MIXING VALVE

GATE VALVE, BURIED WITH VALVE BOX
BUTTERFLY VALVE, BURIED WITH VALVE BOX
ECCENTRIC PLUGVALVE, BURIED WITH VALVE BOX
LUBRICATED PLUG VALVE, BURIED WITH VALVE BOX
GATE VALVE
BUTTERFLY VALVE
ECCENTRIC PLUG VALVE
LUBRICATED PLUG VALVE
GLOBE VALVE
BALL VALVE
DIAPHRAGM VALVE
CHECK VALVE
PRESSURE REGULATING VALVE
BACK-PRESSURE VALVE
M P MOTOR OPERATOR FOR VALVES (M - ELECTRIC, P - PNEUMATIC)
T TEMPERATURE CONTROL VALVE
S SOLENOID VALVE
MULTIPORT VALVE - 3 WAY
MULTIPORT VALVE - 4 WAY
FLOAT OPERATED VALVE
NEEDLE VALVE
PRESSURE RELIEF VALVE
ANGLE VALVE
HOSE BIBB (H/B)
BUBBLER LEVEL CONTROL
CENTRIFUGAL OR TURBINE PUMP OR FAN
METERING PUMP
PROGRESSING CAVITY, POSITIVE DISPLACEMENT PUMP
BLOWER OR COMPRESSOR
INJECTOR OR EDUCTOR
F/A FLAME ARRESTER
AIR VACUUM AND AIR RELEASE ASSEMBLY
THERMOMETER
PIPE ANCHOR

T ROOM THERMOSTAT
PRESSURE GAUGE
PRESSURE GAUGE WITH DIAPHRAGM SEAL
PRESSURE SWITCH
PRESSURE SWITCH WITH DIAPHRAGM SEAL
FLANGED FITTING
WELDED FITTING
MECHANICAL-TYPE FITTING (GROOVED)
SCREWED, SOCKET-WELD, BELL AND SPIGOT OR HUBLESS FITTING
SLEEVE-TYPE COUPLING
FLANGED ADAPTER COUPLING
FLANGED ADAPTER - SET SCREW TYPE
EXPANSION JOINT
MECHANICAL TYPE COUPLING
FLEXIBLE COUPLING
UNION
QUICK DISCONNECT COUPLER
CAPPED END OR PLUGGED END
BLIND FLANGE
REDUCER OR INCREASER
CUT PIPE
STRAINER
DRAIN
FLOW TUBE
MAGNETIC METER
DENSITY METER
PROPELLER METER
ORIFICE PLATE AND FLANGES
ROTAMETER
T CONDENSATE TRAP
PIPE SUPPORT (IN PLAN ONLY)
CB CATCH BASIN
PULSATION DAMPENER
T WORKPOINT CALLOUT FOR PIPING AND/OR STRUCTURE
P WORKPOINT CALLOUT FOR STRUCTURE
STRUCTURE WORKPOINT REFERENCE POINT

SECTION AND DETAIL IDENTIFICATION

SECTION IDENTIFICATION

(1) SECTION CUT ON DRAWING G-1:

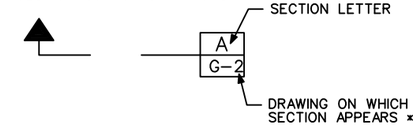

(2) ON DRAWING G-2 THIS SECTION IS IDENTIFIED AS:

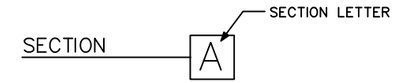

DETAIL IDENTIFICATION - VARIES

(1) DETAIL SHOWN ON DRAWING G-1 AS:

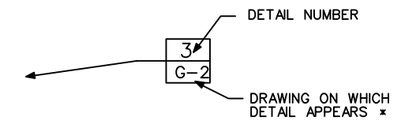

*NOTE: IF PLAN AND SECTION (OR DETAIL CALL-OUT AND DETAIL) ARE SHOWN ON SAME DRAWING, DRAWING NUMBER IS REPLACED BY A LINE.

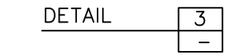

(2) ON DRAWING G-2 THIS DETAIL IDENTIFIED AS:

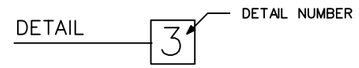

NOTES:

(1) ELECTRICAL SYMBOLS SHOWN ON ELECTRICAL SHEETS.

(2) FOR WELDING SYMBOLS USE AMERICAN WELDING SOCIETY STANDARD SYMBOLS. SEE AMERICAN INSTITUTE OF STEEL CONSTRUCTION MANUAL.

REV	DATE	BY	DESCRIPTION

SCALE GRAPHIC
DESIGNED JLD
DRAWN GDM
CHECKED JLD
DATE OCT 2016

Haines Borough, Alaska

HAINES BOROUGH
2016 WASTEWATER TREATMENT PLANT UPGRADE

STATE OF ALASKA 49TH JAMES L. DORN CE 5321 10/13/16 REGISTERED PROFESSIONAL ENGINEER

Carson Dorn Inc.
712 WEST 12TH STREET
JUNEAU, ALASKA 99801
(907) 586-4447

SYMBOLS

DRAWING G-3

SHEET No. 3 of 29

10/13/2016 3:31:15 PM AST
E:\GDM\2CAD\SE_AK\HAINES\2016 WASTEWATER TREATMENT PLANT\PLANT\PLANT UPGRADE\HAINES WASTEWATER UPDATES G3.DWG

NOTE:
SOUTH, EAST WALL AND ROOF ARE PART OF ADD ALT 2.
NORTH WALL IS PART OF BASE BID.

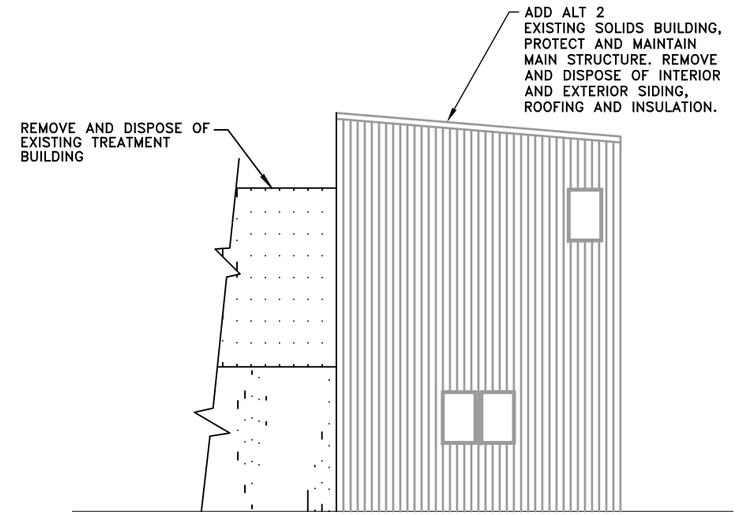

WEST ELEVATION

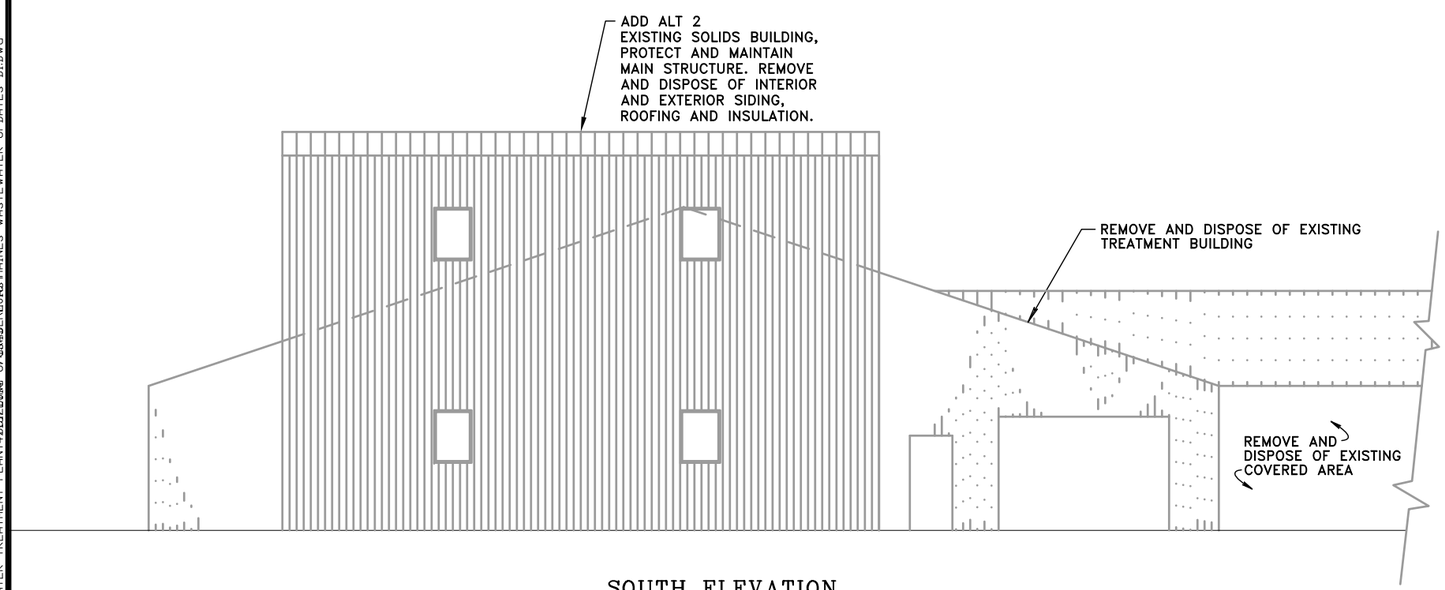

SOUTH ELEVATION

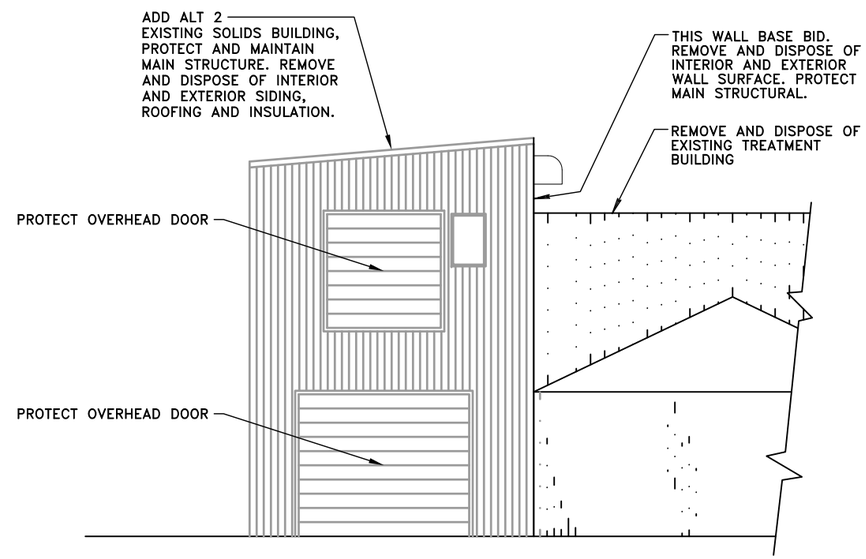

EAST ELEVATION

1 0 5 10 15 FEET
(3/32" = 1'-0" UNLESS DRAWING IS REDUCED

REV	DATE	BY	DESCRIPTION

SCALE GRAPHIC
DESIGNED JLD
DRAWN GDM
CHECKED JLD
DATE OCT 2016

Haines Borough, Alaska

HAINES BOROUGH

2016 WASTEWATER TREATMENT PLANT UPGRADE

STATE OF ALASKA 49TH JAMES L. DORN CE 8324 10/13/16 REGISTERED PROFESSIONAL ENGINEER

Carson Dorn Inc.
712 WEST 12TH STREET
JUNEAU, ALASKA 99801
(907) 586-4447

EXISTING SOLIDS BUILDING DEMOLITION

DRAWING D-1

SHEET No. 4 of 29

10/13/2016 3:31:15 PM AST
EX:GDM:2CAD\SE_AK\HAINES\2016 WASTEWATER TREATMENT PLANT4.DWG 10/13/2016 UPDATED BY:GDM 10/13/2016 HAINES WASTEWATER UPDATES D1.DWG

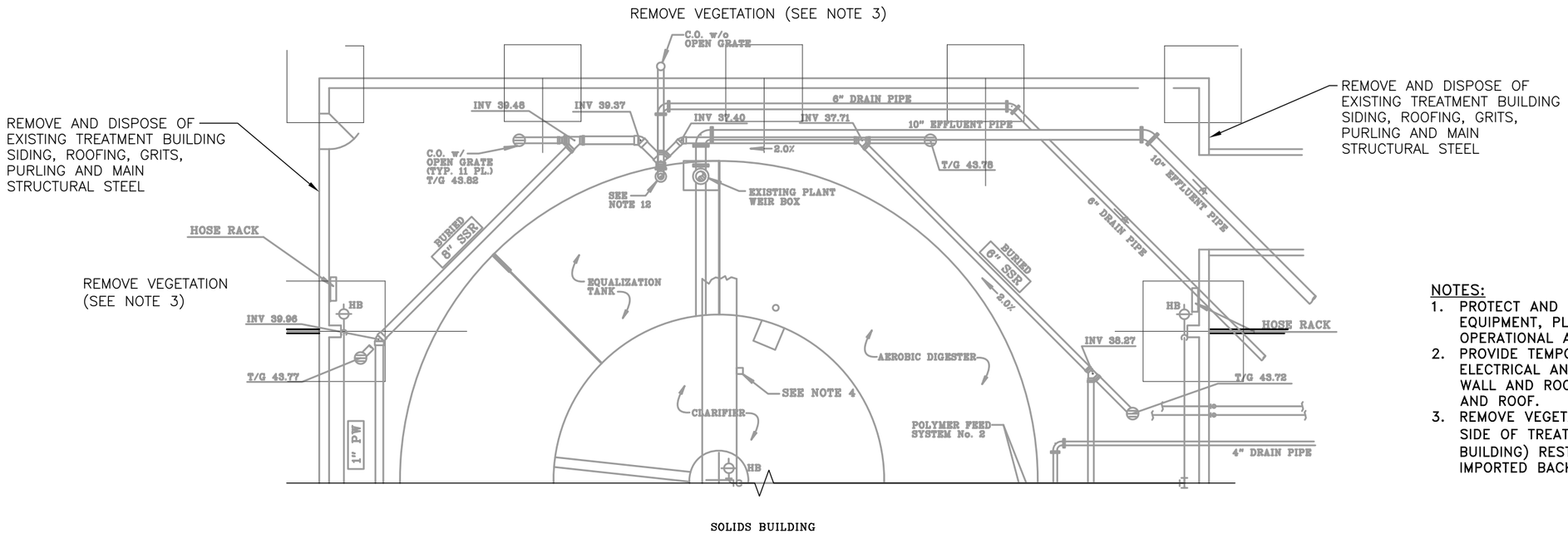

NOTES:

1. PROTECT AND MAINTAIN ALL EXISTING EQUIPMENT, PLANT SHALL BE KEPT FULLY OPERATIONAL AT ALL TIMES.
2. PROVIDE TEMPORARY SUPPORT FOR ELECTRICAL AND PIPING SUPPORTED FROM WALL AND ROOF. REATTACH TO NEW WALLS AND ROOF.
3. REMOVE VEGETATION ON NORTH AND WEST SIDE OF TREATMENT BUILDING. (20' FROM BUILDING) RESTORE EXISTING GRADE W/ IMPORTED BACKFILL. DISPOSE OF VEGETATION.

NORTH

1 0 5 10 15 FEET

(3/16" = 1'-0" UNLESS DRAWING IS REDUCED)

REV	DATE	BY	DESCRIPTION

SCALE GRAPHIC
DESIGNED JLD
DRAWN GDM
CHECKED JLD
DATE OCT 2016

Haines Borough, Alaska

HAINES BOROUGH

2016 WASTEWATER TREATMENT PLANT UPGRADE

STATE OF ALASKA 49TH JAMES L. DORN CE 5323 10/13/16 REGISTERED PROFESSIONAL ENGINEER

Carson Dorn Inc.
712 WEST 12TH STREET
JUNEAU, ALASKA 99801
(907) 586-4447

DEMOLITION EXISTING WATEWATER TREATMENT PLANT FLOOR PLAN

DRAWING D-2

SHEET No. 5 of 29

E:\GDM\2CAD\SE_AK\HAINES\2016 WASTEWATER TREATMENT PLANT BUILDING UPGRADE\2016 HAINES WASTEWATER UPDATES D2.DWG 10/13/2016 3:31:15 PM AST

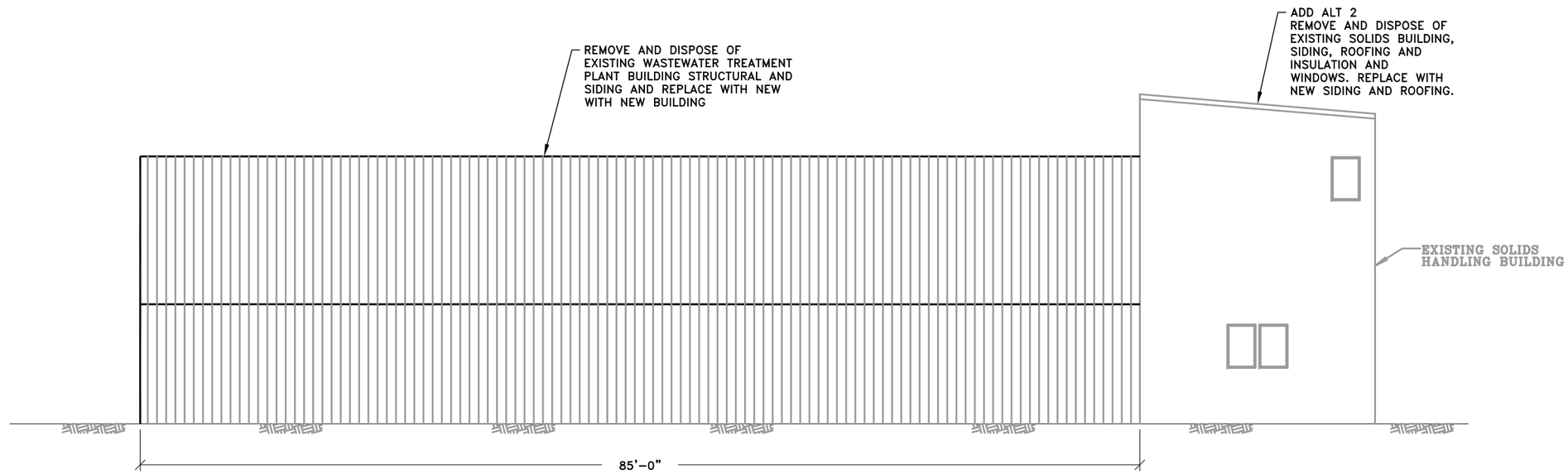

WEST ELEVATION

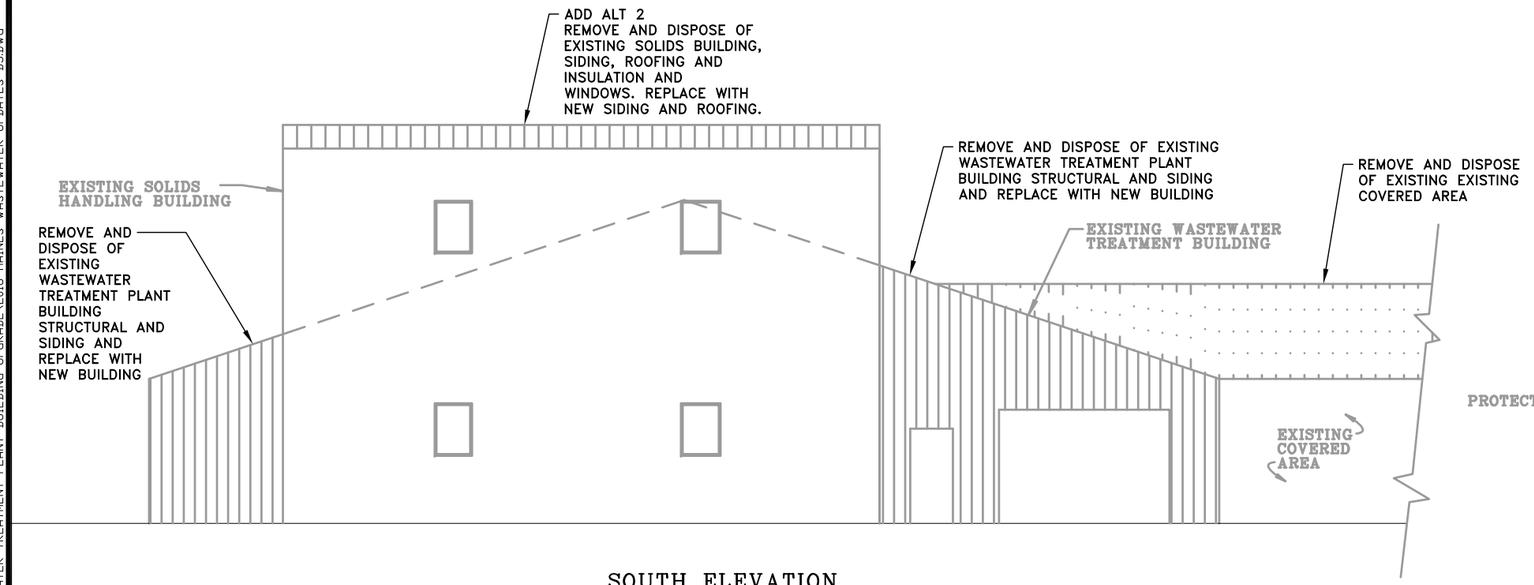

SOUTH ELEVATION

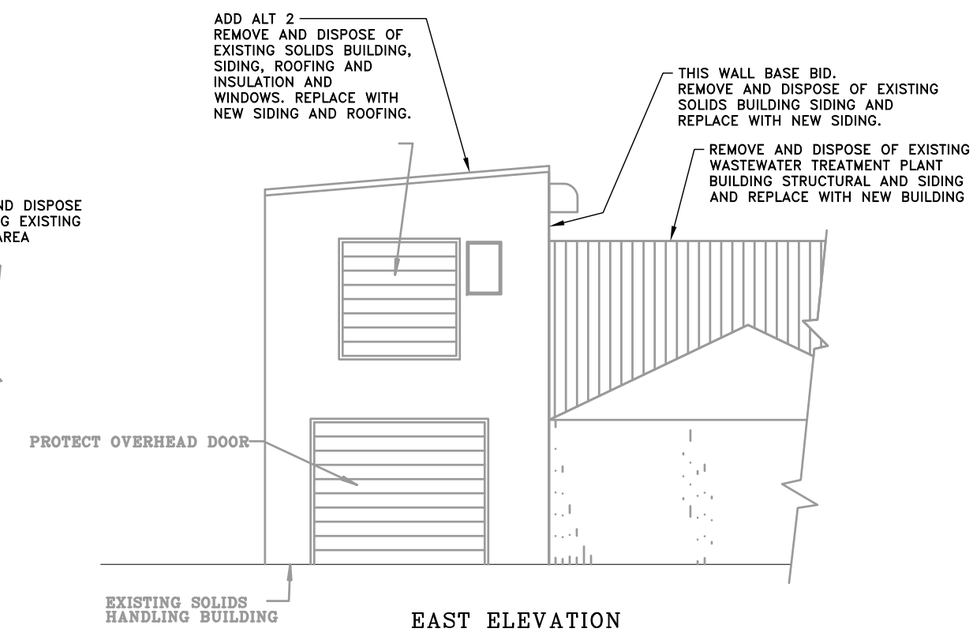

EAST ELEVATION

1 0 5 10 15 FEET
(3/16" = 1'-0" UNLESS DRAWING IS REDUCED)

REV	DATE	BY	DESCRIPTION

SCALE GRAPHIC
DESIGNED JLD
DRAWN GDM
CHECKED JLD
DATE OCT 2016

Haines Borough, Alaska

HAINES BOROUGH
2016 WASTEWATER TREATMENT PLANT UPGRADE

STATE OF ALASKA 49TH JAMES L. DORN CE 5323 10/13/16 REGISTERED PROFESSIONAL ENGINEER

Carson Dorn Inc.
712 WEST 12TH STREET
JUNEAU, ALASKA 99801
(907) 586-4447

REMOVE EXISTING WASTEWATER TREATMENT PLANT BUILDING

DRAWING D-3

SHEET No. 6 of 29

E:\GDM\2CAD\SE_AK\HAINES\2016 WASTEWATER TREATMENT PLANT BUILDING UPGRADE\2016 HAINES WASTEWATER UPDATES D3.DWG
10/13/2016 3:31:15 PM AST

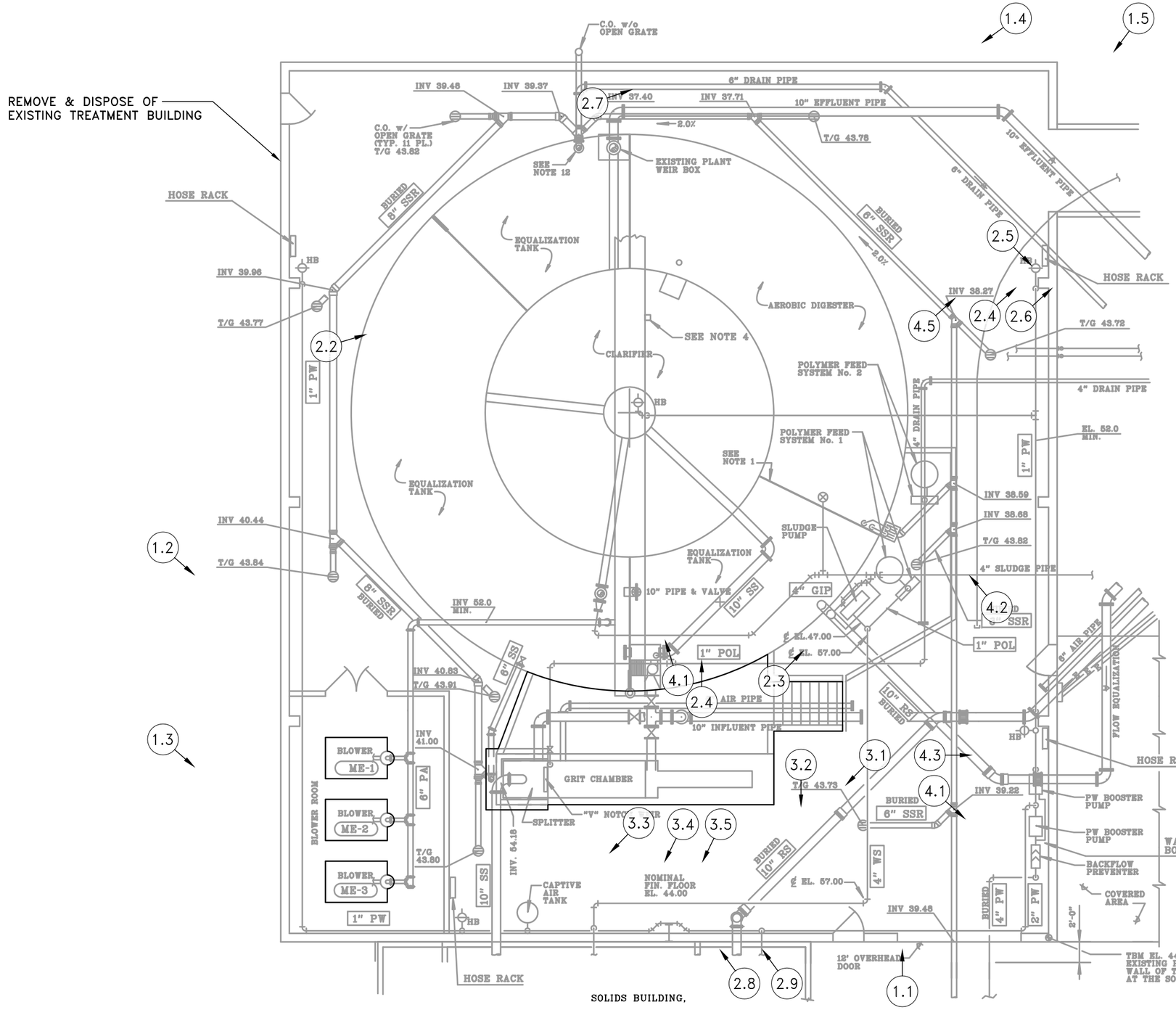

NOTES:

1. PROTECT AND MAINTAIN ALL EXISTING EQUIPMENT, PLANT SHALL BE KEPT FULLY OPERATIONAL AT ALL TIMES.
2. PROVIDE TEMPORARY SUPPORT FOR ELECTRICAL AND PIPING SUPPORTED FROM WALL AND ROOF. REATTACH TO NEW WALLS AND ROOF.
3. PHOTO LOCATIONS SHOW LOCATION AND DIRECTION OF PHOTO.
4. X.X
   - PHOTO NUMBER ON SHEET
   - PHOTO SHEET NUMBER

NORTH

1 0 5 10 15 FEET
(3/16" = 1'-0" UNLESS DRAWING IS REDUCED)

REV	DATE	BY	DESCRIPTION

SCALE GRAPHIC
DESIGNED JLD
DRAWN GDM
CHECKED JLD
DATE OCT 2016

Haines Borough, Alaska

HAINES BOROUGH

2016 WASTEWATER TREATMENT PLANT UPGRADE

STATE OF ALASKA 49TH JAMES L. DORN CE 5323 10/13/16 REGISTERED PROFESSIONAL ENGINEER

Carson Dorn Inc.
712 WEST 12TH STREET
JUNEAU, ALASKA 99801
(907) 586-4447

PHOTO LOCATIONS

DRAWING P-0

SHEET No. 7 of 29

10/13/2016 3:31:15 PM AST

E:\GDM\2CAD\SE_AK\HAINES\2016 WASTEWATER TREATMENT PLANT BUILDING UPGRADE\2016 HAINES WASTEWATER UPDATES P0.DWG

P-1.1

P-1.2

P-1.3

NOTES

1. REMOVE AND DISPOSE EXISTING WWTP BUILDING AND REPLACE WITH NEW BUILDING.
2. REMOVE AND DISPOSE OF EXISTING COVERED WALKWAY.
3. REMOVE AND DISPOSE OF EXISTING OVERHEAD DOOR AND REPLACE WITH NEW 8'W X 10'H OVERHEAD DOOR.
4. ADD ALT 2. REMOVE SIDING ON SOLIDS BUILDING. PROVIDE CONNER TRIM FOR LEAK PROOF CONNECTION.
5. REMOVE AND DISPOSE EXISTING WASTEWATER TREATMENT PLANT BUILDING AND REPLACE WITH NEW BUILDING.
6. REMOVE AND DISPOSE OF EXISTING WASTE OIL BURNER STACK.
7. BASE BID THIS WALL. REMOVE AND DISPOSE WALL SIDING AND ROOFING FOR EXISTING SOLIDS HANDING BUILDING. REPLACE WITH NEW SIDING AND ROOFING.
8. PROVIDE FLASHING FOR CONNECTION BETWEEN EXISTING SOLIDS HANDLING BUILDING AND NEW BUILDING FOR LEAK PROOF CONNECTION.
9. PROVIDE NEW SIDING ON EXPOSED FACES OF NEW WWTP BUILDING.
10. REMOVE AND DISPOSE OF EXHAUST FROM EXISTING HEATING

REV	DATE	BY	DESCRIPTION

SCALE GRAPHIC
DESIGNED JLD
DRAWN GDM
CHECKED JLD
DATE OCT 2016

Haines Borough, Alaska

HAINES BOROUGH

2016 WASTEWATER TREATMENT PLANT UPGRADE

STATE OF ALASKA 49TH JAMES L. DORN CE 5323 10/13/16 REGISTERED PROFESSIONAL ENGINEER

Carson Dorn Inc.
712 WEST 12TH STREET
JUNEAU, ALASKA 99801
(907) 586-4447

PHOTOS

DRAWING P-1

SHEET No. 8 of 29

E:\GDM\2CAD\SE_AK\HAINES\2016 WASTEWATER TREATMENT PLANT BUILDING UPGRADE\2016 HAINES WASTEWATER UPDATES P1-8.DWG 10/13/2016 3:31:15 PM AST

P-1.4

P-1.5

P-2.1

NOTES

1. REMOVE AND DISPOSE EXISTING WWTP BUILDING AND REPLACE WITH NEW BUILDING.
2. PROVIDE FLASHING FOR CONNECTION BETWEEN EXISTING ENCLOSED WALKWAY AND NEW BUILDING FOR LEAK PROOF CONNECTION.
3. PROTECT AND MAINTAIN EXISTING ENCLOSED WALKWAY.
4. REMOVE AND DISPOSE EXISTING WASTEWATER TREATMENT PLANT BUILDING MAIN STRUCTURAL STEEL AND REPLACE WITH NEW HOT DIP GALVANIZED STRUCTURAL STEEL.
5. REMOVE AND DISPOSE EXISTING WASTEWATER TREATMENT PLANT BUILDING PURLINS AND REPLACE WITH NEW HOT DIP GALVANIZED PURLINS.
6. REMOVE AND DISPOSE EXISTING WASTEWATER TREATMENT PLANT BUILDING GIRTS AND REPLACE WITH NEW HOT DIP GALVANIZED PURLINS.

REV	DATE	BY	DESCRIPTION

SCALE GRAPHIC
DESIGNED JLD
DRAWN GDM
CHECKED JLD
DATE OCT 2016

Haines Borough, Alaska

HAINES BOROUGH

2016 WASTEWATER TREATMENT PLANT UPGRADE

STATE OF ALASKA 49TH JAMES L. DORN CE 5323 10/13/16 REGISTERED PROFESSIONAL ENGINEER

Carson Dorn Inc.
712 WEST 12TH STREET
JUNEAU, ALASKA 99801
(907) 586-4447

PHOTOS

DRAWING P-2

SHEET No. 9 of 29

E:\GDM\2CAD\SE_AK\HAINES\2016 WASTEWATER TREATMENT PLANT BUILDING UPGRADE\2016 HAINES WASTEWATER UPDATES P1-8.DWG 10/13/2016 3:31:15 PM AST

P-2.2

P-2.3

P-2.4

NOTES

1. REMOVE AND DISPOSE EXISTING WWTP BUILDING HEATING DUCT.
2. REMOVE AND DISPOSE EXISTING WASTEWATER TREATMENT PLANT BUILDING PURLINS AND REPLACE WITH NEW HOT DIP GALVANIZED PURLINS.
3. PROVIDE TEMPORARY SUPPORT AND PROTECT AND MAINTAIN EXISTING LIGHTING THROUGHOUT CONSTRUCTION.
4. REMOVE AND DISPOSE EXISTING WASTEWATER TREATMENT PLANT BUILDING MAIN STRUCTURAL STEEL AND REPLACE WITH NEW HOT DIP GALVANIZED STRUCTURAL STEEL.
5. REMOVE AND DISPOSE EXISTING WASTEWATER TREATMENT PLANT BUILDING MAIN STRUCTURAL STEEL AND REPLACE WITH NEW HOT DIP GALVANIZED STRUCTURAL STEEL.
6. PROVIDE TEMPORARY SUPPORT AND PROTECT AND MAINTAIN EXISTING WATER WASHDOWN SYSTEM THROUGHOUT CONSTRUCTION. REMOVE SYSTEM AND REPLACE WITH NEW PVC PIPE ONCE CONSTRUCTION OF NEW BUILDING COMPLETED.
7. REMOVE EXISTING DOOR TO ENCLOSED WALKWAY AND REPLACE WITH NEW 3'-0"x6'-8" EXTERIOR DOOR.

REV	DATE	BY	DESCRIPTION

SCALE GRAPHIC
DESIGNED JLD
DRAWN GDM
CHECKED JLD
DATE OCT 2016

Haines Borough, Alaska

HAINES BOROUGH

2016 WASTEWATER TREATMENT PLANT UPGRADE

STATE OF ALASKA 49TH JAMES L. DORN CE 5323 10/13/16 REGISTERED PROFESSIONAL ENGINEER

Carson Dorn Inc.
712 WEST 12TH STREET
JUNEAU, ALASKA 99801
(907) 586-4447

PHOTOS

DRAWING P-3

SHEET No. 10 of 29

E:\GDM\2CAD\SE_AK\HAINES\2016 WASTEWATER TREATMENT PLANT BUILDING UPGRADE\2016 HAINES WASTEWATER UPDATES P1-8.DWG 10/13/2016 3:31:15 PM AST

P-2.5

P-2.6

P-2.7

NOTES

1. USE EXISTING 1" DIAMETER GALVANIZED STEEL ANCHOR BOLTS FOR MAIN STRUCTURAL STEEL CONNECTION TO EXISTING FOOTINGS. THREE BOLTS ARE PROVIDED ON EACH SIDE OF EACH CONNECTION. CONTRACTOR FIELD CONFIRM BOLT PATTERNS.

2. REMOVE AND DISPOSE EXISTING WWTP BUILDING MAIN STRUCTURAL STEEL AND REPLACE WITH NEW HOT DIP GALVANIZED STRUCTURAL STEEL.

3. REMOVE AND DISPOSE EXISTING WWTP BUILDING END WALL MAIN STRUCTURAL STEEL AND REPLACE WITH NEW HOT DIP GALVANIZED STRUCTURAL STEEL.

4. REMOVE AND DISPOSE OF EXISTING WWTP SWAY BRACING AND REPLACE WITH NEW HOT DIP GALVANIZED SWAY BRACING.

5. USE EXISTING 3/4" DIAMETER GALVANIZED STEEL ANCHOR BOLTS FOR END WALL MAIN STRUCTURAL STEEL CONNECTION TO EXISTING FOOTINGS. ONE BOLT IS PROVIDED ON EACH SIDE OF EACH CONNECTION. CONTRACTOR FIELD CONFIRM BOLT PATTERN.

REV	DATE	BY	DESCRIPTION

SCALE GRAPHIC
DESIGNED JLD
DRAWN GDM
CHECKED JLD
DATE OCT 2016

Haines Borough, Alaska

HAINES BOROUGH

2016 WASTEWATER TREATMENT PLANT UPGRADE

STATE OF ALASKA 49TH JAMES L. DORN CE 5323 10/13/16 REGISTERED PROFESSIONAL ENGINEER

Carson Dorn Inc.
712 WEST 12TH STREET
JUNEAU, ALASKA 99801
(907) 586-4447

PHOTOS

DRAWING P-4

SHEET No. 11 of 29

E:\GDM\2CAD\SE_AK\HAINES\2016 WASTEWATER TREATMENT PLANT BUILDING UPGRADE\2016 HAINES WASTEWATER UPDATES P1-8.DWG 10/13/2016 3:31:15 PM AST

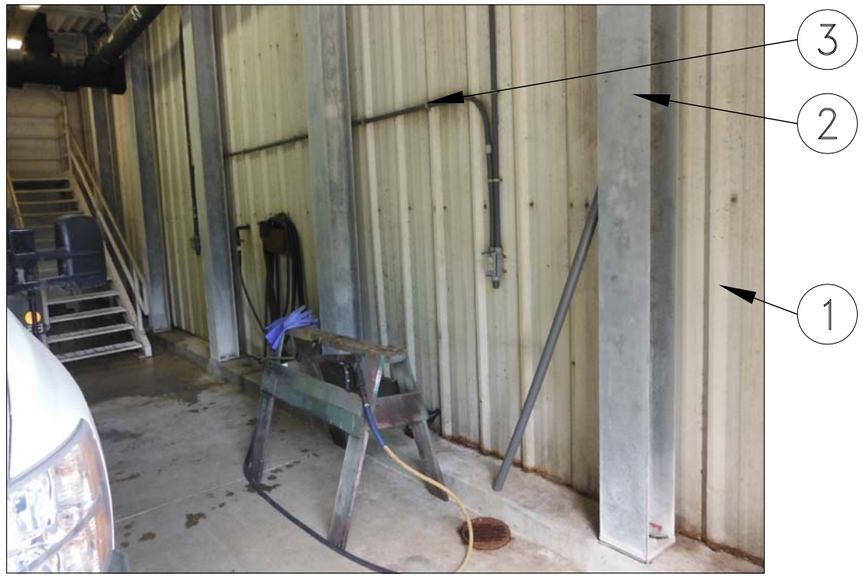

P-2.8

P-2.9

P-3.1

NOTES

1. REMOVE SIDING BETWEEN SOLIDS HANDLING BUILDING AND WWTP. DO NOT INSTALL NEW SIDING BETWEEN TWO BUILDINGS. LEAVE SOLIDS HANDLING BUILDING END WALL MAIN STRUCTURAL STEEL AND HORIZONTAL GIRTS EXPOSED.
2. PROTECT AND MAINTAIN EXISTING SOLIDS HANDLING BUILDING HOT DIP GALVANIZED STRUCTURAL STEEL.
3. RELOCATE EXISTING ELECTRICAL TO NEW HOT DIP GALVANIZED HORIZONTAL GIRTS.
4. PROTECT AND MAINTAIN ALL PROCESS PIPING THROUGHOUT CONSTRUCTION TO ENSURE CONTINUED OPERATION OF THE WWTP.
5. REMOVE AND DISPOSE OF EXHAUST STACK FROM EXISTING WASTE OIL BURNER.
6. REMOVE AND DISPOSE OF EXISTING AIR TANK.
7. REMOVE AND DISPOSE OF EXISTING WASTE OIL BURNER.
8. REMOVE AND DISPOSE OF EXISTING FURNACE.
9. REMOVE EXISTING SIDING BETWEEN SOLIDS HANDLING BUILDING AND NEW WWTP. DO NOT INSTALL NEW SIDING BETWEEN THE TWO BUILDINGS.
10. PROTECT AND MAINTAIN ELECTRICAL CONDUITS THROUGHOUT CONSTRUCTION TO ENSURE CONTINUED OPERATION OF THE WWTP.

REV	DATE	BY	DESCRIPTION

SCALE GRAPHIC
DESIGNED JLD
DRAWN GDM
CHECKED JLD
DATE OCT 2016

Haines Borough, Alaska

HAINES BOROUGH

2016 WASTEWATER TREATMENT PLANT UPGRADE

STATE OF ALASKA 49TH JAMES L. DORN CE 5323 10/13/16 REGISTERED PROFESSIONAL ENGINEER

Carson Dorn Inc.
712 WEST 12TH STREET
JUNEAU, ALASKA 99801
(907) 586-4447

PHOTOS

DRAWING P-5

SHEET No. 12 of 29

10/13/2016 3:31:15 PM AST

E:\GDM\2CAD\SE_AK\HAINES\2016 WASTEWATER TREATMENT PLANT BUILDING UPGRADE\2016 HAINES WASTEWATER UPDATES P1-8.DWG

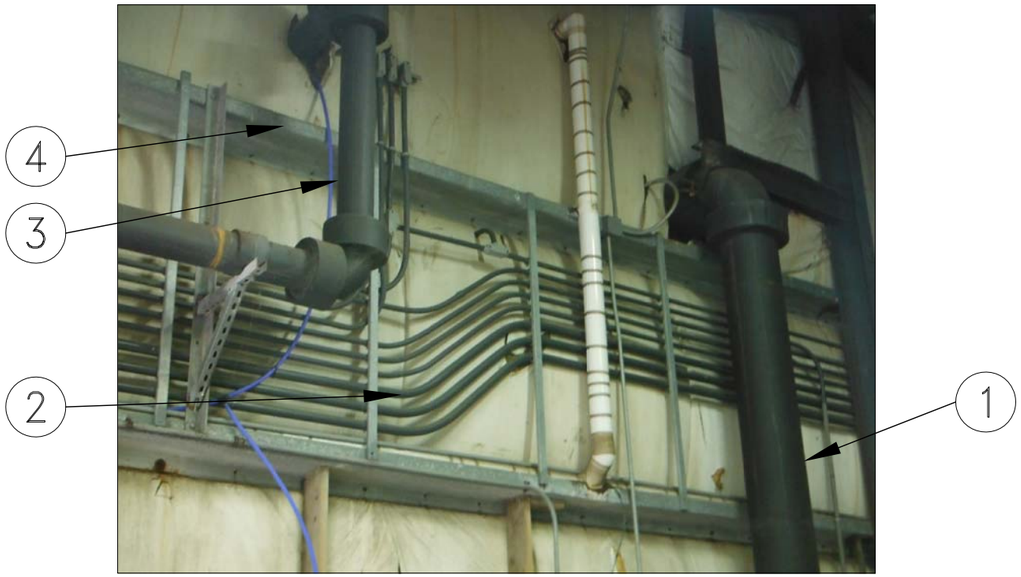

P-3.2

P-3.3

P-3.4

NOTES

1. PROTECT AND MAINTAIN ALL PROCESS PIPING THROUGHOUT CONSTRUCTION TO ENSURE CONTINUED OPERATION OF THE WWTP.
2. PROTECT AND MAINTAIN ELECTRICAL CONDUITS THROUGHOUT CONSTRUCTION TO ENSURE CONTINUED OPERATION OF THE WWTP.
3. PROTECT AND MAINTAIN ALL PROCESS PIPING THROUGHOUT CONSTRUCTION TO ENSURE CONTINUED OPERATION OF THE WWTP.
4. REMOVE SIDING AND GIRTS BETWEEN SOLIDS HANDLING BUILDING AND WWTP. DO NOT INSTALL NEW SIDING BETWEEN TWO BUILDINGS. LEAVE NEW END WALL MAIN STRUCTURAL STEEL AND NEW HORIZONTAL GIRTS EXPOSED.
5. REMOVE AND DISPOSE OF EXISTING WASTE OIL BURNER.
6. REMOVE AND DISPOSE OF EXISTING AIR TANK.

REV	DATE	BY	DESCRIPTION

SCALE GRAPHIC
DESIGNED JLD
DRAWN GDM
CHECKED JLD
DATE OCT 2016

Haines Borough, Alaska

HAINES BOROUGH
2016 WASTEWATER TREATMENT PLANT UPGRADE

STATE OF ALASKA 49TH JAMES L. DORN CE 5323 10/13/16 REGISTERED PROFESSIONAL ENGINEER

Carson Dorn Inc.
712 WEST 12TH STREET
JUNEAU, ALASKA 99801
(907) 586-4447

PHOTOS

DRAWING P-6

SHEET No. 13 of 29

E:\GDM\2CAD\SE_AK\HAINES\2016 WASTEWATER TREATMENT PLANT BUILDING UPGRADE\2016 HAINES WASTEWATER UPDATES P1-8.DWG 10/13/2016 3:31:15 PM AST

P-3.5

P-4.1

P-4.2

NOTES

1. REMOVE AND DISPOSE OF EXISTING WASTE OIL BURNER.
2. PROTECT AND MAINTAIN ELECTRICAL CONDUITS THROUGHOUT CONSTRUCTION TO ENSURE CONTINUED OPERATION OF THE WWTP.
3. REMOVE SIDING AND GIRTS BETWEEN SOLIDS HANDLING BUILDING AND WWTP. DO NOT INSTALL NEW SIDING BETWEEN TWO BUILDINGS. LEAVE NEW END WALL MAIN STRUCTURAL STEEL AND NEW HORIZONTAL GIRTS EXPOSED.
4. PROTECT AND MAINTAIN EXISTING CLARIFIER THROUGHOUT CONSTRUCTION TO ENSURE CONTINUED OPERATION OF THE WWTP.
5. PROVIDE TEMPORARY SUPPORT AND PROTECT AND MAINTAIN EXISTING LIGHTING THROUGHOUT CONSTRUCTION.
6. PROTECT AND MAINTAIN EXISTING POLYMER MIXING AND FEED SYSTEM THROUGHOUT CONSTRUCTION TO ENSURE CONTINUED OPERATION OF THE WWTP.
7. PROTECT AND MAINTAIN EXISTING SLUDGE FEED SYSTEM THROUGHOUT CONSTRUCTION TO ENSURE CONTINUED OPERATION OF THE WWTP.

REV	DATE	BY	DESCRIPTION

SCALE GRAPHIC
DESIGNED JLD
DRAWN GDM
CHECKED JLD
DATE OCT 2016

Haines Borough, Alaska

HAINES BOROUGH
2016 WASTEWATER TREATMENT PLANT UPGRADE

STATE OF ALASKA 49TH JAMES L. DORN CE 5391 10/13/16 REGISTERED PROFESSIONAL ENGINEER

Carson Dorn Inc.
712 WEST 12TH STREET
JUNEAU, ALASKA 99801
(907) 586-4447

PHOTOS

DRAWING P-7

SHEET No. 14 of 29

ENGDM\2CAD\SE_AK\HAINES\2016 WASTEWATER TREATMENT PLANT BUILDING UPGRADE\2016 HAINES WASTEWATER UPDATES P1-8.DWG 10/13/2016 3:31:15 PM AST

P-4.3

P-4.4

P-4.5

NOTES

1. PROVIDE TEMPORARY SUPPORT AND PROTECT AND MAINTAIN EXISTING WATER WASHDOWN SYSTEM THROUGHOUT CONSTRUCTION. REMOVE WASHDOWN SYSTEM AFTER CONSTRUCTION AND REPLACE WITH NEW PVC SYSTEM.
2. REMOVE AND DISPOSE OF EXISTING WATER REDUCED PRESSURE BACKFLOW PREVENTION DEVICE AND REPLACE WITH NEW REDUCED PRESSURE BACK FLOW PREVENTION DEVICE.
3. REMOVE AND DISPOSE OF EXISTING WATER PUMPS THROUGHOUT CONSTRUCTION.

REV	DATE	BY	DESCRIPTION

SCALE GRAPHIC
DESIGNED JLD
DRAWN GDM
CHECKED JLD
DATE OCT 2016

Haines Borough, Alaska

HAINES BOROUGH

2016 WASTEWATER TREATMENT PLANT UPGRADE

STATE OF ALASKA 49TH JAMES L. DORN CE 5321 10/13/16 REGISTERED PROFESSIONAL ENGINEER

Carson Dorn Inc.
712 WEST 12TH STREET
JUNEAU, ALASKA 99801
(907) 586-4447

PHOTOS

DRAWING P-8

SHEET No. 15 of 29

ENGDM\2CAD\SE_AK\HAINES\2016 WASTEWATER TREATMENT PLANT BUILDING UPGRADE\2016 HAINES WASTEWATER UPDATES P1-8.DWG 10/13/2016 3:31:15 PM AST

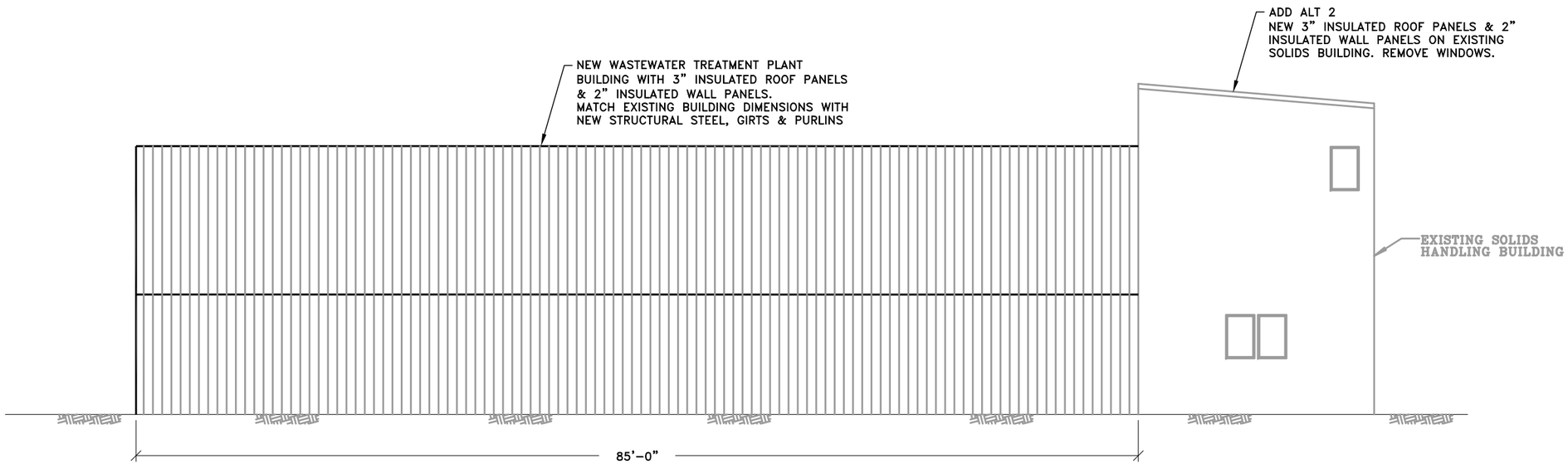

WEST ELEVATION

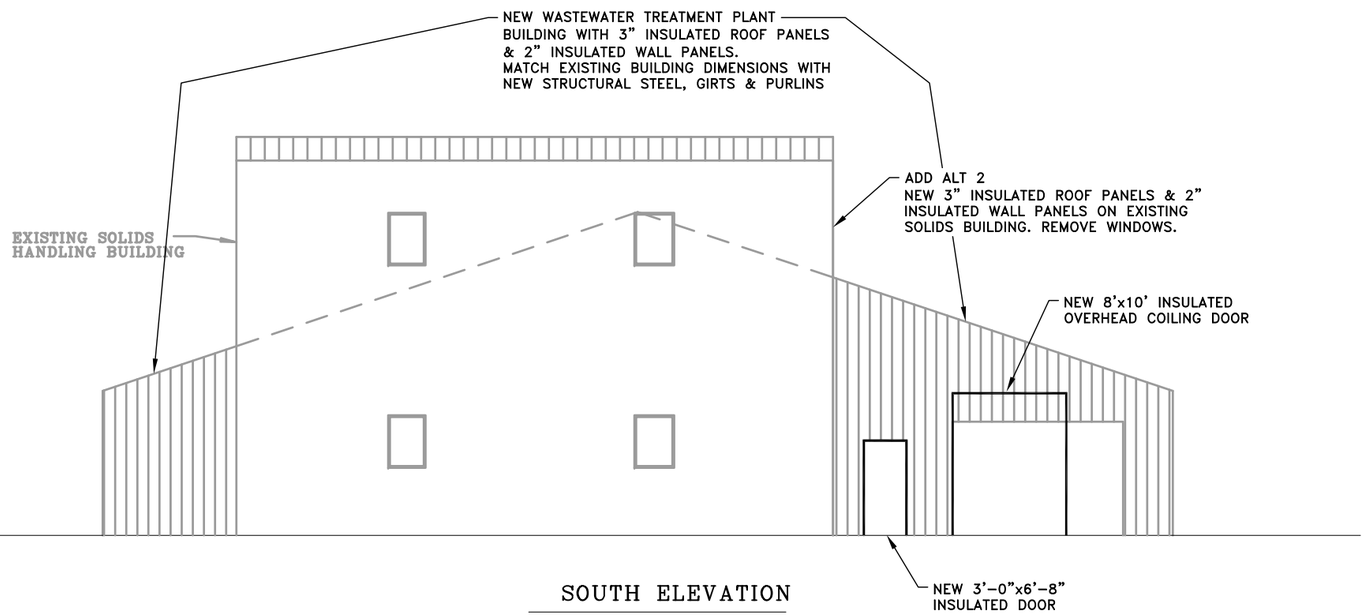

SOUTH ELEVATION

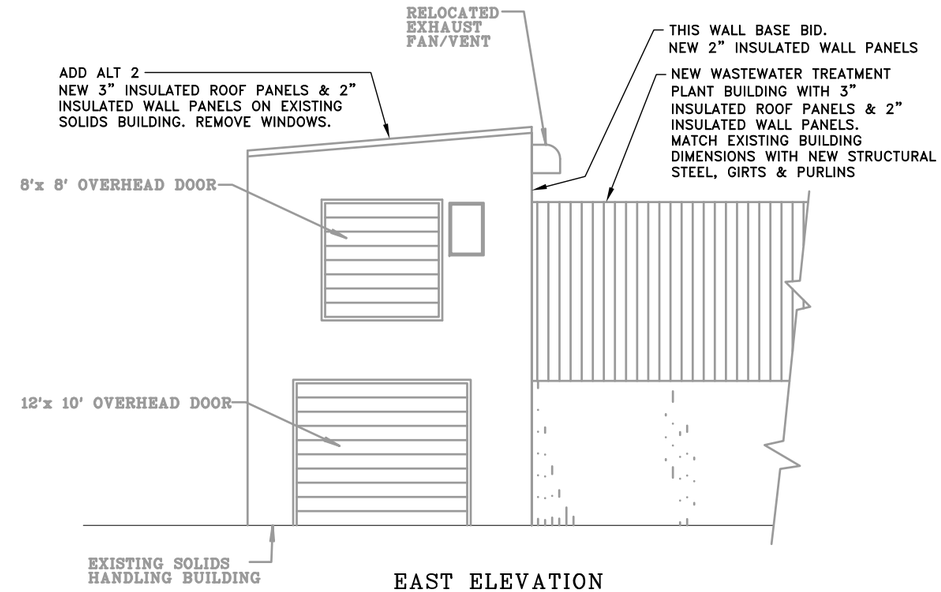

EAST ELEVATION

1 0 5 10 15 FEET
(3/16" = 1'-0" UNLESS DRAWING IS REDUCED)

REV	DATE	BY	DESCRIPTION

SCALE GRAPHIC
DESIGNED JLD
DRAWN GDM
CHECKED JLD
DATE OCT 2016

Haines Borough, Alaska

HAINES BOROUGH

2016 WASTEWATER TREATMENT PLANT UPGRADE

STATE OF ALASKA 49TH JAMES L. DORN CE 5321 10/13/16 REGISTERED PROFESSIONAL ENGINEER

Carson Dorn Inc.
712 WEST 12TH STREET
JUNEAU, ALASKA 99801
(907) 586-4447

NEW WASTEWATER TREATMENT PLANT BUILDING

DRAWING A-1

SHEET No. 16 of 29

10/13/2016 3:31:15 PM AST
EX:\GDM\2CAD\SE_AK\HAINES\2016 WASTEWATER TREATMENT PLANT BUILDING UPGRADE\2016 HAINES WASTEWATER UPDATES A1.DWG

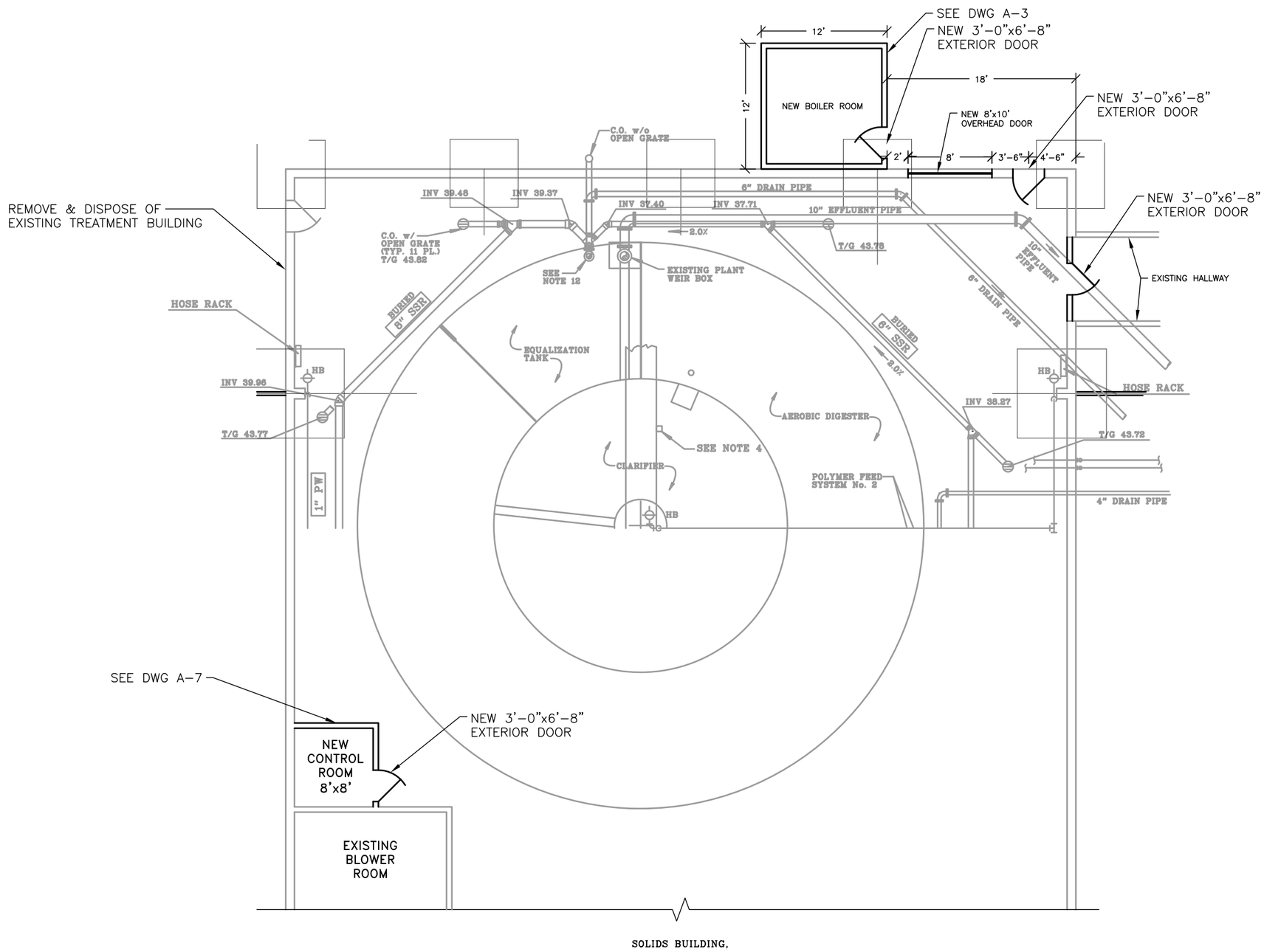

NOTES:

1. PROTECT AND MAINTAIN ALL EXISTING EQUIPMENT, PLANT SHALL BE KEPT FULLY OPERATIONAL AT ALL TIMES.
2. PROVIDE TEMPORARY SUPPORT FOR ELECTRICAL AND PIPING SUPPORTED FROM WALL AND ROOF. REATTACH TO NEW WALLS AND ROOF.

NORTH

1 0 5 10 15 FEET

(3/16" = 1'-0" UNLESS DRAWING IS REDUCED)

REV	DATE	BY	DESCRIPTION

SCALE GRAPHIC
DESIGNED JLD
DRAWN GDM
CHECKED JLD
DATE OCT 2016

Haines Borough, Alaska

HAINES BOROUGH

2016 WASTEWATER TREATMENT PLANT UPGRADE

STATE OF ALASKA 49TH JAMES L. DORN CE 5323 10/13/16 REGISTERED PROFESSIONAL ENGINEER

Carson Dorn Inc.
712 WEST 12TH STREET
JUNEAU, ALASKA 99801
(907) 586-4447

BOILER ROOM AND CONTROL ROOM PLAN

DRAWING A-2

SHEET No. 17 of 29

E:\GDM\2CAD\SE_AK\HAINES\2016 WASTEWATER TREATMENT PLANT BUILDING UPGRADE\2016 HAINES WASTEWATER UPDATES A2.DWG 10/13/2016 3:31:15 PM AST

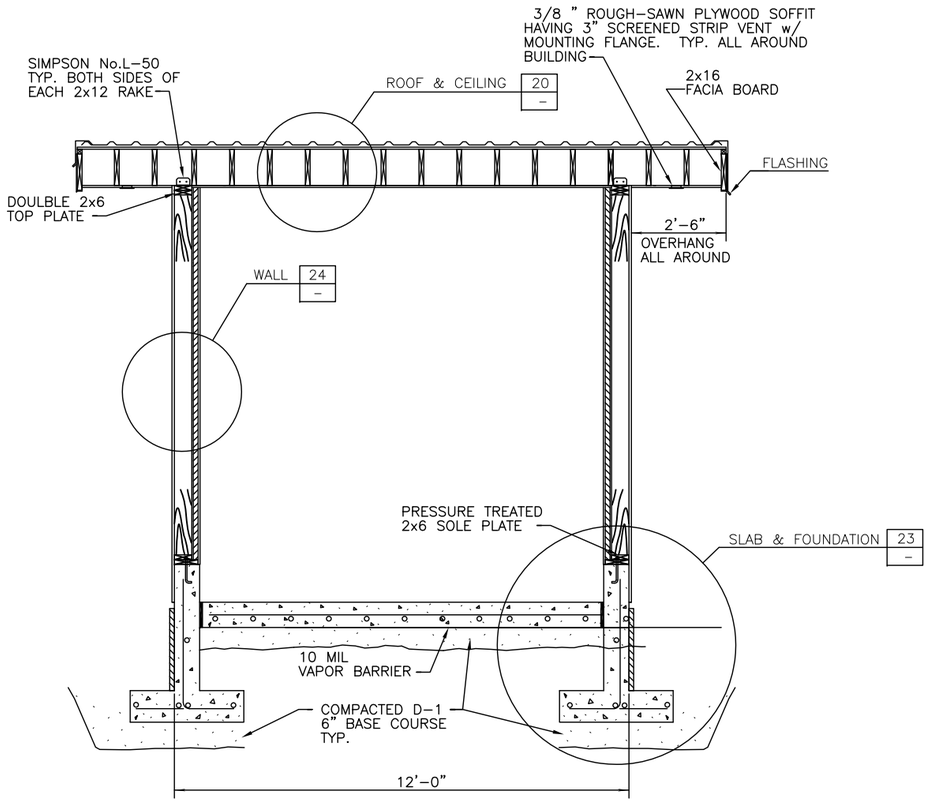

BUILDING SECTION

1 0 4 8 FEET

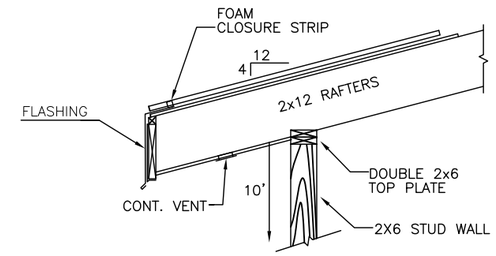

EAVE 22

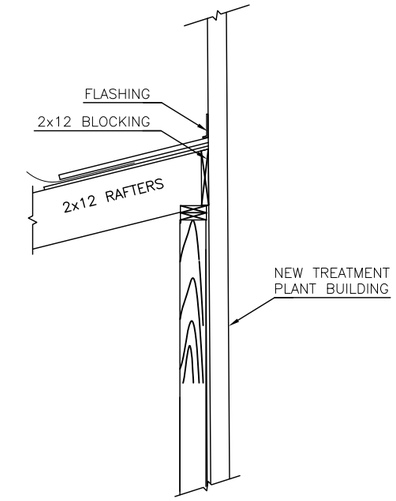

PEAK 21

1 0 1 2 3 FEET

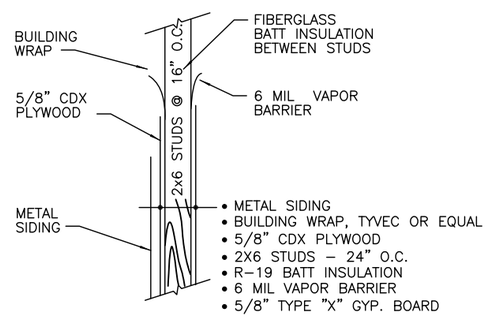

WALL 24

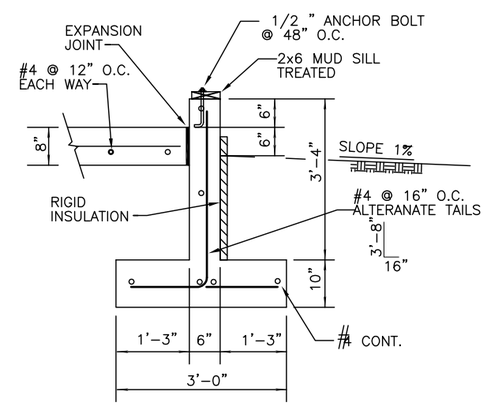

SLAB & FOUNDATION 23

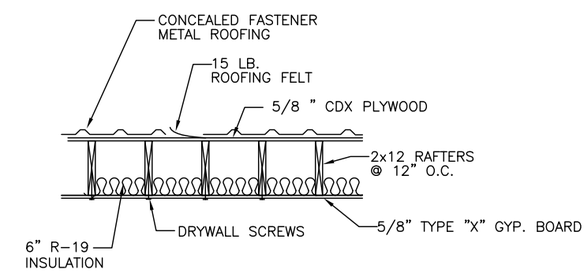

ROOF & CEILING 20

1 0 1 2 3 FEET

REV	DATE	BY	DESCRIPTION

SCALE GRAPHIC
DESIGNED JLD
DRAWN GDM
CHECKED JLD
DATE OCT 2016

Haines Borough, Alaska

HAINES BOROUGH
2016 WASTEWATER TREATMENT PLANT UPGRADE

STATE OF ALASKA 49TH JAMES L. DORN CE 5323 10/13/16 REGISTERED PROFESSIONAL ENGINEER

Carson Dorn Inc.
712 WEST 12TH STREET
JUNEAU, ALASKA 99801
(907) 586-4447

NEW BOILER ROOM STRUCTURAL SECTIONS, & DETAILS

DRAWING A-3
SHEET No. 18 of 29

E:\GDM\2CAD\SE_AK\HAINES\2016 WASTEWATER TREATMENT PLANT BUILDING UPGRADE\2016 HAINES WASTEWATER UPDATES A3.DWG 6/03/2016 10:43:15 PM AST

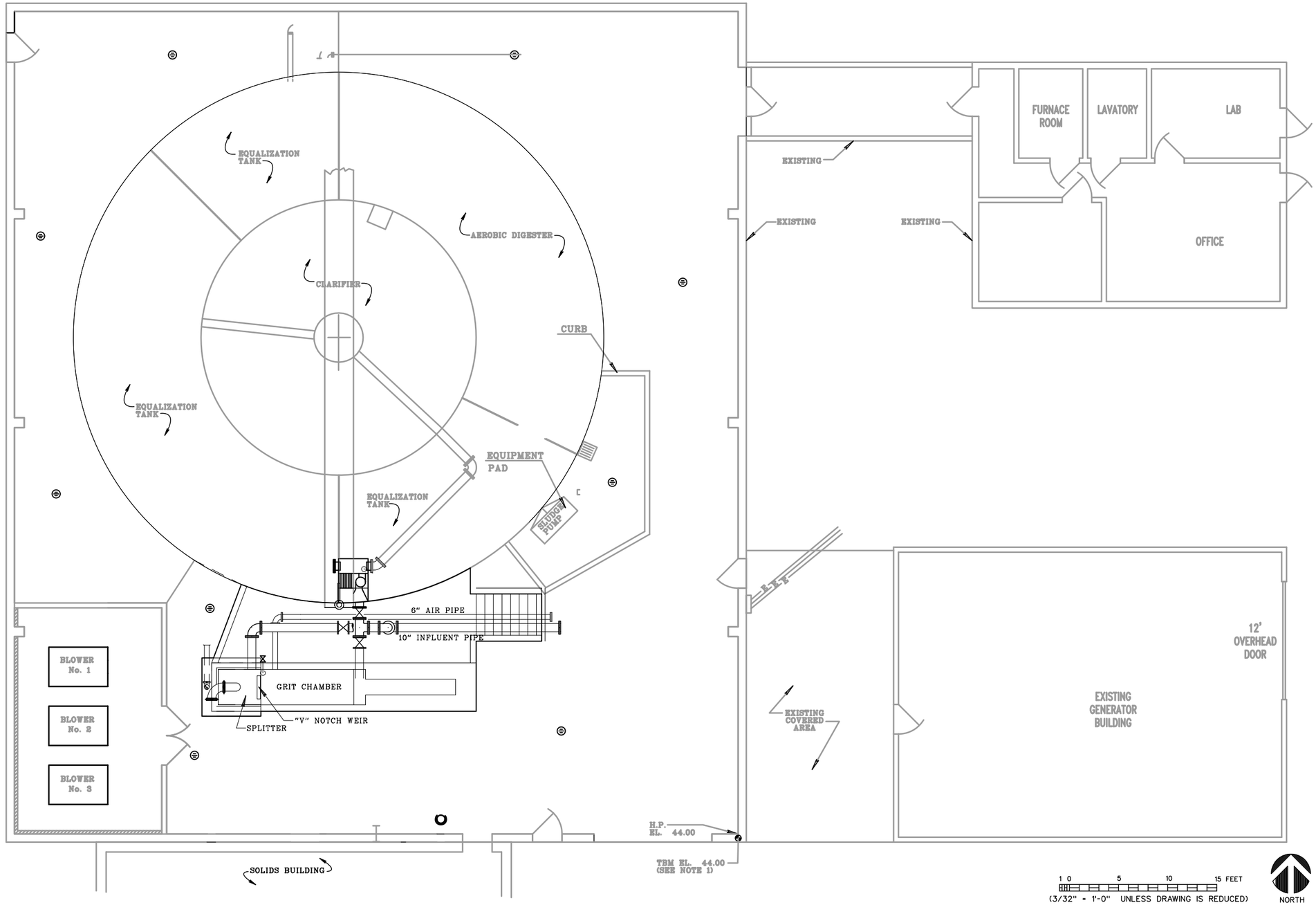

REV	DATE	BY	DESCRIPTION

SCALE GRAPHIC
DESIGNED JLD
DRAWN GDM
CHECKED JLD
DATE OCT 2016

Haines Borough, Alaska

HAINES BOROUGH

2016 WASTEWATER TREATMENT PLANT UPGRADE

STATE OF ALASKA 49TH JAMES L. DORN CE 5323 10/13/16 REGISTERED PROFESSIONAL ENGINEER

Carson Dorn Inc.
712 WEST 12TH STREET
JUNEAU, ALASKA 99801
(907) 586-4447

EXISTING TREATMENT BUILDING PLAN

DRAWING A-4

SHEET No. 19 of 29

ENGDM\2CAD\SE_AK\HAINES\2016 WASTEWATER TREATMENT PLANT BUILDING UPGRADE\2016 HAINES WASTEWATER UPDATES A4.DWG 10/13/2016 3:31:15 PM AST

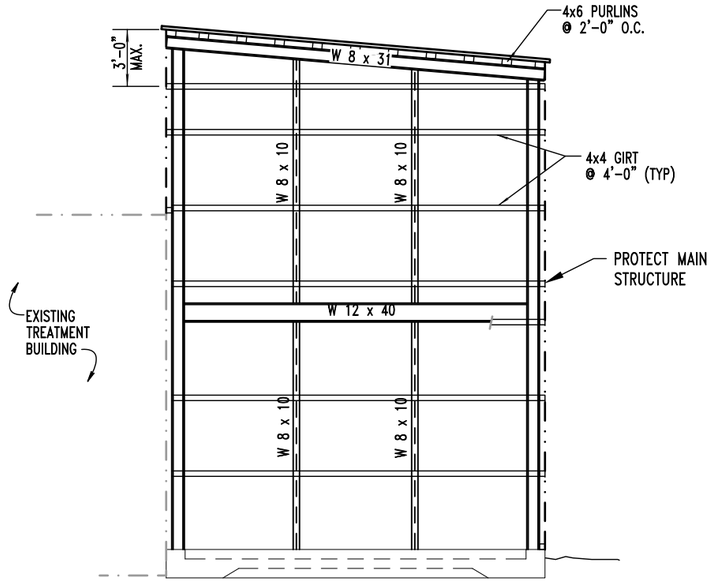

WEST ELEVATION

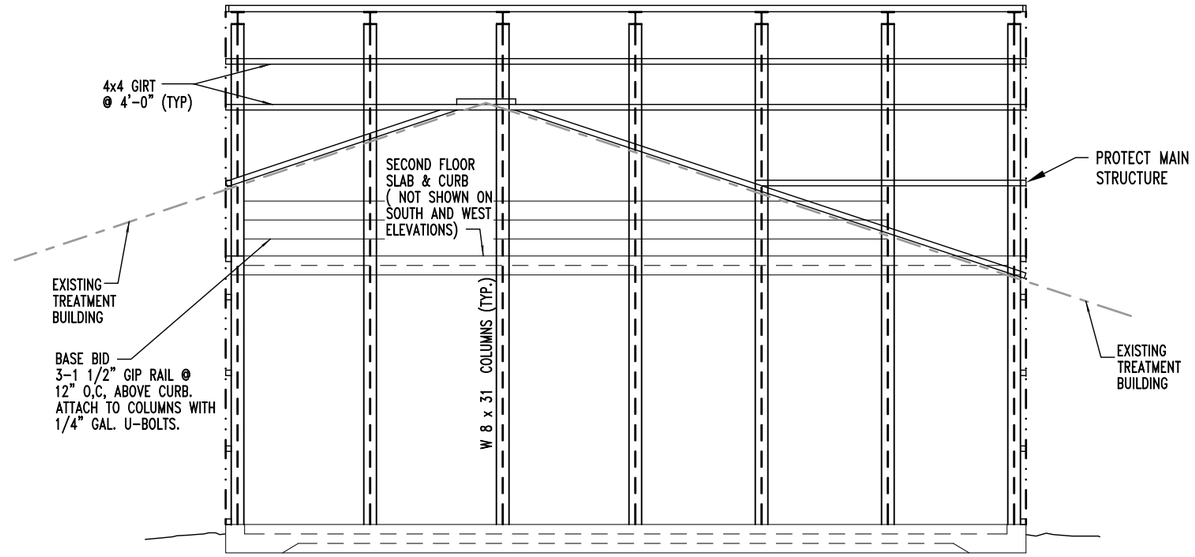

NORTH ELEVATION

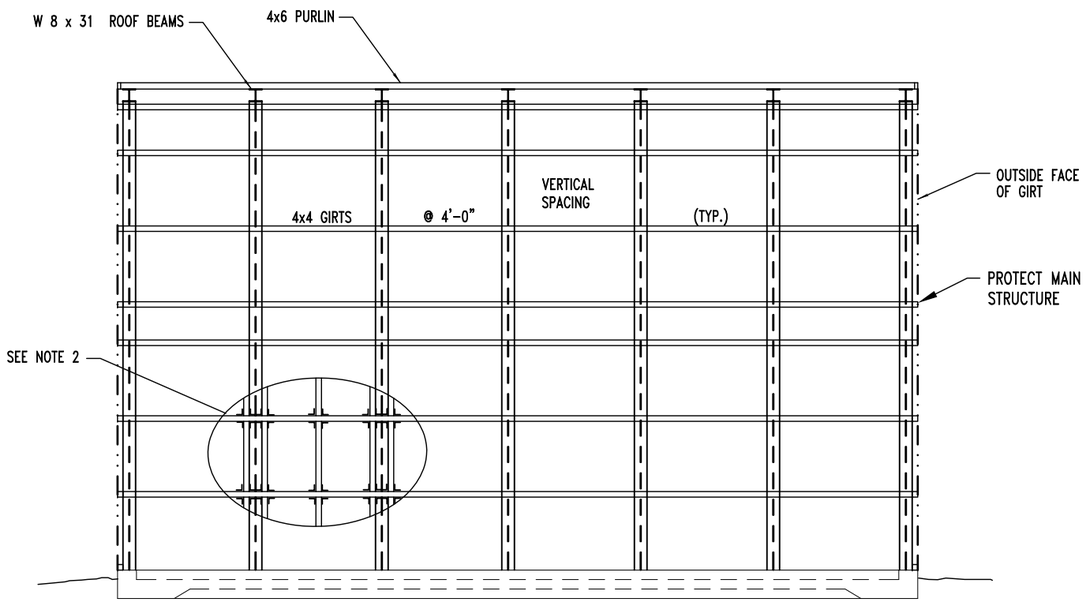

SOUTH ELEVATION

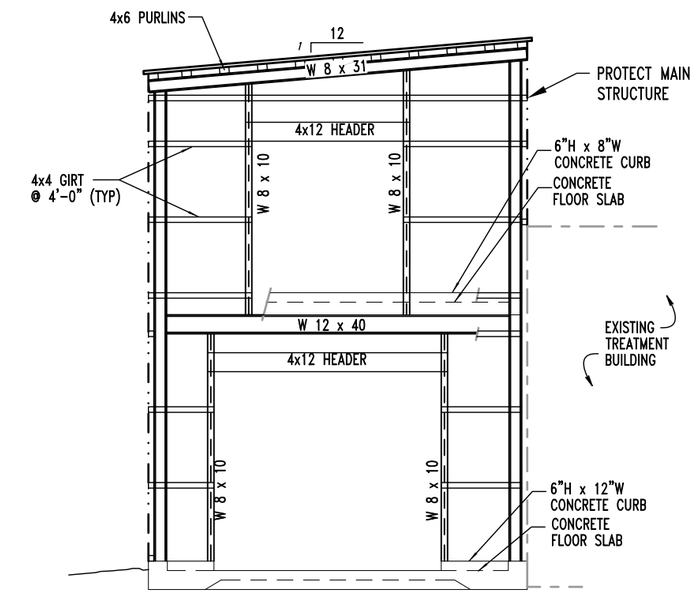

EAST ELEVATION

NOTES:

1. ALL WOODEN TIMBERS TO BE PRESSURE TREATED.

1 0 5 10 FEET
(1/8" = 1'-0" UNLESS DRAWING IS REDUCED)

REV	DATE	BY	DESCRIPTION

SCALE GRAPHIC
DESIGNED JLD
DRAWN GDM
CHECKED JLD
DATE OCT 2016

Haines Borough, Alaska

HAINES BOROUGH

2016 WASTEWATER TREATMENT PLANT UPGRADE

STATE OF ALASKA 49TH JAMES L. DORN CE 5321 10/13/16 REGISTERED PROFESSIONAL ENGINEER

Carson Dorn Inc.
712 WEST 12TH STREET
JUNEAU, ALASKA 99801
(907) 586-4447

EXISTING SOLIDS BUILDING
FRAMING ELEVATIONS
FOR INFORMATION

DRAWING
A-5

SHEET No.
20 of 29

10/13/2016 3:31:15 PM AST
EX:\GDM\2CAD\SE_AK\HAINES\2016 WASTEWATER TREATMENT PLANT UPGRADE\2016 HAINES WASTEWATER UPDATES A5.DWG

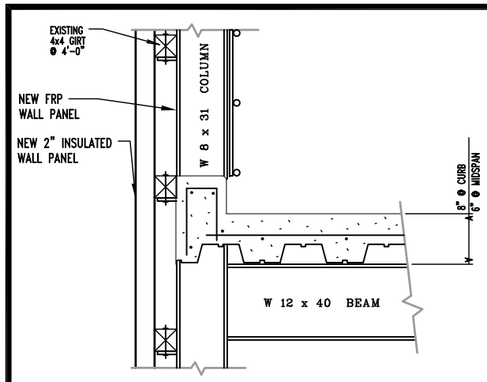

DECK AND SIDING AT SECOND FLOOR F

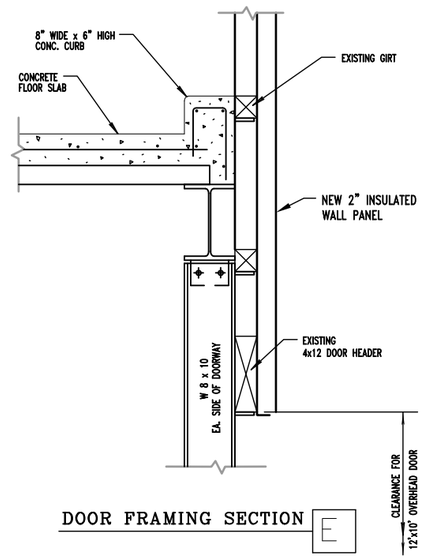

DOOR FRAMING SECTION E

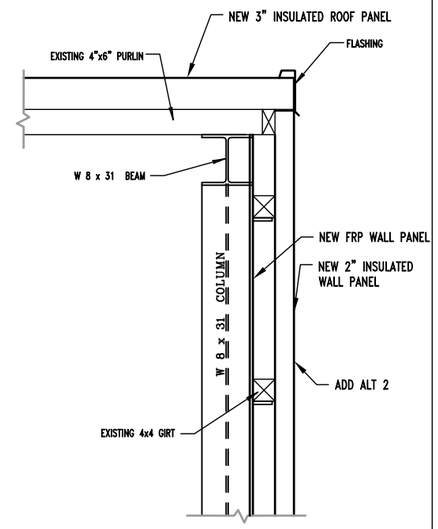

ROOF END SECTION C

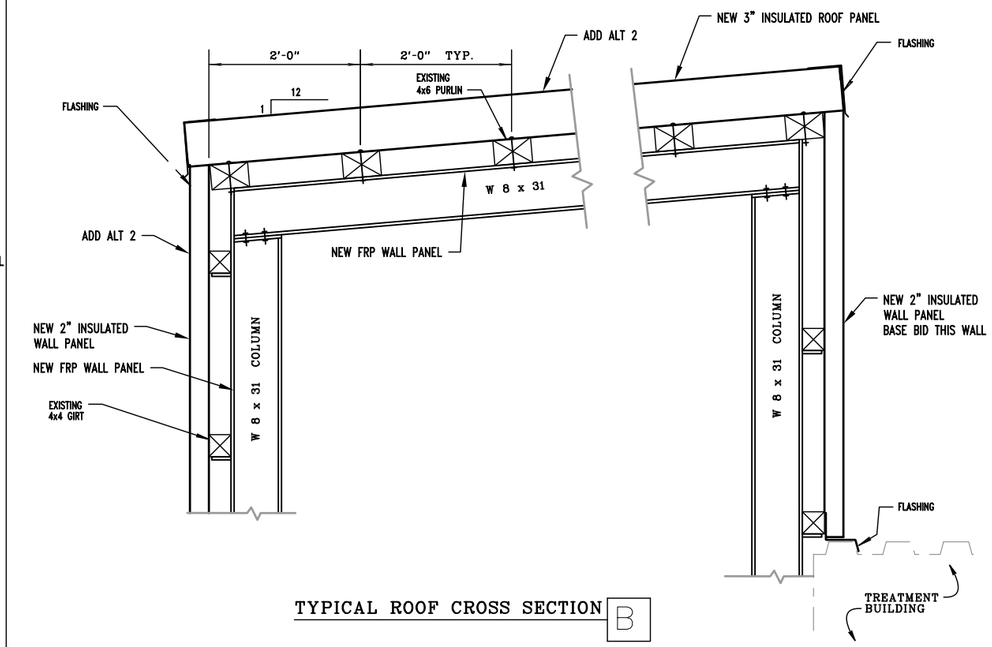

TYPICAL ROOF CROSS SECTION B

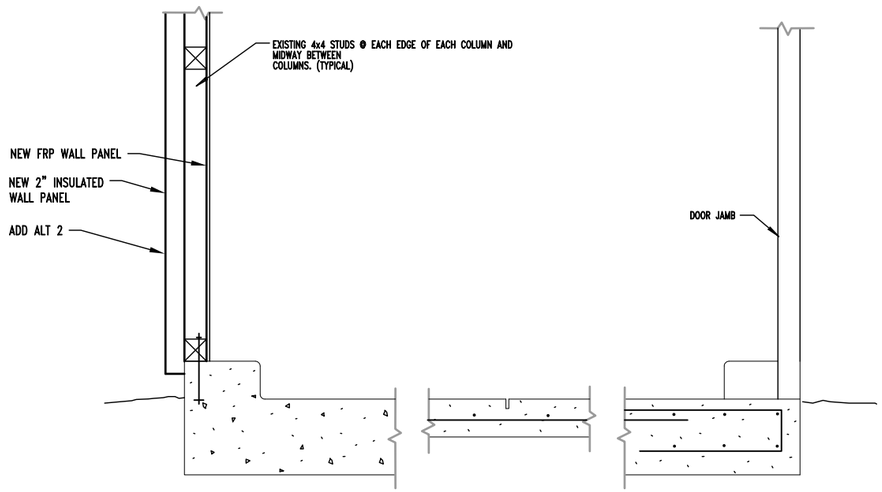

LONGITUDINAL SECTION D

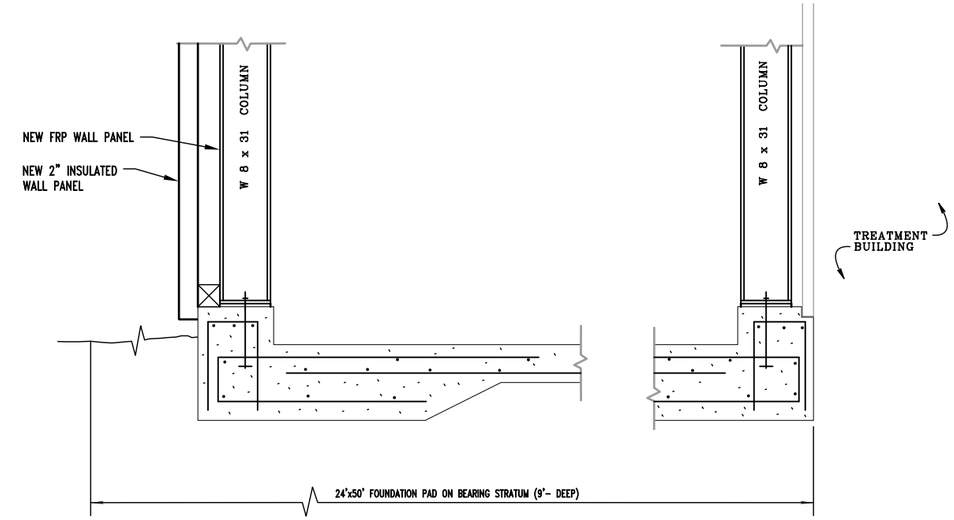

SLAB CROSS SECTION A

REV	DATE	BY	DESCRIPTION

SCALE GRAPHIC
DESIGNED JLD
DRAWN GDM
CHECKED JLD
DATE OCT 2016

Haines Borough, Alaska

HAINES BOROUGH

2016 WASTEWATER TREATMENT PLANT UPGRADE

STATE OF ALASKA 49TH JAMES L. DORN CE 5323 10/13/16 REGISTERED PROFESSIONAL ENGINEER

Carson Dorn Inc.
712 WEST 12TH STREET
JUNEAU, ALASKA 99801
(907) 586-4447

SOLIDS BUILDING
NEW ROOFING & SIDING

DRAWING A-6

SHEET No. 21 of 29

E:\GDM\2CAD\SE_AK\HAINES\2016 WASTEWATER TREATMENT P14\A\5/2014 DIR\15\15\SCRAMD\52016 HAINES WASTEWATER UPDATES A6.DWG 10/13/2016 3:31:15 PM AST

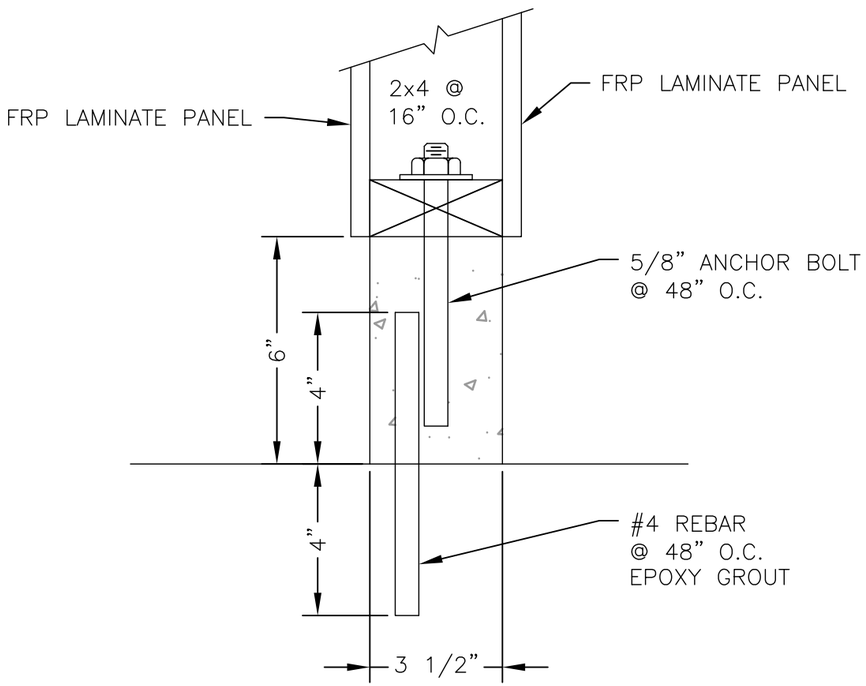

6" CONCRETE CURB DETAIL

1 0 4 8 FEET

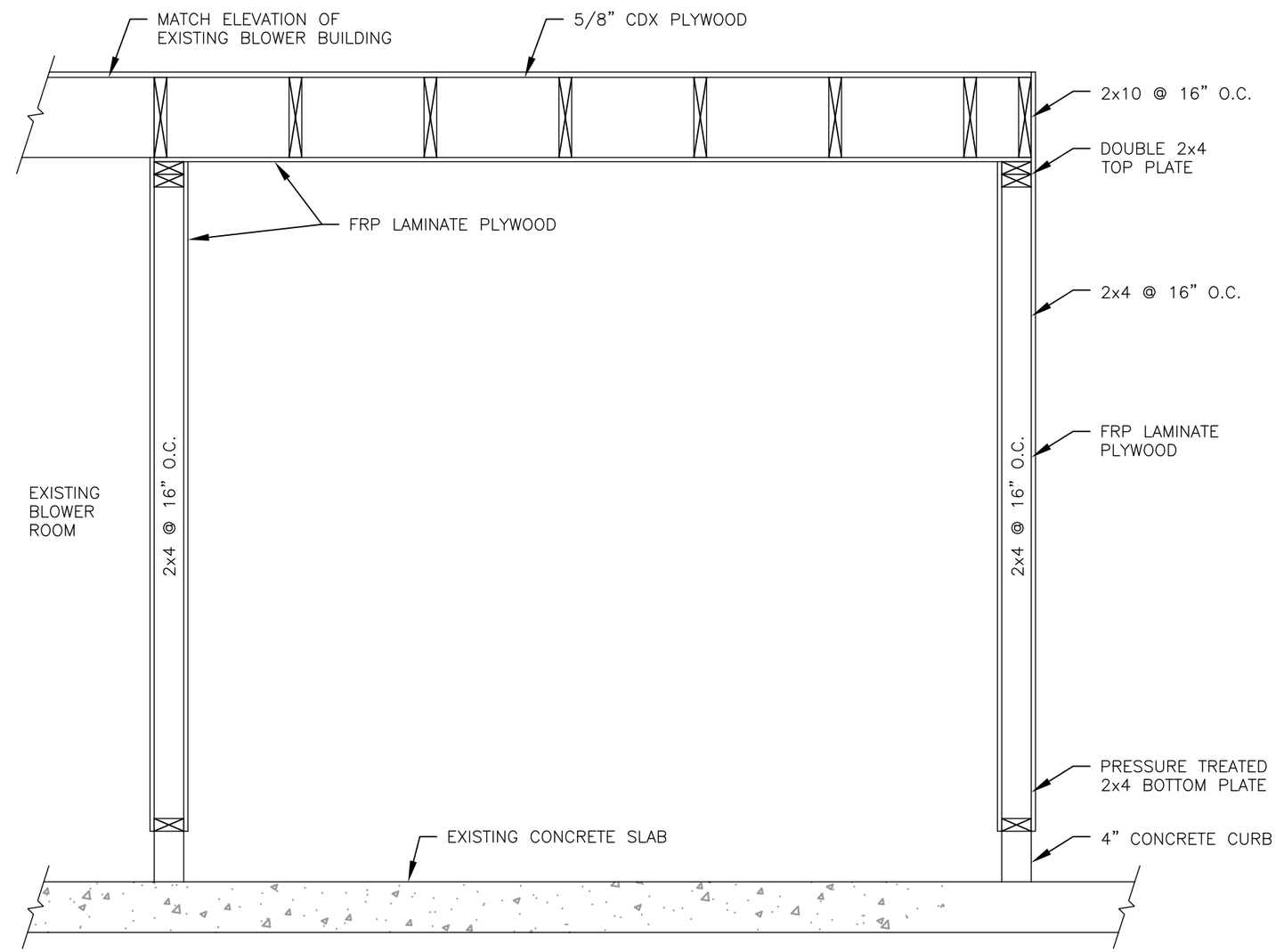

NEW CONTROL ROOM

1 0 4 8 FEET

REV	DATE	BY	DESCRIPTION

SCALE GRAPHIC
DESIGNED JLD
DRAWN GDM
CHECKED JLD
DATE OCT 2016

Haines Borough, Alaska

HAINES BOROUGH

2016 WASTEWATER TREATMENT PLANT UPGRADE

STATE OF ALASKA 49TH JAMES L. DORN CE 5323 10/13/16 REGISTERED PROFESSIONAL ENGINEER

Carson Dorn Inc.
712 WEST 12TH STREET
JUNEAU, ALASKA 99801
(907) 586-4447

NEW CONTROL ROOM STRUCTURAL SECTIONS, & DETAILS

DRAWING A-7

SHEET No. 22 of 29

E:\GDM\2CAD\SE_AK\HAINES\2016 WASTEWATER TREATMENT PLANT BUILDING UPGRADE\2016 HAINES WASTEWATER UPDATES A7.DWG 10/13/2016 3:31:15 PM AST

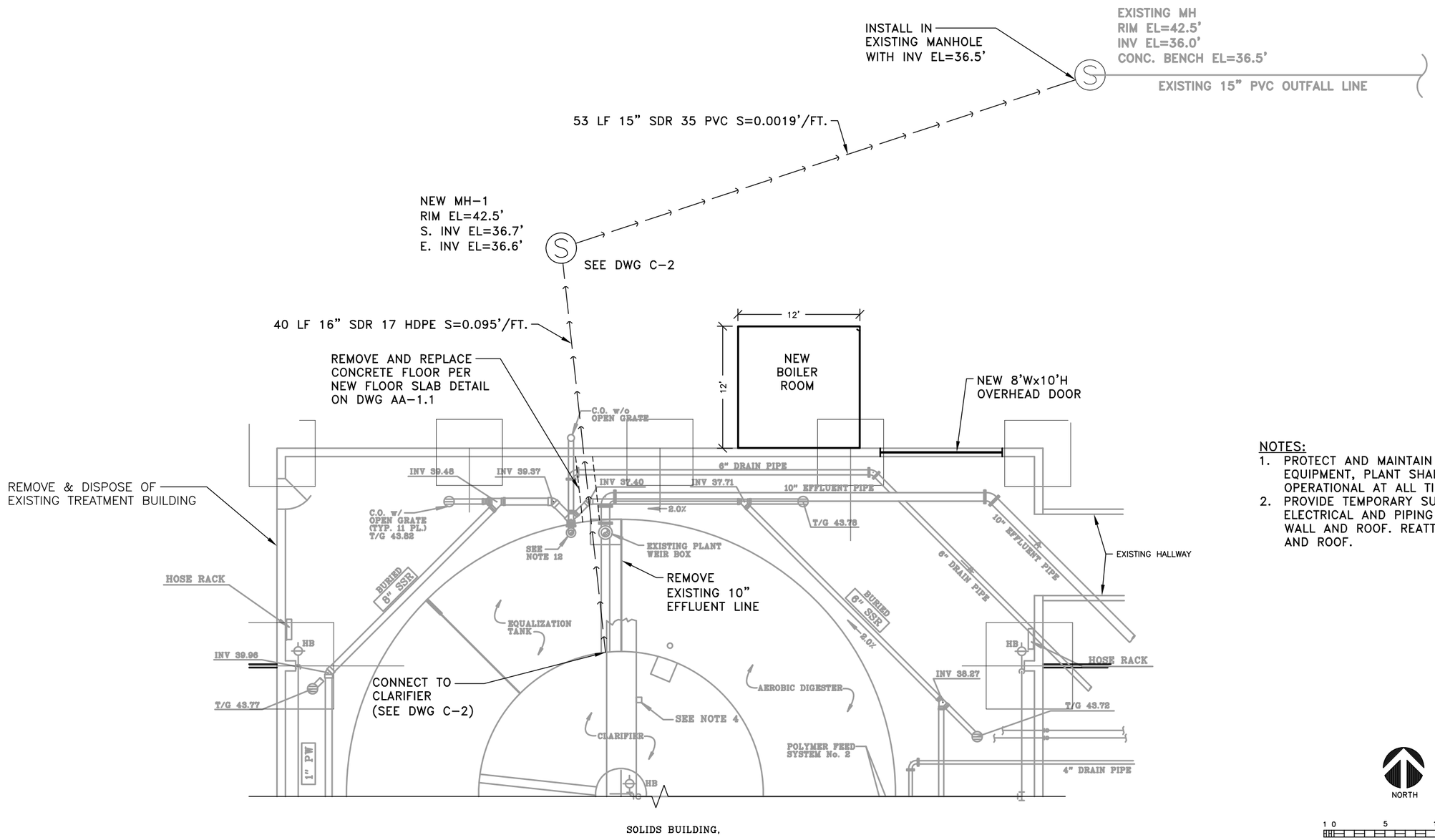

NOTES:

1. PROTECT AND MAINTAIN ALL EXISTING EQUIPMENT, PLANT SHALL BE KEPT FULLY OPERATIONAL AT ALL TIMES.
2. PROVIDE TEMPORARY SUPPORT FOR ELECTRICAL AND PIPING SUPPORTED FROM WALL AND ROOF. REATTACH TO NEW WALLS AND ROOF.

NORTH

1 0 5 10 15 FEET

(3/16" = 1'-0" UNLESS DRAWING IS REDUCED)

REV	DATE	BY	DESCRIPTION

SCALE GRAPHIC
DESIGNED JLD
DRAWN GDM
CHECKED JLD
DATE OCT 2016

Haines Borough, Alaska

HAINES BOROUGH

2016 WASTEWATER TREATMENT PLANT UPGRADE

STATE OF ALASKA 49TH JAMES L. DORN CE 5323 10/13/16 REGISTERED PROFESSIONAL ENGINEER

Carson Dorn Inc.
712 WEST 12TH STREET
JUNEAU, ALASKA 99801
(907) 586-4447

NEW EFFLUENT LINE

DRAWING C-1

SHEET No. 23 of 29

10/13/2016 3:31:15 PM AST

E:\GDM\2CAD\SE_AK\HAINES\2016 WASTEWATER TREATMENT PLANT BUILDING UPGRADE\2016 HAINES WASTEWATER UPDATES C1&2.DWG

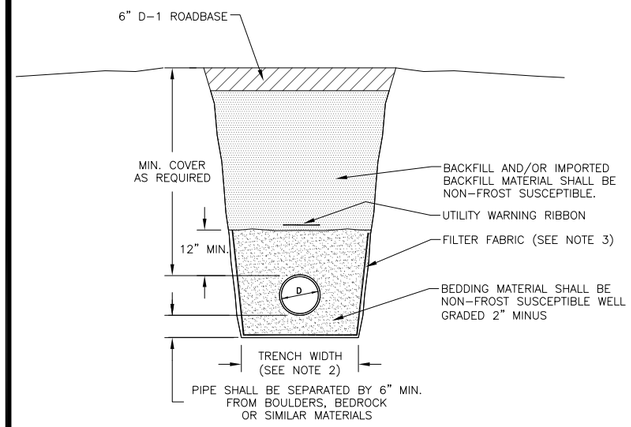

NOTES:
1. TRENCHES SHALL BE WITHIN 20' OF PERPENDICULAR TO CENTER-LINE OF ROADWAY UNLESS APPROVED BY THE ENGINEER.
2. MINIMUM TRENCH WIDTH SHALL BE NOMINAL PIPE DIAMETER ("D") PLUS 2'.
3. FILTER FABRIC SHALL BE USED AS DIRECTED BY THE ENGINEER. ATTACH TO TRENCH SIDEWALL A MIN OF 12" ABOVE TOP OF PIPE.
4. BEDDING & BACKFILL SHALL BE COMPACTED TO 95% OF MAXIMUM PROCTOR DENSITY WITHIN THE RIGHT-OF-WAY AND THROUGHOUT THE DEPTH OF EACH LIFT. LIFT DEPTH SHALL BE 18" MAX AND APPROVED BY THE ENGINEER.
5. PAVEMENT SHALL BE SAWCUT PRIOR TO EXCAVATING. AFTER BACKFILLING TRENCH, PAVEMENT SHALL BE SAWCUT A SECOND TIME TO EXPOSE A MINIMUM OF 18" OF UNDISTURBED BASE MATERIAL. ENTIRE WIDTH OF EXPOSED ROADBASE SHALL BE COMPACTED TO 95% OF MAXIMUM PROCTOR DENSITY.
6. IF TRENCH IS NOT IMMEDIATELY BACKFILLED AND COMPACTED, REMOVAL OF MORE THAN 18" OF EXTRA ASPHALT AND FURTHER COMPACTION OF THE ROADBASE SHALL BE REQUIRED BY THE ENGINEER.
7. RESURFACE ASPHALT PAVED STREETS WITH 6" MIN. D-1, AND 6" MIN. CONCRETE.
8. RESURFACE CHIP SEALED STREETS WITH 6" MIN. D-1.
9. FOR STREETS WITH SUBBASES CONSISTING OF MATERIALS OTHER THAN D-1, RESURFACE STREET AS DIRECTED BY THE ENGINEER.

TRENCH DETAIL
STANDARD 125

N.T.S.

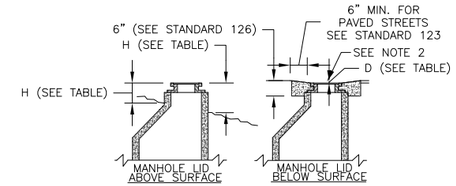

MANHOLE HEIGHTS/DEPTHS

LOCATION OF MANHOLE	HEIGHT (H)	LOCATION OF MANHOLE	DEPTH (D)
UNDEVELOPED & SWAMPY AREAS	12" TO 24"	PAVED STREETS (SEE NOTE 1)	3/8"
HIGHWAY R.O.W.'S OUTSIDE OF TRAFFIC AREAS	1" TO 6"	BACKYARDS, GRAVEL STREETS, AND TRAVELED ALLEY AREAS	8" MAX.

NOTES:
1. MANHOLE LID MUST CONFORM TO THE GRADE AND CROSS SLOPE OF THE STREET.
2. MEASUREMENT SHALL BE TAKEN FROM THE TOP OF THE EMBOSSED LETTERING AND LUGS IF HIGHER THAN FRAME.
3. FOR BACKYARDS, GRAVEL STREETS AND TRAVELED ALLEY AREAS, BACKFILL TO MATCH EXISTING GRADE.
4. SANITARY SEWER MAIN CLEANOUT ELEVATIONS SHALL CONFORM TO THIS STANDARD.

MANHOLE HEIGHTS
STANDARD 205

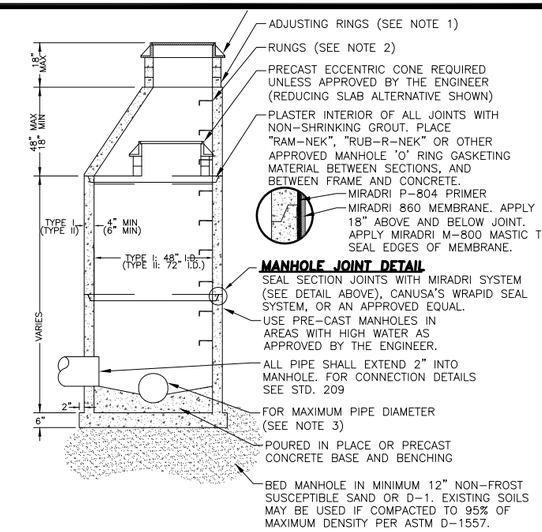

NOTES:
1. USE NO MORE THAN ONE 4" ADJUSTING RING ON NEW CONSTRUCTION ON UNPAVED ROADS, AND NO MORE THAN THREE 4" RINGS ON RECONSTRUCTIONS.
2. RUNGS TO BE PLACED 12" O.C. ON UNOBSTRUCTED SIDE OF MANHOLE. LAST RUNG SHALL BE 18" MAX FROM BOTTOM OF MANHOLE, AND TOP RUNG SHALL BE 6" MAXIMUM FROM TOP OF CONE. IF UNOBSTRUCTED SIDE NOT AVAILABLE, LAST RUNG SHALL BE PLACED 6" OVER SMALLEST PIPE. RUNGS SHALL BE LANE POLYETHYLENE 14" LADDER STEPS OR AN APPROVED EQUAL.
3. MAXIMUM PIPE DIAMETER SHALL BE 20" FOR A TYPE I MANHOLE. FOR LARGER PIPES, USE A TYPE II MANHOLE.
4. REFER TO A.S.T.M. C-478 FOR DESIGN REQUIREMENTS AND C-478-69 FOR MINIMUM STEEL FOR BARREL. FIRST BARREL SECTION SHALL BE IMBEDDED IN BASE. BLOCKOUTS SHALL BE FORMED.
5. IF MANHOLE IS WITHIN A ROADWAY, COMPACTION TESTS MUST BE TAKEN ON BACKFILL EVERY 3'. DENSITY SHALL BE 95% OF MAXIMUM PROCTOR DENSITY.
6. MANHOLE FRAMES MAY BE RAISED TO ACCOMMODATE PAVEMENT OVERLAYS PROVIDED THE DISTANCE FROM THE TOP OF THE FRAME TO THE FIRST RUNG IS LESS THAN 36".

SANITARY SEWER MANHOLES
TYPES I AND II
STANDARD 203

N.T.S.

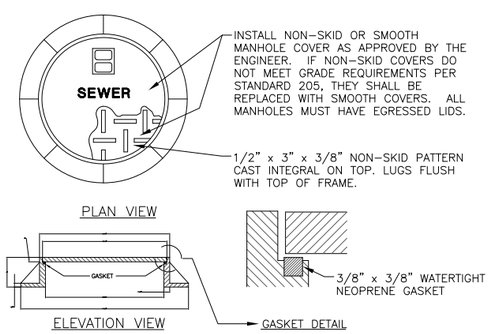

NOTES:
1. FRAME MUST BE MACHINED TO FIT WATERTIGHT NEOPRENE GASKET.
2. COVER SHALL BE WATER TIGHT WITH NO HOLES, SHALL HAVE THE WORD "SEWER" CAST IN AND SHALL BE PROVIDED WITH AN INTEGRAL POCKET LIFT HANDLE.
3. FRAME AND COVER DIMENSIONS SHALL BE IN ACCORDANCE WITH OLYMPIC CONSTRUCTION CASTINGS NO. MH30A, INLAND FOUNDRY NO. 743 WITH EGRESSED LID, OR AN APPROVED EQUAL.
4. FRAME AND GRATE SHALL BE DUCTILE IRON.
5. FRAME AND GRATE SHALL BE OF A TYPE THAT WILL NOT CREATE A HAZARD FOR BICYCLE TRAFFIC.
6. IF MAINLINE IS 20" OR GREATER, PROVIDE MANHOLE WITH 30" OPENING IN COVER & FRAME.

MANHOLE COVER AND FRAME DETAIL
STANDARD 206A

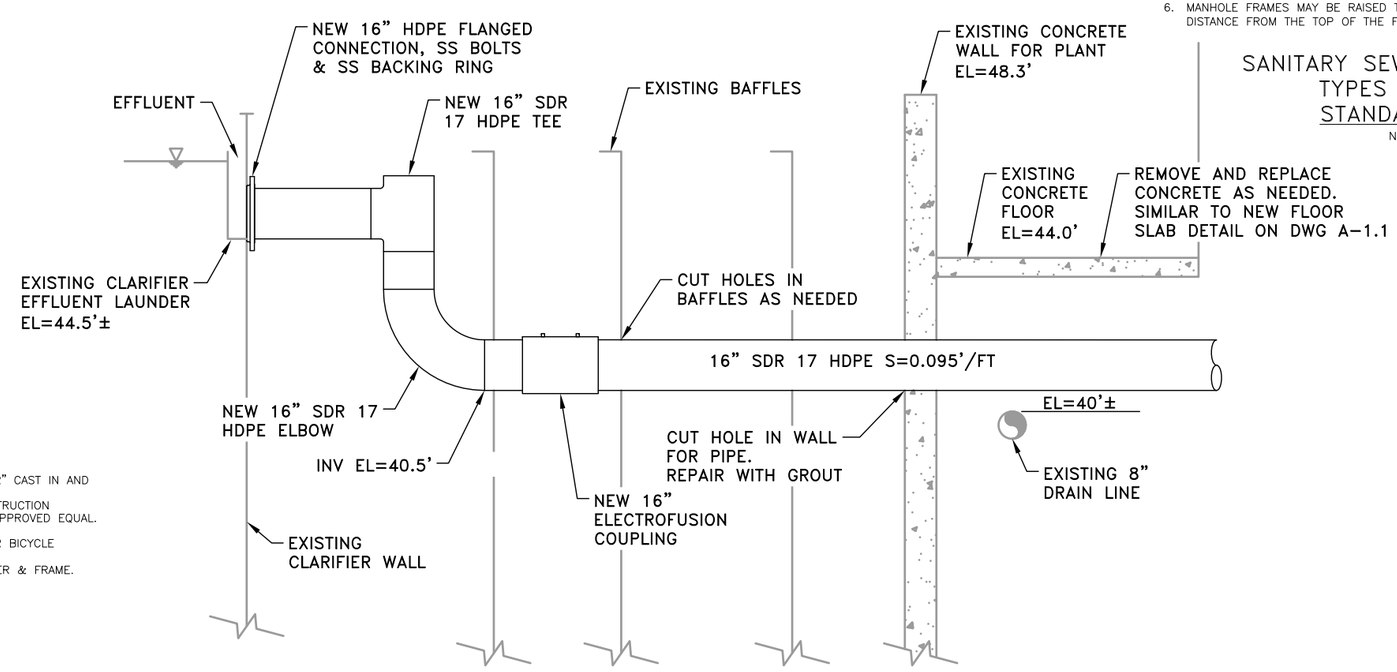

REV	DATE	BY	DESCRIPTION

SCALE GRAPHIC
DESIGNED JLD
DRAWN GDM
CHECKED JLD
DATE OCT 2016

Haines Borough, Alaska

HAINES BOROUGH
2016 WASTEWATER TREATMENT PLANT UPGRADE

STATE OF ALASKA 49TH JAMES L. DORN CE 5323 10/13/16 REGISTERED PROFESSIONAL ENGINEER

Carson Dorn Inc.
712 WEST 12TH STREET
JUNEAU, ALASKA 99801
(907) 586-4447

NEW EFFLUENT LINE DETAIL

DRAWING C-2

SHEET No. 24 of 29

E:\GDM\2CAD\SE_AK\HAINES\2016 WASTEWATER TREATMENT PLANT BUILDING UPGRADE\2016 HAINES WASTEWATER UPDATES C1&2.DWG 10/13/2016 3:31:15 PM AST

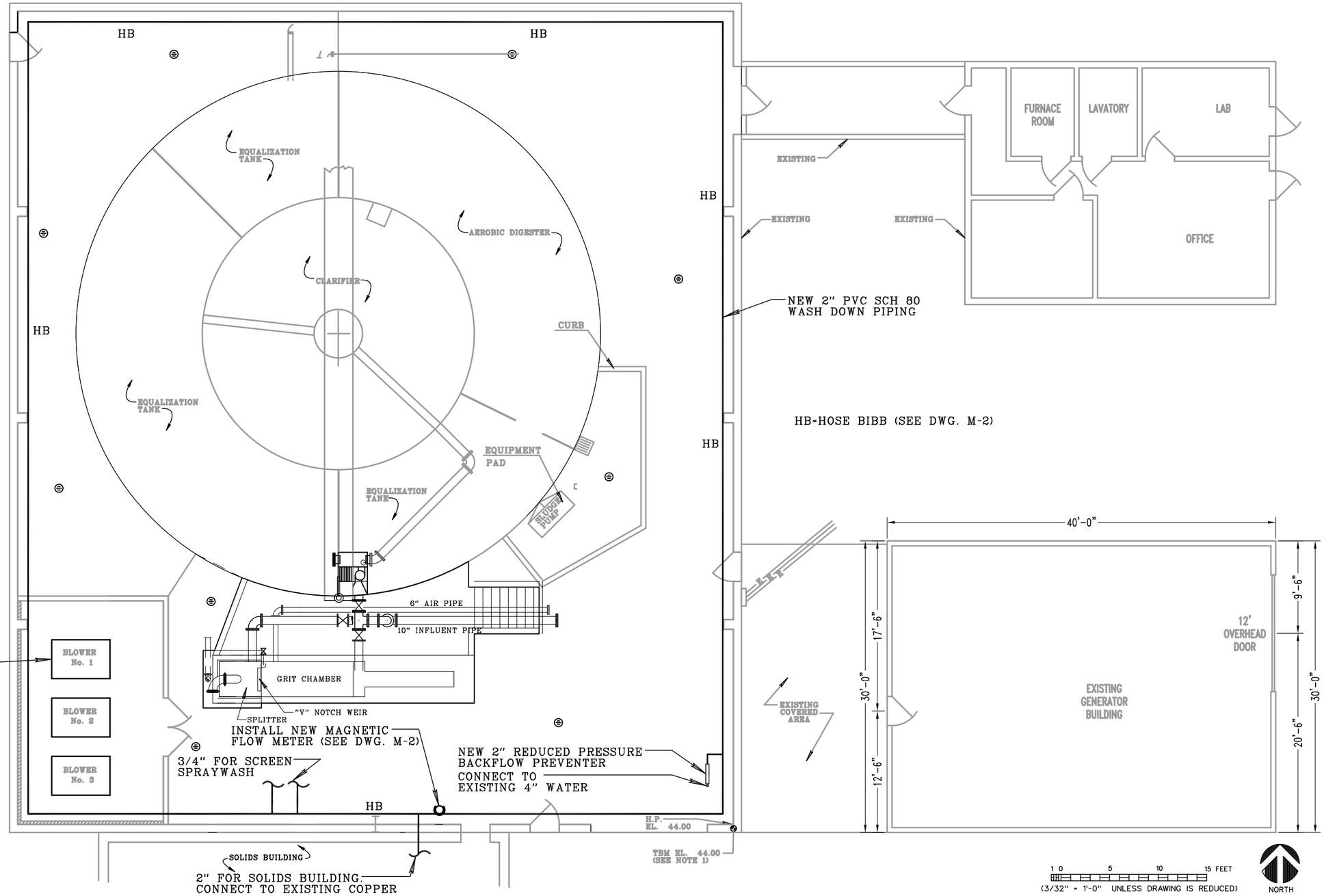

REV	DATE	BY	DESCRIPTION

SCALE GRAPHIC
DESIGNED JLD
DRAWN GDM
CHECKED JLD
DATE OCT 2016

Haines Borough, Alaska

HAINES BOROUGH

2016 WASTEWATER TREATMENT PLANT UPGRADE

STATE OF ALASKA 49TH JAMES L. DORN CE 5323 10/13/16 REGISTERED PROFESSIONAL ENGINEER

Carson Dorn Inc.
712 WEST 12TH STREET
JUNEAU, ALASKA 99801
(907) 586-4447

MAGNETIC FLOW METER & WASH DOWN PIPING

DRAWING M-1

SHEET No. 25 of 29

ENGDM\2CAD\SE_AK\HAINES\2016 WASTEWATER TREATMENT PLANT BUILDING UPGRADE\2016 HAINES WASTEWATER UPDATES M1.DWG 10/13/2016 3:31:15 PM AST

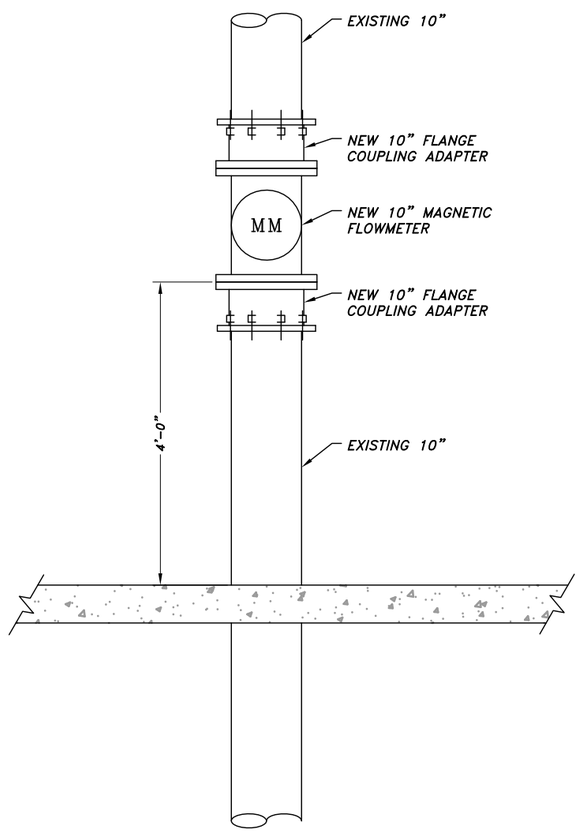

MAGNETIC FLOW METER DETAIL

NOTE:
MOUNT PIPE WITH HDG UNISTRUT

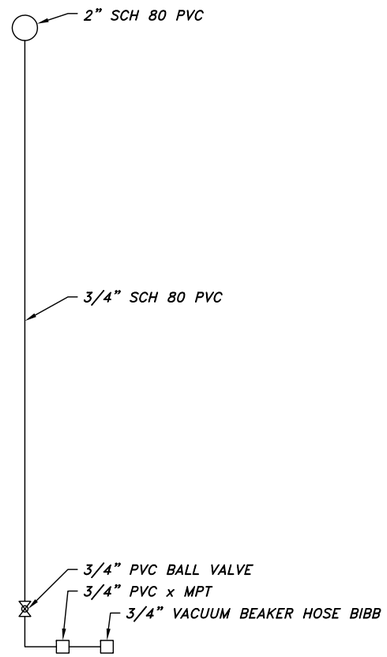

HOSE BIBB DETAIL

NOTE:
AIR VENT AT ALL HIGH POINTS

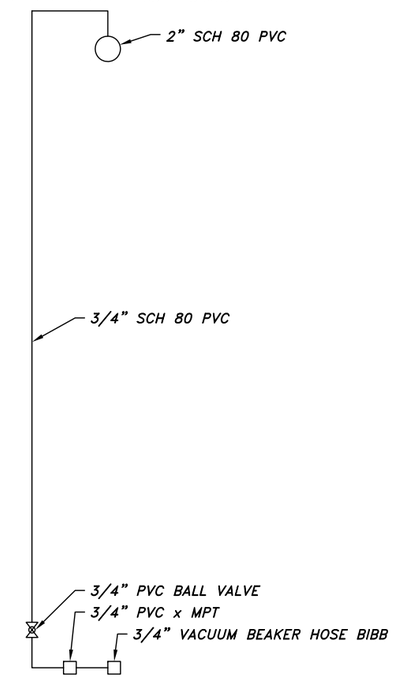

AIR VENT DETAIL

REV	DATE	BY	DESCRIPTION

SCALE GRAPHIC
DESIGNED JLD
DRAWN GDM
CHECKED JLD
DATE OCT 2016

Haines Borough, Alaska

HAINES BOROUGH
2016 WASTEWATER TREATMENT PLANT UPGRADE

STATE OF ALASKA 49TH JAMES L. DORN CE 5323 10/13/16 REGISTERED PROFESSIONAL ENGINEER

Carson Dorn Inc.
712 WEST 12TH STREET
JUNEAU, ALASKA 99801
(907) 586-4447

MAGNETIC FLOW METER & WASH DOWN PIPING DETAILS

DRAWING M-2

SHEET No. 26 of 29

ENGDM\2CAD\SE_AK\HAINES\2016 WASTEWATER TREATMENT PLANT BUILDING UPGRADE\2016 HAINES WASTEWATER UPDATES M2.DWG 6/03/2018 2:05:15 PM AST

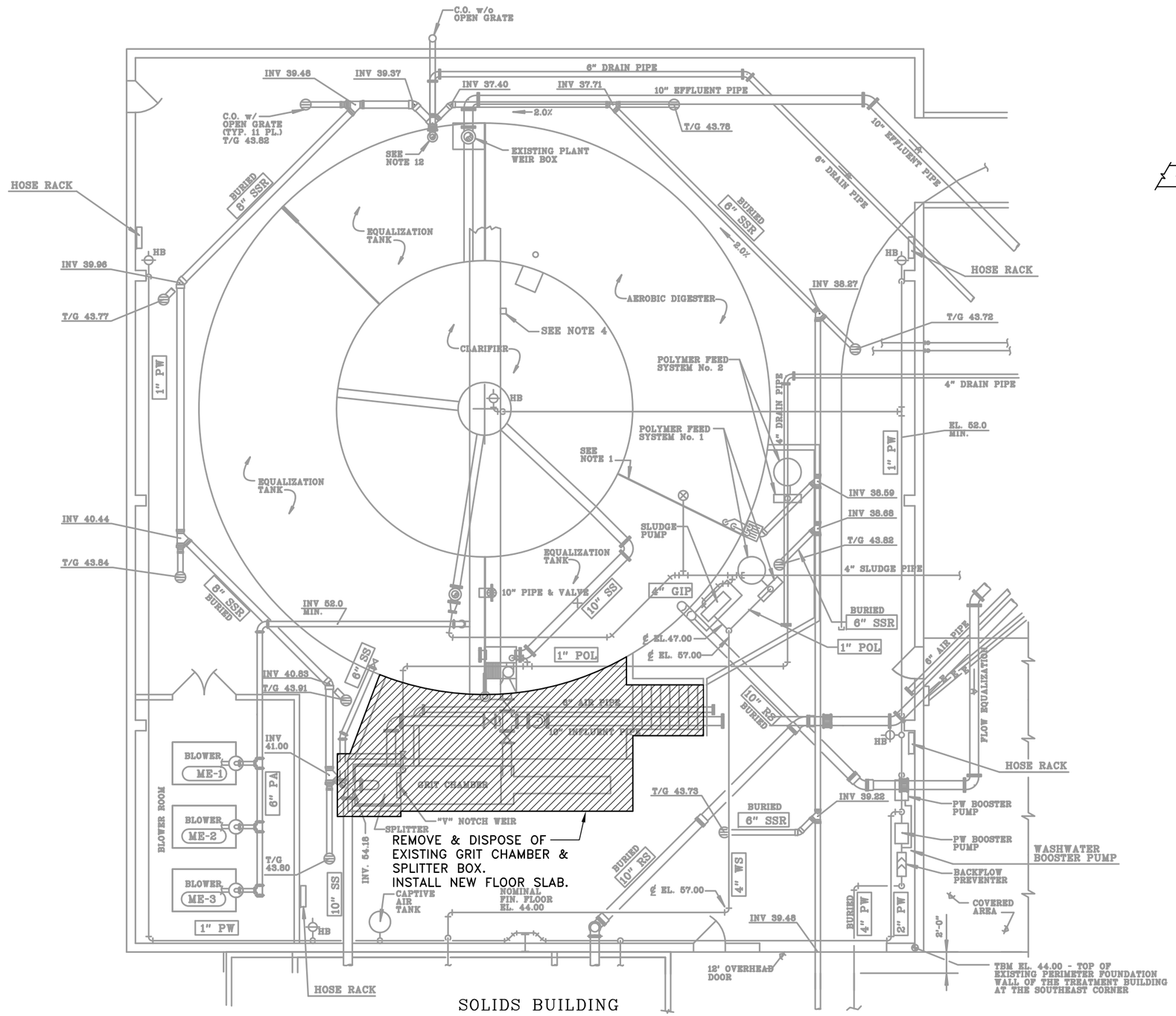

SOLIDS BUILDING

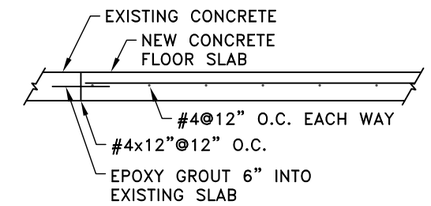

NEW FLOOR SLAB

NORTH

1 0 5 10 15 FEET
(3/16" = 1'-0" UNLESS DRAWING IS REDUCED)

REV	DATE	BY	DESCRIPTION

SCALE GRAPHIC
DESIGNED JLD
DRAWN GDM
CHECKED JLD
DATE OCT 2016

Haines Borough, Alaska

HAINES BOROUGH

2016 WASTEWATER TREATMENT PLANT UPGRADE

STATE OF ALASKA 49TH JAMES L. DORN CE 5323 10/13/16 REGISTERED PROFESSIONAL ENGINEER

Carson Dorn Inc.
712 WEST 12TH STREET
JUNEAU, ALASKA 99801
(907) 586-4447

AA-1 INFLUENT SCREEN EQUIPMENT & PIPING DEMOLITION

DRAWING AA-1.1

SHEET No. 27 of 29

E:\GDM\2CAD\SE_AK\HAINES\2016 WASTEWATER TREATMENT PLANT BUILDING UPGRADE\2016 HAINES WASTEWATER UPDATES AA1.1.DWG 10/13/2016 3:31:15 PM AST

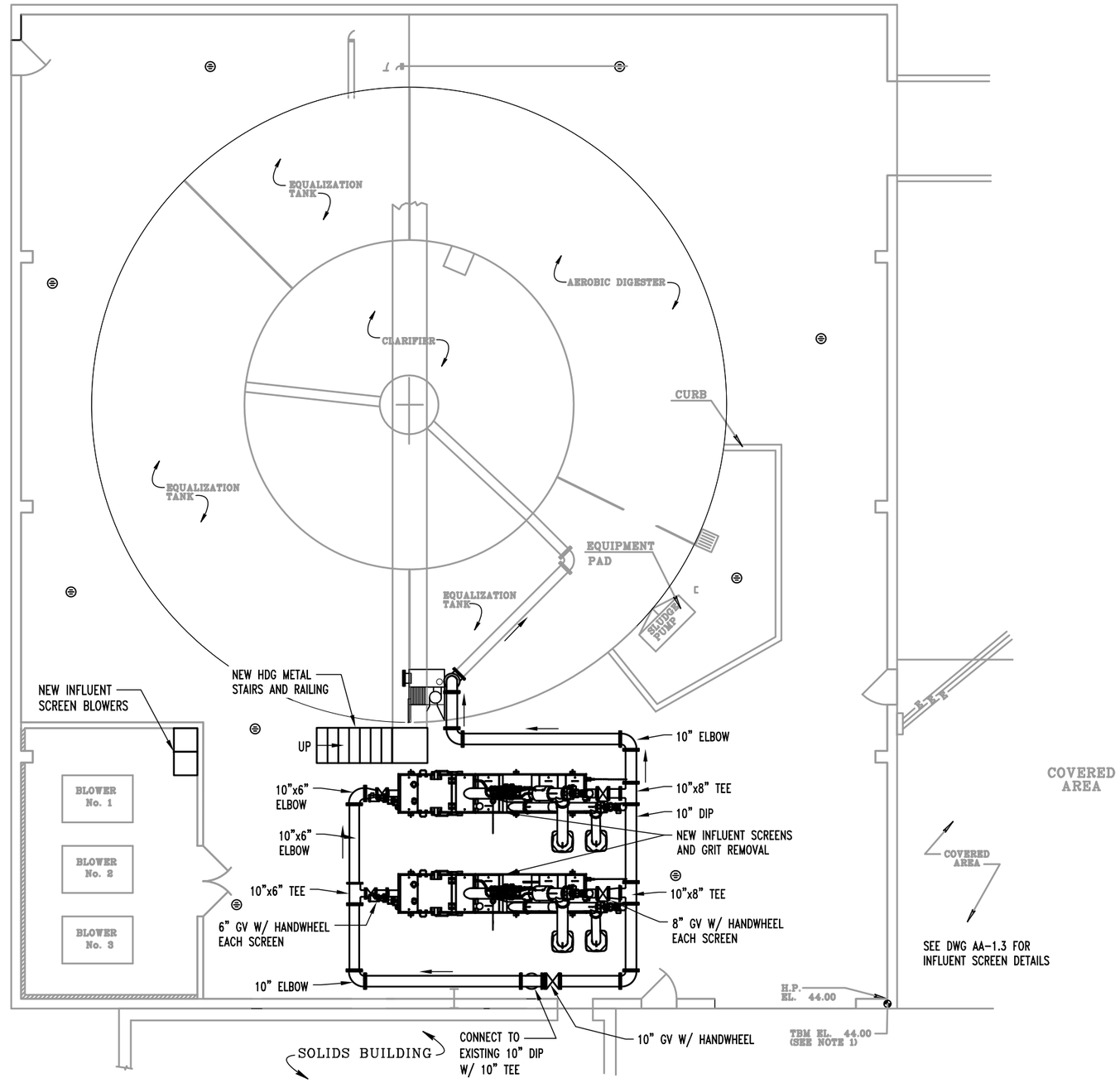

REV	DATE	BY	DESCRIPTION

SCALE GRAPHIC
DESIGNED JLD
DRAWN GDM
CHECKED JLD
DATE OCT 2016

Haines Borough, Alaska

HAINES BOROUGH

2016 WASTEWATER TREATMENT PLANT UPGRADE

STATE OF ALASKA 49TH JAMES L. DORN CE 5323 10/13/16 REGISTERED PROFESSIONAL ENGINEER

Carson Dorn Inc.
712 WEST 12TH STREET
JUNEAU, ALASKA 99801
(907) 586-4447

AA-1 INFLUENT SCREENS EQUIPMENT & PIPING PLAN

DRAWING AA-1.2

SHEET No. 28 of 29

ENGDM:2CAD\SE_AK\HAINES\2016 WASTEWATER TREATMENT PLANT\AA12.DWG 10/13/2016 3:31:15 PM AST

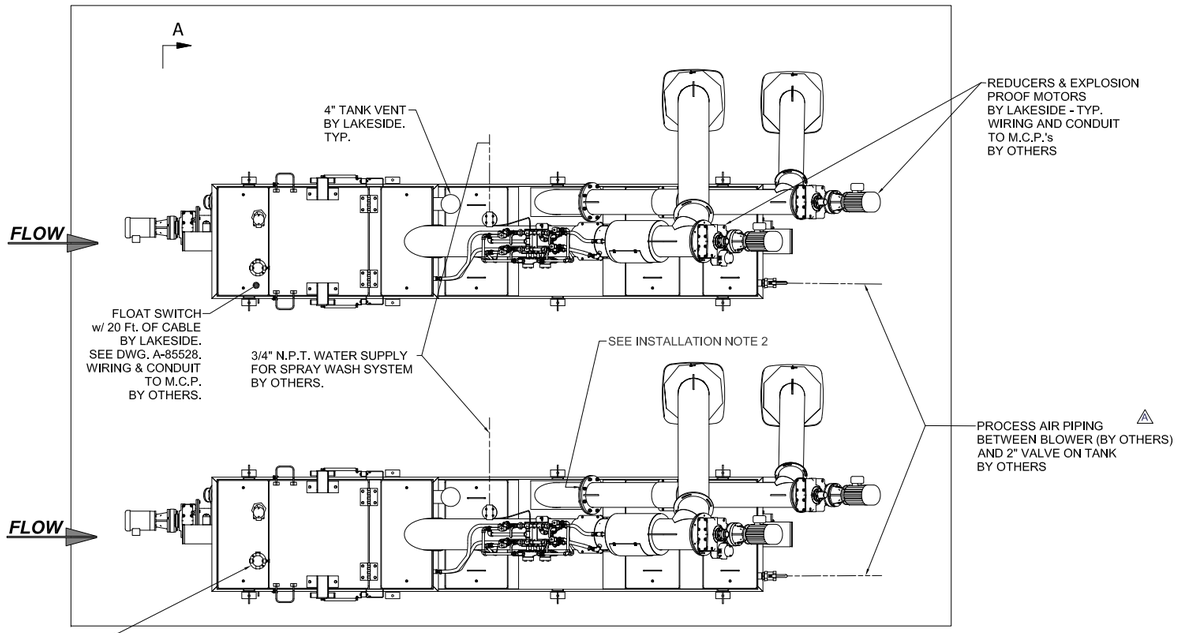

PLAN

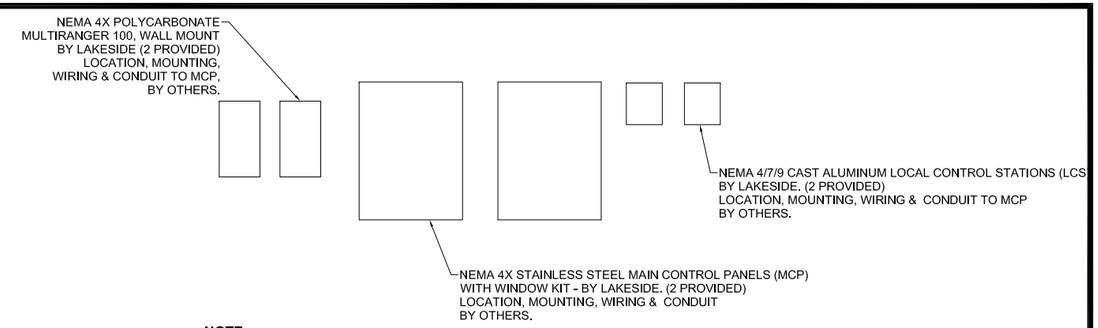

NOTE:
THESE CONTROL PANELS HAVE BEEN DESIGNED TO POWER ONLY THOSE ELECTRICAL LOADS SPECIFICALLY SHOWN OR NOTED ON LAKESIDE ELECTRICAL DRAWINGS. CONNECTIONS TO OTHER POWER CONSUMING DEVICES WILL VOID THE WARRANTY.

SAFETY WARNING:
THESE ARE INHERENT DANGERS WHILE INSTALLING OR OPERATING ELECTRICALLY POWERED MECHANICAL EQUIPMENT. CONSULT AND WORK WITH YOUR PROJECT SAFETY COORDINATOR TO DETERMINE ALL NECESSARY CAUTION IS EXERCISED AND GUARDING IS BEING PROVIDED TO PREVENT ACCIDENTS.

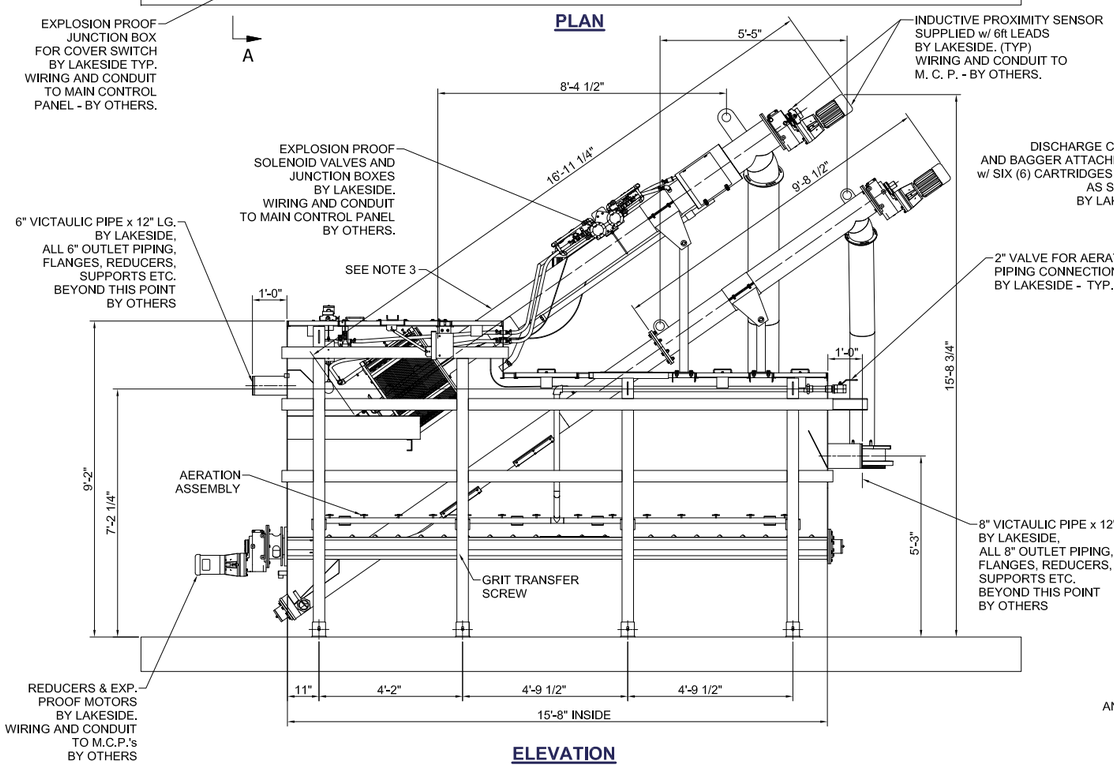

ELEVATION

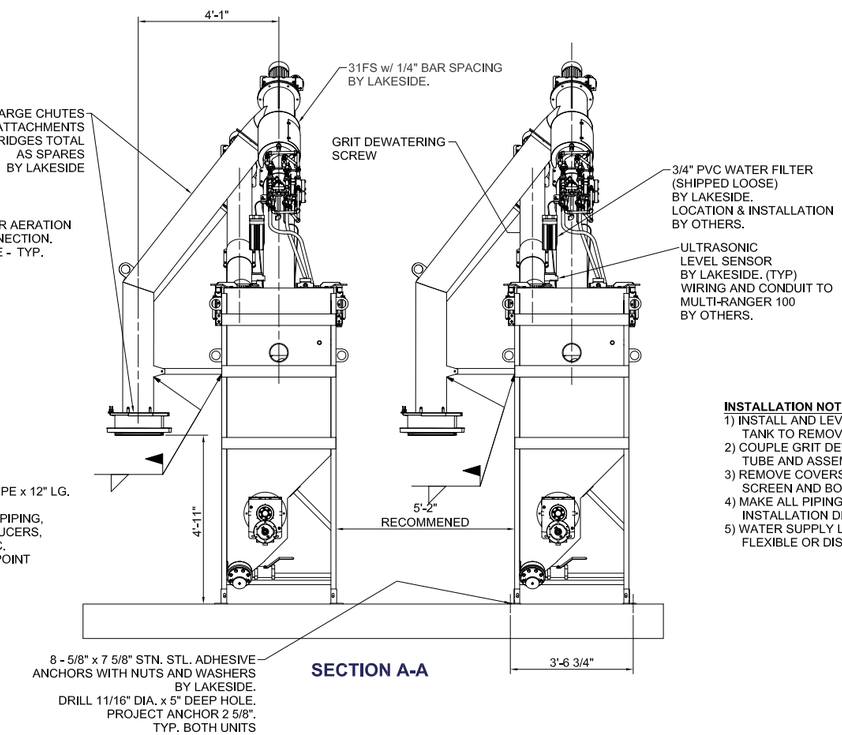

SECTION A-A

INSTALLATION NOTES:
1) INSTALL AND LEVEL TANK. USE LINE ACROSS OUTSIDE BOTTOM OF TANK TO REMOVE ANY WARPAGE. ADJUST MOUNTING FEET w/TOLERANCE ± 1/8".
2) COUPLE GRIT DEWATERING SCREW AND INSERT INTO GRIT TUBE AND ASSEMBLE AT FLANGED CONNECTION.
3) REMOVE COVERS ON FINE SCREEN COMPARTMENT. LOWER IN FINE SCREEN AND BOLT AS REQ'D. TO DEFLECTOR PLATE. RE-INSTALL COVERS .
4) MAKE ALL PIPING, DRAIN AND HOSE CONNECTIONS PER THIS INSTALLATION DRAWING AND FIELD CONNECTION DIAGRAM.
5) WATER SUPPLY LINES AND ELECTRICAL CONNECTIONS TO BE FLEXIBLE OR DISCONNECT TYPE TO ALLOW UNIT TO PIVOT OUT OF TANK.

REV	DATE	BY	DESCRIPTION

SCALE GRAPHIC
DESIGNED JLD
DRAWN GDM
CHECKED JLD
DATE OCT 2016

Haines Borough, Alaska

HAINES BOROUGH
2016 WASTEWATER TREATMENT PLANT UPGRADE

STATE OF ALASKA 49TH JAMES L. DORN CE 5323 10/13/16 REGISTERED PROFESSIONAL ENGINEER

Carson Dorn Inc.
712 WEST 12TH STREET
JUNEAU, ALASKA 99801
(907) 586-4447

AA-1 INFLUENT SCREENS DETAILS

DRAWING AA-1.3
SHEET No. 29 of 29

E:\GDM\2CAD\SE_AK\HAINES\2016 WASTEWATER TREATMENT PLANT BUILDING UPGRADE\2016 HAINES WASTEWATER UPDATES AA1.3-SCREENDTLS.DWG 10/13/2016 3:31:15 PM AST

LEGEND

ABBREVIATIONS:

ACH	ABOVE CABINET HEIGHT
AFF	ABOVE FINISHED FLOOR
AFG	ABOVE FINISHED GRADE
ATS	AUTOMATIC TRANSFER SWITCH
C.O.	CONDUIT ONLY
EMT	ELECTRICAL METALLIC TUBING
GFI	GROUND FAULT INTERRUPTED
HR	HOME RUN
M.B.	MOUNTING BOARD
OC	ON CENTER
OHE	OVERHEAD ELECTRICAL
PE	PHOTOELECTRIC CELL
PVC	POLYVINYL CHLORIDE CONDUIT
RSC	RIGID STEEL CONDUIT
TB	TERMINAL BOARD
UGE	UNDERGROUND ELECTRICAL
UON	UNLESS OTHERWISE NOTED
WP	WEATHERPROOF
XFMR	TRANSFORMER

SHEET NOTE SYMBOLS:

- E — EXISTING TO REMAIN
- N — NEW
- R — RELOCATE EXISTING
- X — REMOVE EXISTING
- X — REVISION SYMBOL

POWER:

- DUPLEX RECEPTACLE
- DOUBLE DUPLEX RECEPTACLE
- SPECIAL RECEPTACLE
- EQUIPMENT CONNECTION
- J — JUNCTION BOX
- C — CONDULET OR CONDUIT BODY
- PUSH BUTTON
- MOTOR CONNECTION
- MOTOR STARTER
- COMBINATION STARTER/DISCONNECT
- DISCONNECT
- S_M — MANUAL STARTER
- S — SELECTOR SWITCH
- T — THERMOSTAT, 46" AFF

SERVICE EQUIPMENT:

- T — TRANSFORMER
- PANELBOARD
- MAIN DISTRIBUTION PANEL
- UTILITY METER

DIAGRAM SYMBOLS:

- AUTOMATIC TRANSFER SWITCH
- CIRCUIT BREAKER
- CONTACT
- DISCONNECT OR SWITCH
- GENERATOR
- GROUND BUS
- GROUND ROD
- M — METER
- R — RELAY
- TDR — TIME DELAY RELAY
- ST — SHUNT TRIP
- CURRENT TRANSFORMER
- TRANSFORMER

LIGHTING:

- SURFACE OR SUSPENDED LINEAR LUMINAIRE
- WALL MOUNTED EXIT LUMINAIRE
- STRIP LUMINAIRE
- EMERGENCY (BUG EYE) LUMINAIRE
- EXTERIOR WALL MOUNTED LUMINAIRE

LIGHTING CONTROLS:

- S — SINGLE POLE SWITCH
- S_3 — THREE WAY SWITCH
- O W — OCCUPANCY SENSOR: W=WALL SWITCH

CONDUIT & CONDUCTORS:

- HOME RUN
- CONDUIT: 1/2" UON.
- UNGROUNDED CONDUCTORS (#12 AWG)
- NEUTRAL: #10 WITH DOT
  #12 OTHERWISE
- GROUND CONDUCTOR

CONDUCTORS NOT SHOWN WHERE ONLY #12 NEUTRAL AND UNGROUNDED CONDUCTOR ARE REQUIRED

- CONDUIT IN FLOOR OR UNDERGROUND
- FLEXIBLE CONDUIT

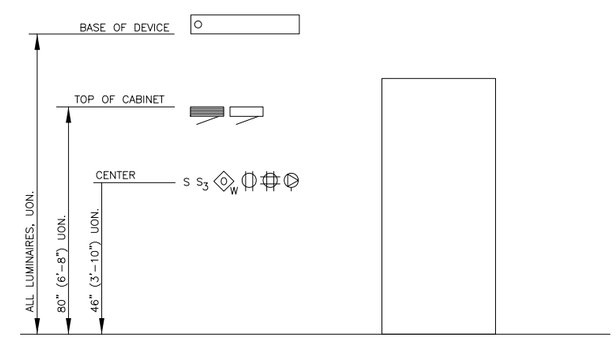

TYPICAL DEVICE MOUNTING HEIGHTS

NO SCALE

NOTES:

1. HEIGHTS SHOWN ARE TYPICAL TO CENTERLINE OF BOX UNLESS OTHERWISE NOTED.

HAIGHT & ASSOCIATES
CONSULTING ELECTRICAL ENGINEERS
526 Main Street, Juneau, AK 99801
(907) 586-9788

REV	DATE	BY	DESCRIPTION

SCALE GRAPHIC
DESIGNED BCH
DRAWN REJ
CHECKED BCH
DATE OCTOBER 2016

Haines Borough, Alaska

HAINES BOROUGH

HAINES 2016 WASTEWATER TREATMENT PLANT BUILDING UPGRADE

Carson Dorn Inc.
712 WEST 12TH STREET
JUNEAU, ALASKA 99801
(907) 586-4447

LEGEND, DETAILS

DRAWING E-1

SHEET No. 1 of 11

Plotted 10/28/2016 10:30 AM by Peggy Leslie F:\PROJECTS\127 CARSON DORN INC\143 HAINES WW TREATMENT PLANT\DRAWINGS\WORKING\E-1.DWG

NOTES:

1. THIS DRAWING ILLUSTRATES THE EXISTING FACILITY WITH MODIFICATIONS AND ADDITIONS IDENTIFIED.
2. RETAIN OPERATION OF PROCESS EQUIPMENT WITH LIMITED OUTAGES TO TRANSFER FROM EXISTING TO TEMPORARY TO NEW CIRCUITS. PROVIDE TEMPORARY CIRCUITS AS NEEDED WHILE THE BUILDING IS REPLACED.

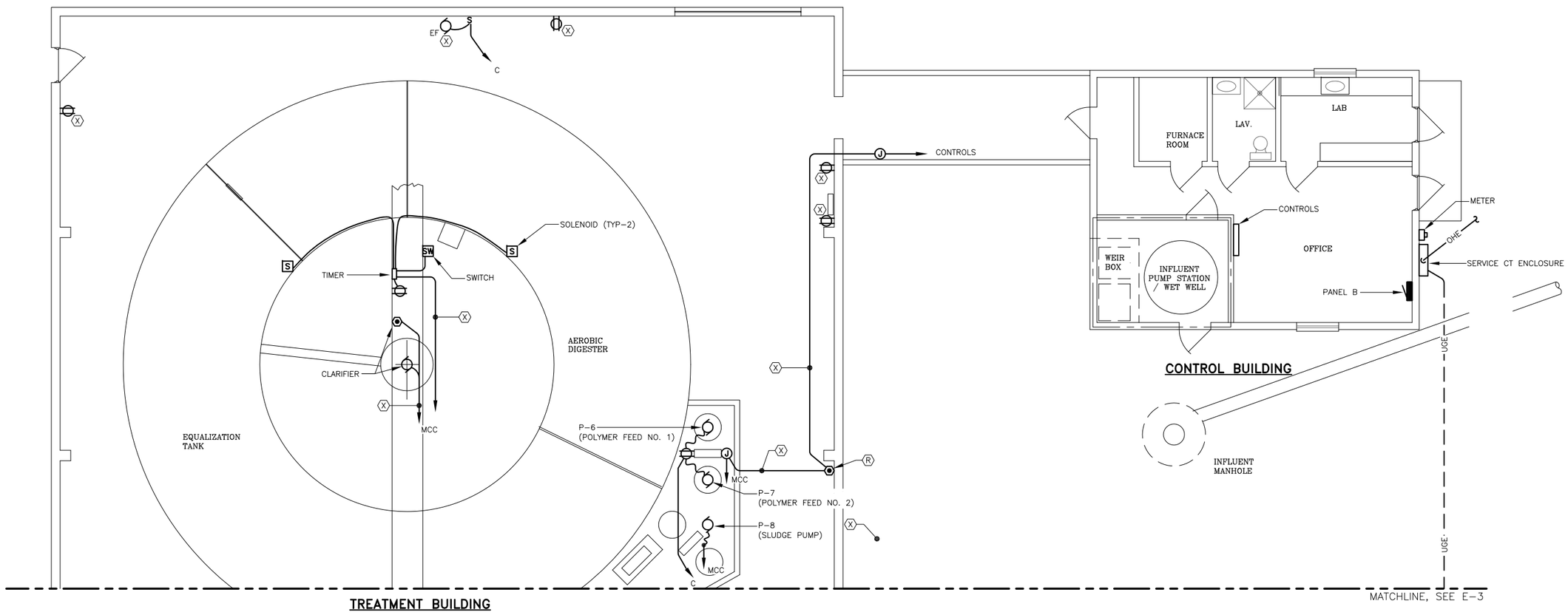

1 TREATMENT PLANT – EXISTING POWER

SCALE: 0 2' 4' 8'

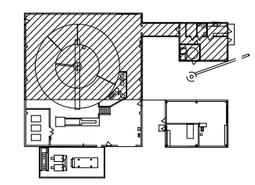

KEY PLAN

HAIGHT & ASSOCIATES
CONSULTING ELECTRICAL ENGINEERS
526 Main Street, Juneau, AK 99801
(907) 586-9788

REV	DATE	BY	DESCRIPTION

SCALE GRAPHIC
DESIGNED BCH
DRAWN REJ
CHECKED BCH
DATE OCTOBER 2016

Haines Borough, Alaska

HAINES BOROUGH

HAINES 2016 WASTEWATER TREATMENT PLANT BUILDING UPGRADE

Carson Dorn Inc.
712 WEST 12TH STREET
JUNEAU, ALASKA 99801
(907) 586-4447

TREATMENT PLANT – EXISTING POWER

DRAWING E-2

SHEET No. 2 of 11

Plotted 10/28/2016 10:30 AM by Peggy Leslie F:\PROJECTS\127 CARSON DORN INC\143 HAINES WW TREATMENT PLANT\DRAWINGS\WORKING\E-2.DWG

NOTES:

1. THIS DRAWING ILLUSTRATES THE EXISTING FACILITY WITH MODIFICATIONS AND ADDITIONS IDENTIFIED.
2. NUMEROUS CONDUITS ARE ROUTED BENEATH AN OPEN CANOPY BETWEEN THE TWO BUILDINGS. REMOVE AND REROUTE THE CIRCUITS WITH THESE CONDUITS UNDERGROUND. ACCOMMODATE REPLACING THE BUILDING. (EXISTING: (3EA) 1-1/4"C, AND (10EA) 3/4"C)
3. RELOCATE PANEL C ONTO A TEMPORARY STAND JUST INSIDE THE WALLS OF THE BUILDING. PROVIDE A TEMPORARY FEEDER FROM MCC.
4. PROVIDE NEW UNDERGROUND CONDUIT AND CONDUCTORS FOR PROCESS EQUIPMENT FROM SHOP/ELEC BUILDING. TO THE SOLIDS BUILDING. PROVIDE JUNCTION BOXES AT LOCATIONS APPROPRIATE FOR CONNECTIONS TO EQUIPMENT. INSTALL PRIOR TO DECOMMISSIONING THE EXISTING CIRCUITS.
5. PROVIDE INDIVIDUAL CONDUITS FROM THIS JUNCTION BOX TO EXISTING EQUIPMENT. INTEGRATE WITH EXISTING CONDUIT WHERE POSSIBLE.
6. RETAIN OPERATION OF PROCESS EQUIPMENT WITH LIMITED OUTAGES TO TRANSFER FROM EXISTING TO TEMPORARY TO NEW CIRCUITS. PROVIDE TEMPORARY CIRCUITS AS NEEDED WHILE THE BUILDING IS REPLACED.
7. (AA-1): REMOVE WITH AWARD OF ADDITIVE ALTERNATE NO. 1.

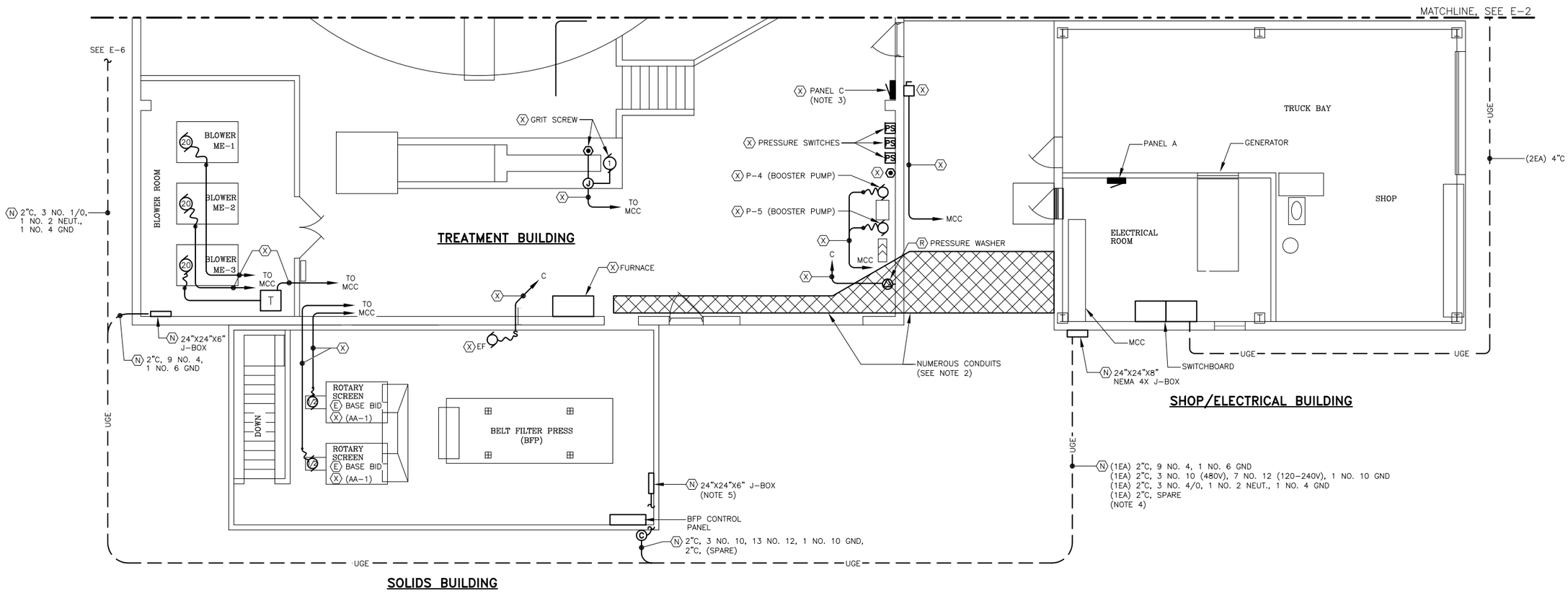

1 TREATMENT PLANT - EXISTING POWER

SCALE: 0 2' 4' 8'

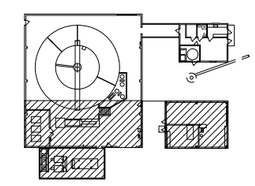

KEY PLAN

HAIGHT & ASSOCIATES
CONSULTING ELECTRICAL ENGINEERS
526 Main Street, Juneau, AK 99801
(907) 586-9788

REV	DATE	BY	DESCRIPTION

SCALE GRAPHIC
DESIGNED BCH
DRAWN REJ
CHECKED BCH
DATE OCTOBER 2016

Haines Borough, Alaska

HAINES BOROUGH

HAINES 2016 WASTEWATER TREATMENT PLANT BUILDING UPGRADE

Carson Dorn Inc.
712 WEST 12TH STREET
JUNEAU, ALASKA 99801
(907) 586-4447

TREATMENT PLANT - EXISTING POWER

DRAWING E-3

SHEET No. 3 of 11

Plotted 10/28/2016 10:30 AM by Peggy Leslie F:\PROJECTS\127 CARSON DORN INC\143 HAINES WW TREATMENT PLANT\DRAWINGS\WORKING\E-3.DWG

NOTES:

1. THE TREATMENT BUILDING IS DECLASSIFIED FROM NEC CLASS 1, DIV 1 TO CLASS 1, DIV 2 WITH OPERATION FO THE EXHAUST FAN, EF. CONSTRUCT TO CLASS 1, DIV 2.

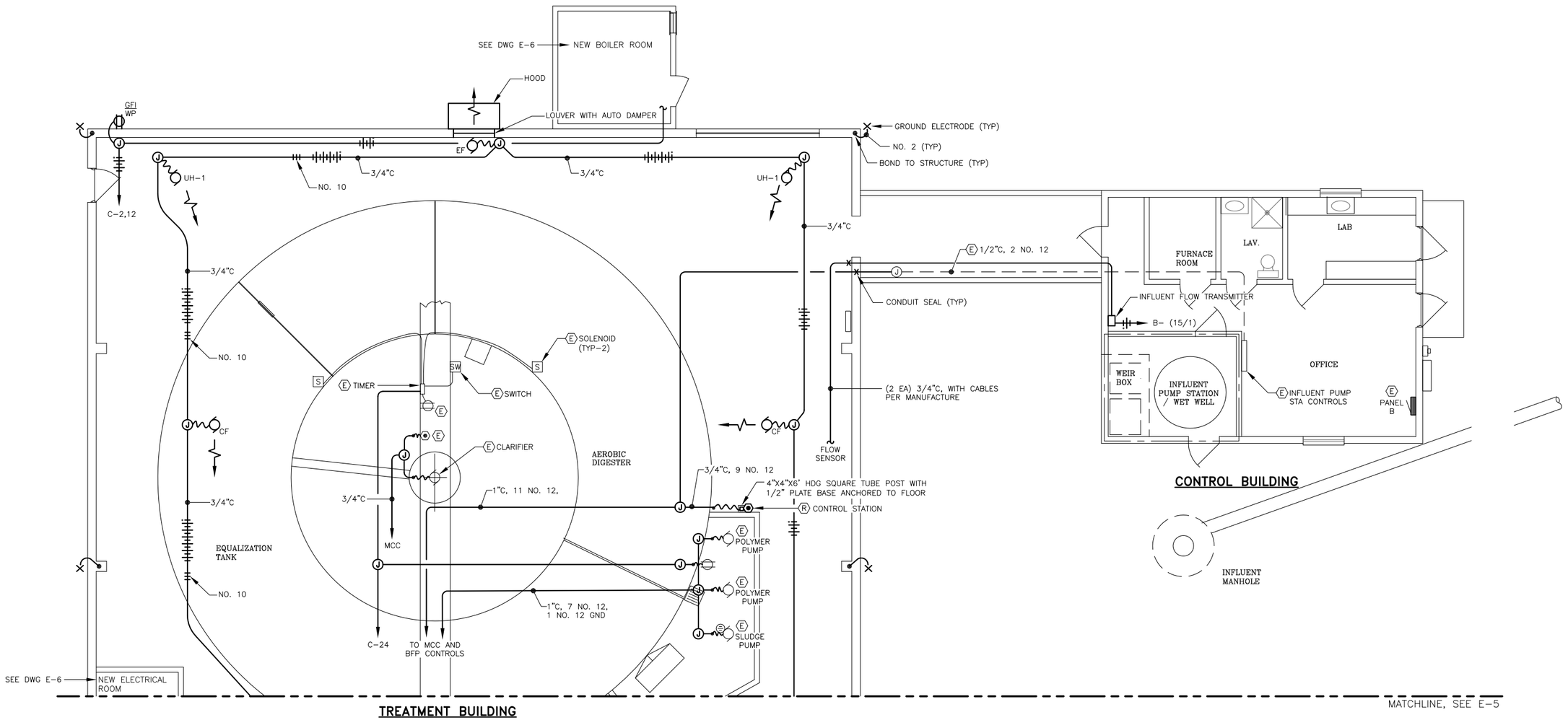

1 TREATMENT PLANT – NEW POWER

SCALE: 0 2' 4' 8'

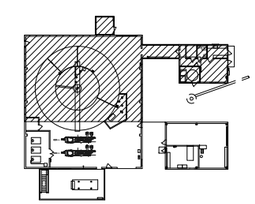

KEY PLAN

HAIGHT & ASSOCIATES
CONSULTING ELECTRICAL ENGINEERS
526 Main Street, Juneau, AK 99801
(907) 586-9788

REV	DATE	BY	DESCRIPTION

SCALE GRAPHIC
DESIGNED BCH
DRAWN REJ
CHECKED BCH
DATE OCTOBER 2016

Haines Borough, Alaska

HAINES BOROUGH

HAINES 2016 WASTEWATER TREATMENT PLANT BUILDING UPGRADE

Carson Dorn Inc.
712 WEST 12TH STREET
JUNEAU, ALASKA 99801
(907) 586-4447

TREATMENT PLANT – NEW POWER

DRAWING E-4

SHEET No. 4 of 11

Plotted 10/28/2016 10:30 AM by Peggy Leslie F:\PROJECTS\127 CARSON DORN INC\143 HAINES WW TREATMENT PLANT\DRAWINGS\WORKING\E-4.DWG

NOTES:

1. THE TREATMENT BUILDING IS DECLASSIFIED FROM NEC CLASS 1, DIV 1 TO CLASS 1, DIV 2 WITH OPERATION FO THE EXHAUST FAN, EF. CONSTRUCT TO CLASS 1, DIV 2.
2. PROVIDE CIRCUITS FROM THE CONTROL PANEL TO LOCATIONS ON THE EQUIPMENT IN ACCORDANCE TO THE MANUFACTURERS' INSTRUCTIONS.
3. (AA–1): PROVIDE NEW INFLUENT SCREENS AND REMOVE EXISTING ROTARY SCREENS WITH AWARD OF ADDITIVE ALTERNATE NO. 1. INCLUDE ASSOCIATED ANCILLARY COMPONENTS AND CIRCUITS.

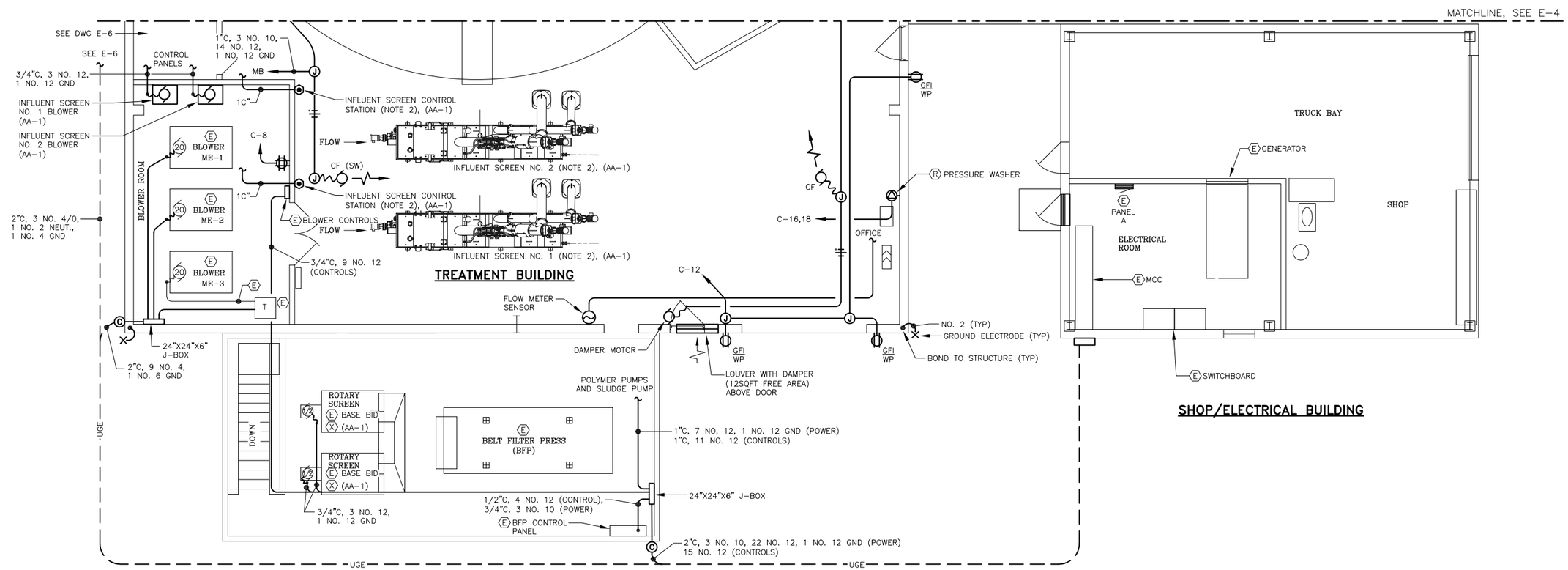

1 TREATMENT PLANT – NEW POWER

SCALE: 0 2' 4' 8'

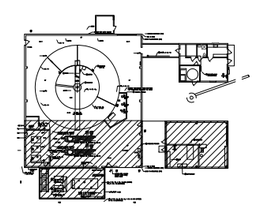

KEY PLAN

HAIGHT & ASSOCIATES
CONSULTING ELECTRICAL ENGINEERS
526 Main Street, Juneau, AK 99801
(907) 586-9788

REV	DATE	BY	DESCRIPTION

SCALE GRAPHIC
DESIGNED BCH
DRAWN REJ
CHECKED BCH
DATE OCTOBER 2016

Haines Borough, Alaska

HAINES BOROUGH

HAINES 2016 WASTEWATER TREATMENT PLANT BUILDING UPGRADE

Carson Dorn Inc.
712 WEST 12TH STREET
JUNEAU, ALASKA 99801
(907) 586–4447

TREATMENT PLANT – NEW POWER

DRAWING E–5

SHEET No. 5 of 11

Plotted 10/28/2016 10:30 AM by Peggy Leslie F:\PROJECTS\127 CARSON DORN INC\143 HAINES WW TREATMENT PLANT\DRAWINGS\WORKING\E-5.DWG

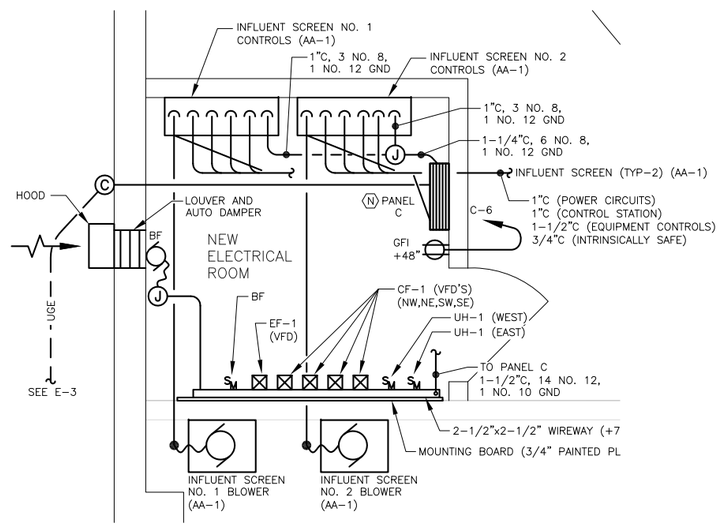

2 ENLARGED ELECTRICAL ROOM PLAN – POWER

SCALE: 0 6" 1' 2'

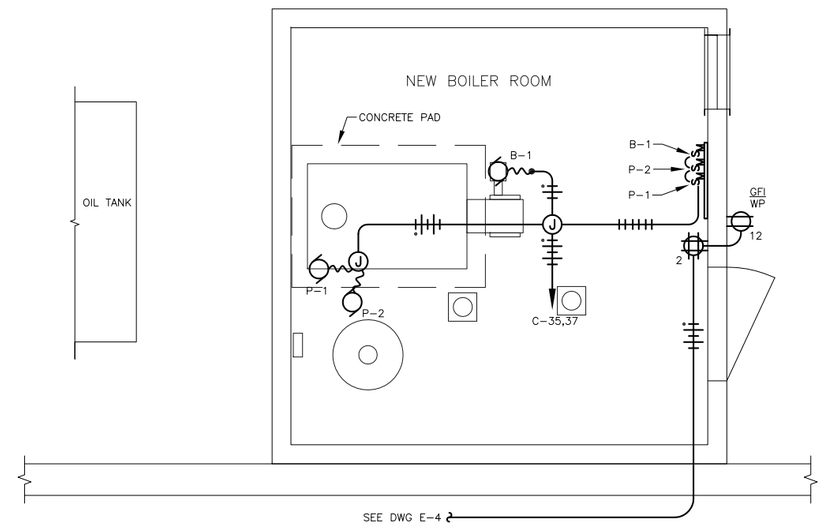

1 ENLARGED BOILER ROOM PLAN – POWER

SCALE: 0 1' 2' 4'

NOTES:

1. REFER TO ROTARY SCREEN MANUFACTURER FOR CIRCUIT REQUIREMENTS.
2. (AA-1): PROVIDE NEW INFLUENT SCREENS, ANCILLARY EQUIPMENT AND CIRCUITS WITH AWARD OF ADDITIVE ALTERNATE NO. 1.

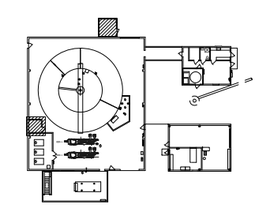

KEY PLAN

HAIGHT & ASSOCIATES
CONSULTING ELECTRICAL ENGINEERS
526 Main Street, Juneau, AK 99801
(907) 586-9788

REV	DATE	BY	DESCRIPTION

SCALE GRAPHIC
DESIGNED BCH
DRAWN REJ
CHECKED BCH
DATE OCTOBER 2016

Haines Borough, Alaska

HAINES BOROUGH

HAINES 2016 WASTEWATER TREATMENT PLANT BUILDING UPGRADE

Carson Dorn Inc.
712 WEST 12TH STREET
JUNEAU, ALASKA 99801
(907) 586-4447

ENLARGED BOILER & ELECTRICAL ROOM POWER

DRAWING E-6

SHEET No. 6 of 11

Plotted 10/28/2016 10:30 AM by Peggy Leslie F:\PROJECTS\127 CARSON DORN INC\143 HAINES WW TREATMENT PLANT\DRAWINGS\WORKING\E-6.DWG

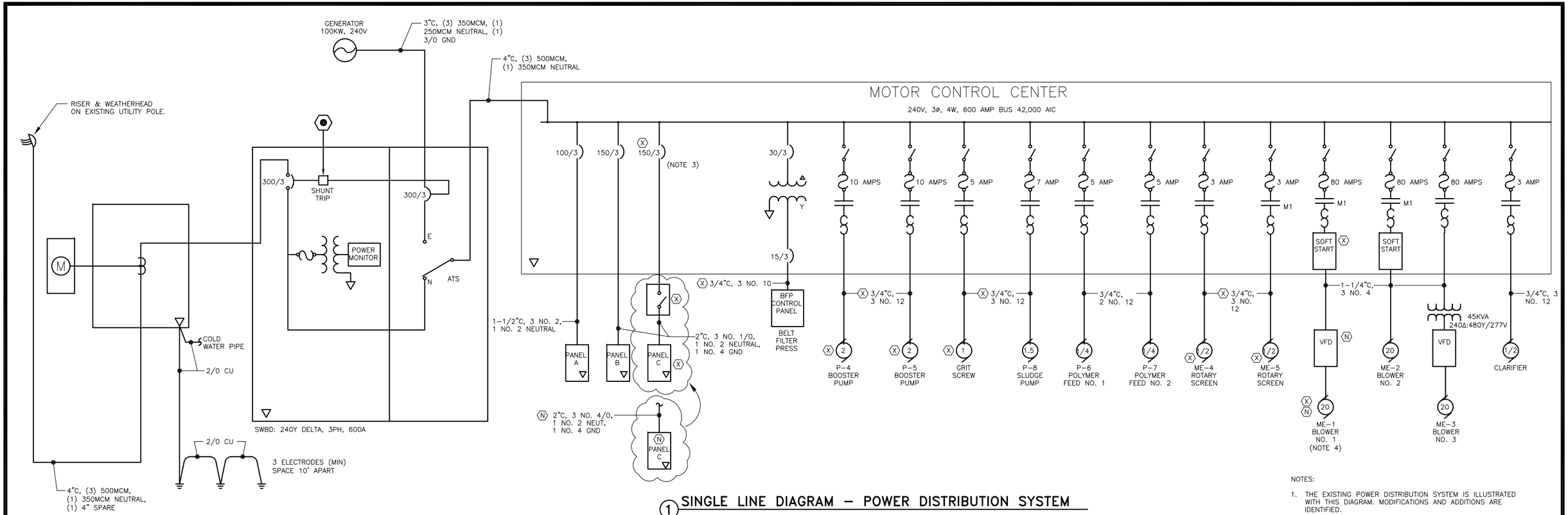

1 SINGLE LINE DIAGRAM – POWER DISTRIBUTION SYSTEM

NOTES:

1. THE EXISTING POWER DISTRIBUTION SYSTEM IS ILLUSTRATED WITH THIS DIAGRAM. MODIFICATIONS AND ADDITIONS ARE IDENTIFIED.
2. THE SERVICE IS 120–240V, DELTA CONFIGURED, WITH NEUTRAL FROM THE CENTER TAP OF ONE WINDING. PROVIDE LABELING AS REQUIRED THROUGHOUT THE SYSTEM WITH REGARD TO THE WILD LEG PER NEC 215–8.
3. REPLACE WITH 225/3 CIRCUIT BREAKER.
4. PROVIDE NEW CONNECTION FOR REPLACED BLOWER AND VFD.

MECHANICAL EQUIPMENT SCHEDULE

DESIGNATION			LOAD					CIRCUITING				CONTROL		
ITEM	DESCRIPTION	LOCATION	HP	KW	AMPS	VOLTS	PHASE	RATING	CONDUCTORS	DISCONNECT SWITCH	DISCONNECT FUSE	STARTER SIZE	CONTROL	REMARKS
B–1	BOILER	BOILER ROOM	1/3			120	1	20/1	2 NO. 12, 1 NO. 12 GND	S	–	–	–	
P–1	PUMP	BOILER ROOM	1/6			120	1	20/1	2 NO. 12, 1 NO. 12 GND	S_M	–	0	–	
P–2	PUMP	BOILER ROOM	1/6			120	1	20/1	2 NO. 12, 1 NO. 12 GND	S_M	–	0	–	
UH–1	UNIT HEATER	TREATMENT BUILDING	1/3			120	1	20/1	2 NO. 12, 1 NO. 12 GND	S_M	–	0	–	LOCKING TYPE.
EF–1	EXHAUST FAN: STANDARD, FORWARD FLOW HEAVY DUTY, CORROSION RESISTANT, INDUSTRIAL PANEL FAN WITH DIRECT DRIVE, TEFC MOTOR. PROVIDE WITH AUTOMATIC DAMPER AND SCREEN HOOD. BASIS OF DESIGN: HARTZELL A02SH WITH AIR FLOW = 14,000 CFM, OR GREATER.	TREATMENT BUILDING	3			240	3		3 NO. 10, 1 NO. 12 GND	30A	–	–	–	PROVIDE WITH VFD. MOUNT NEAR ROOF PEAK.
CF–1	CIRCULATION FAN: HEAVY DUTY, CORROSION RESISTANT, AXIAL FAN WITH DIRECT DRIVE, TEFC MOTOR. FLAT BASE, STATIONARY MOUNT. BASIS OF DESIGN: HARTZELL A22T242NA WITH AIR FLOW = 5,000 CFM OR GREATER.	TREATMENT BUILDING	1/4			120	1	20/1	2 NO. 12, 1 NO. 12 GND	S	–	–	–	PROVIDE WITH VFD. MOUNT TO ROOF.
BF	BLOWER FAN: REVERSE FLOW, HEAVY DUTY INDUSTRIAL PANEL FAN WITH DIRECT DRIVE TEFC MOTOR. PROVIDE WITH AUTOMATIC DAMPER AND SCREENED HOOD. BASIS OF DESIGN: HARTZELL A02SH WITH AIR FLOW = 200 CFM, NOMINAL.	ELECTRICAL ROOM	1/6			120	1	20/1	2 NO. 12, 1 NO. 12 GND	S_M	–	0	–	MOUNT @ 6' ±
FM	INFLUENT FLOW METER: BASIS OF DESIGN: ROSEMOUNT 8750W.	TREATMENT BUILDING				120	1	20/1	2 NO. 12, 1 NO. 12 GND					MOUNT @ 5'–6"

HAIGHT & ASSOCIATES
CONSULTING ELECTRICAL ENGINEERS
526 Main Street, Juneau, AK 99801
(907) 586-9788

REV	DATE	BY	DESCRIPTION

SCALE GRAPHIC
DESIGNED BCH
DRAWN REJ
CHECKED BCH
DATE OCTOBER 2016

Haines Borough, Alaska

HD = HEAVY DUTY GD = GENERAL DUTY SW = SWITCH

HAINES BOROUGH

HAINES 2016 WASTEWATER TREATMENT PLANT BUILDING UPGRADE

Carson Dorn Inc.
712 WEST 12TH STREET
JUNEAU, ALASKA 99801
(907) 586–4447

SINGLE LINE DIAGRAM, MECHANICAL EQUIPMENT SCHEDULE

DRAWING E–7

SHEET No. 7 of 11

Plotted 10/28/2016 10:30 AM by Peggy Leslie F:\PROJECTS\127 CARSON DORN INC\143 HAINES WW TREATMENT PLANT\DRAWINGS\WORKING\E-7.DWG

PANEL C

SIZE	VOLTS/PHASE	MAIN	LOCATION	MOUNT
225 AMPS	240Y/120V, 3 PH	MLO	NEW ELECTRICAL ROOM	SURFACE

CKT NO	DESCRIPTION		BREAKER AMP/POLE	KVA CKT	KVA AØ	KVA BØ	KVA CØ	KVA CKT	BREAKER AMP/POLE	DESCRIPTION	CKT NO
1	EXTERIOR	LTG	20/1	0.1	0.5			0.4	20/1	BOILER ROOM	2
3	---- WILD LEG ----			0.0		0.0		0.0		---- WILD LEG ----	4
5	TREATMENT BUILDING	LTG	20/1	0.6			0.8	0.2	20/1	ELECTRICAL ROOM	6
7	TREATMENT BUILDING	LTG	20/1	0.5	0.9			0.4	20/1	BLOWER ROOM	8
9	---- WILD LEG ----			0.0		0.0		0.0		---- WILD LEG ----	10
11	SOLIDS BUILDING LOWER	LTG	20/1	1.3			2.2	0.9	20/1	EXTERIOR	12
13	SOLIDS BUILDING UPPER	LTG	20/1	1.3	1.3			0.0		SPACE	14
15	---- WILD LEG ----			0.0		0.9		0.9	20/2	PRESSURE	16
17	BOILER, ELECTRICAL, HALLWAY, BLOWER	LTG	20/1	0.9			1.8	0.9	--	WASHER	18
19	SPARE		20/1	0.0	0.0			0.0		SPACE	20
21	---- WILD LEG ----			0.0		0.0		0.0		---- WILD LEG ----	22
23	SPARE		20/1	0.0			0.1	0.1	20/1	CLARIFIER TIMER AND SOLENOIDS	24
25	SPARE		20/1	0.0	0.0			0.0		SPACE	26
27	---- WILD LEG ----			0.0		0.0		0.0		---- WILD LEG ----	28
29	SPACE			0.0			0.0	0.0		SPACE	30
31	SPACE			0.0	0.0			0.0		SPACE	32
33	---- WILD LEG ----			0.0		0.0		0.0		---- WILD LEG ----	34
35	BOILER		20/1	0.5			0.5	0.0		SPACE	36
37	PUMPS P-1 & P-2		20/1	0.4	0.4			0.0		SPACE	38
39	---- WILD LEG ----			0.0		0.0		0.0		---- WILD LEG ----	40
41	CIRCULATION FAN CF-1 (NW)		20/1	0.4			0.8	0.4	20/1	CIRCULATION FAN CF-1 (NE)	42
43	CIRCULATION FAN CF-1 (SW)		20/1	0.4	0.8			0.4	20/1	CIRCULATION FAN CF-1 (SE)	44
45	---- WILD LEG ----			0.0		0.0		0.0		---- WILD LEG ----	46
47	UNIT HEATER UH-1		20/1	0.4			0.4	0.0	20/1	SPARE	48
49	UNIT HEATER UH-1		20/1	0.4	8.6			8.2	50/3	INFLUENT SCREEN NO. 1	50
51	---- WILD LEG ----			0.0		8.2		8.2	--	----	52
53	INTAKE VENT DAMPER		15/1	0.1			8.3	8.2	--	----	54
55	EXHAUST FAN EF-1		30/3	1.2	9.4			8.2	50/3	INFLUENT SCREEN NO. 2	56
57	----		--	1.2		9.4		8.2	--	----	58
59	----		--	1.2			9.4	8.2	--	----	60
BALANCED CONNECTED LOAD: 64.7 KVA / 179.7 AMPS					21.9	18.5	24.3				
MAXIMUM PHASE LOAD: 24.3 KVA / 202.5 AMPS											

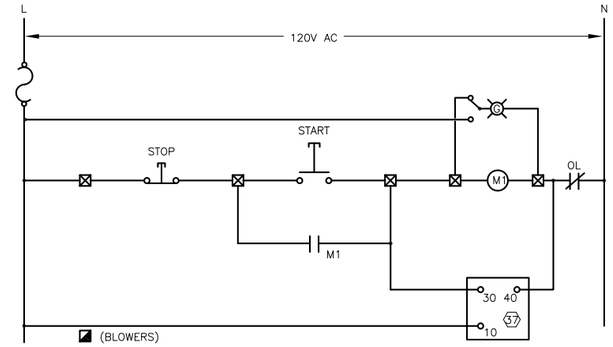

(E) 5 BLOWER CONTROLS DIAGRAM (TYP 3)

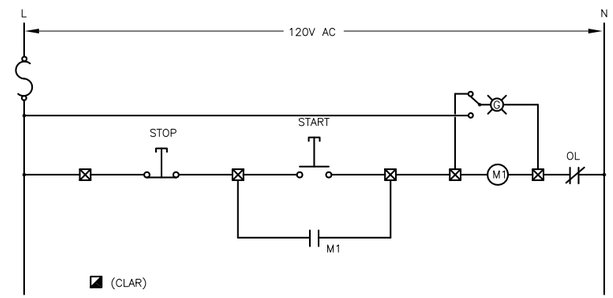

(E) 4 CLARIFIER CONTROLS DIAGRAM

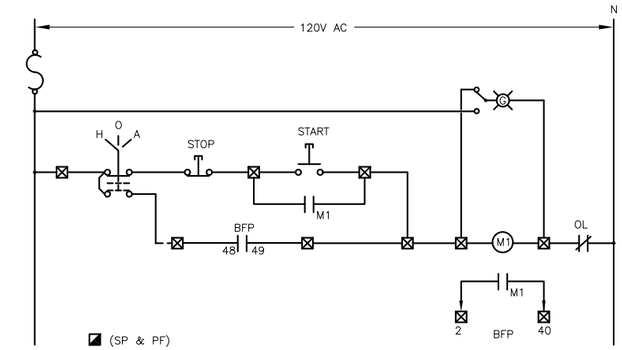

(E) 3 SLUDGE PUMP CONTROLS DIAGRAM

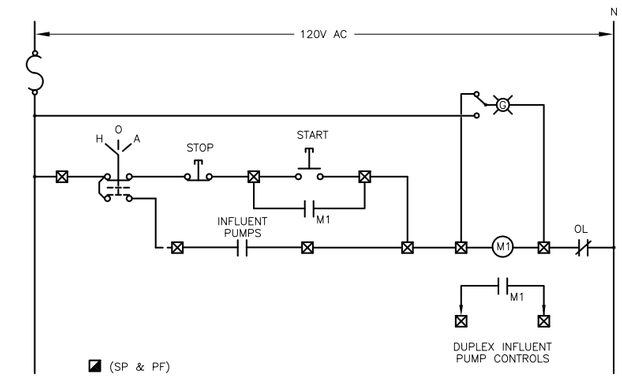

(E) 2 POLYMER FEED PUMP NO.2 CONTROL DIAGRAM

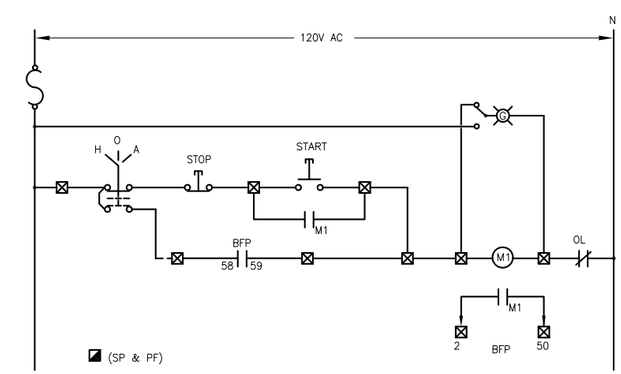

(E) 1 POLYMER FEED PUMP NO.1 CONTROL DIAGRAM

HAIGHT & ASSOCIATES
CONSULTING ELECTRICAL ENGINEERS
526 Main Street, Juneau, AK 99801
(907) 586-9788

REV	DATE	BY	DESCRIPTION

SCALE GRAPHIC
DESIGNED BCH
DRAWN REJ
CHECKED BCH
DATE OCTOBER 2016

Haines Borough, Alaska

HAINES BOROUGH

HAINES 2016 WASTEWATER TREATMENT PLANT BUILDING UPGRADE

Carson Dorn Inc.
712 WEST 12TH STREET
JUNEAU, ALASKA 99801
(907) 586-4447

CONTROL DIAGRAMS, PANEL SCHEDULE

DRAWING E-8

SHEET No. 8 of 11

Plotted 10/28/2016 10:30 AM by Peggy Leslie F:\PROJECTS\127 CARSON DORN INC\143 HAINES WW TREATMENT PLANT\DRAWINGS\WORKING\E-8.DWG

NOTES:

1. THE EXISTING LIGHTING LAYOUT IS ILLUSTRATED WITH MODIFICATIONS AND ADDITIONS IDENTIFIED.
2. REUSE THE EXISTING TYPE A IN THE TREATMENT BUILDING. OPTION: PROVIDE NEW PER LUMINAIRE SCHEDULE.

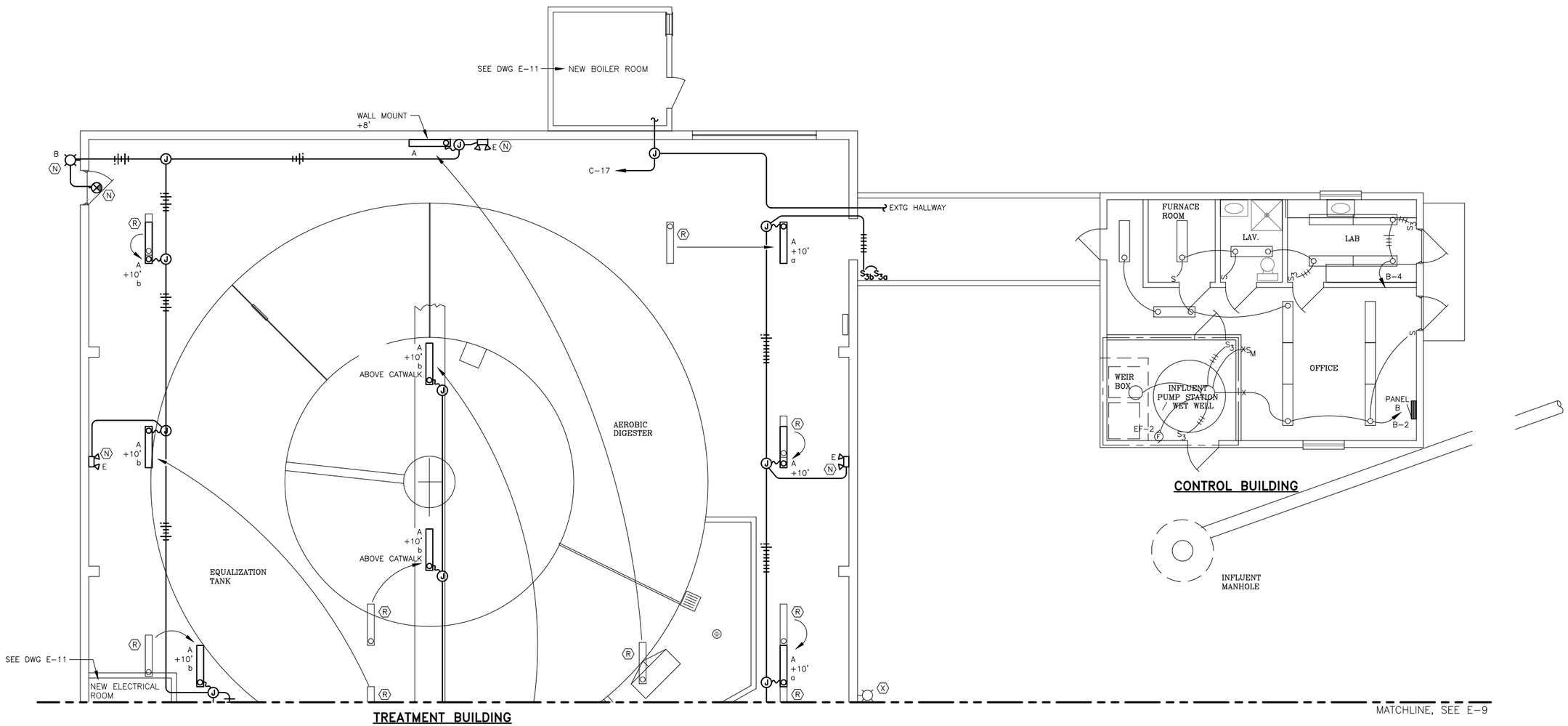

1 TREATMENT PLANT – LIGHTING

SCALE: 0 2' 4' 8'

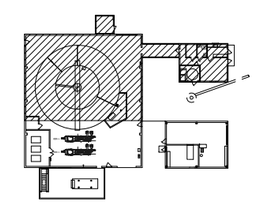

KEY PLAN

HAIGHT & ASSOCIATES
CONSULTING ELECTRICAL ENGINEERS
526 Main Street, Juneau, AK 99801
(907) 586-9788

REV	DATE	BY	DESCRIPTION

SCALE GRAPHIC
DESIGNED BCH
DRAWN REJ
CHECKED BCH
DATE OCTOBER 2016

Haines Borough, Alaska

HAINES BOROUGH

HAINES 2016 WASTEWATER TREATMENT PLANT BUILDING UPGRADE

Carson Dorn Inc.
712 WEST 12TH STREET
JUNEAU, ALASKA 99801
(907) 586-4447

TREATMENT PLANT – LIGHTING

DRAWING E-9

SHEET No. 9 of 11

Plotted 10/28/2016 10:30 AM by Peggy Leslie F:\PROJECTS\127 CARSON DORN INC\143 HAINES WW TREATMENT PLANT\DRAWINGS\WORKING\E-9.DWG

NOTES:

1. THE EXISTING LIGHTING LAYOUT IS ILLUSTRATED WITH MODIFICATIONS AND ADDITIONS IDENTIFIED.
2. REUSE THE EXISTING TYPE A IN THE TREATMENT BUILDING. OPTION: PROVIDE NEW PER LUMINAIRE SCHEDULE.

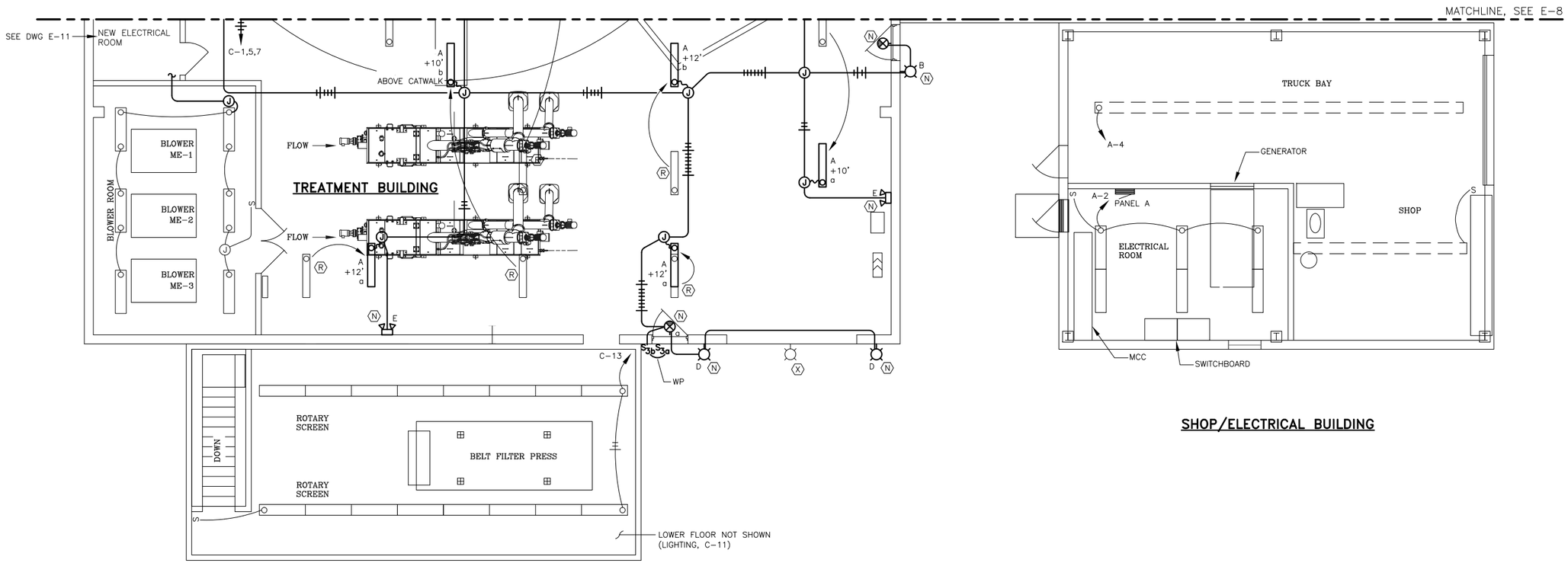

SHOP/ELECTRICAL BUILDING

SOLIDS BUILDING (UPPER FLOOR)

1 TREATMENT PLANT – LIGHTING

SCALE: 0 2' 4' 8'

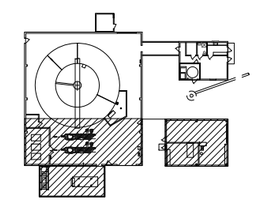

KEY PLAN

HAIGHT & ASSOCIATES
CONSULTING ELECTRICAL ENGINEERS
526 Main Street, Juneau, AK 99801
(907) 586-9788

REV	DATE	BY	DESCRIPTION

SCALE GRAPHIC
DESIGNED BCH
DRAWN REJ
CHECKED BCH
DATE OCTOBER 2016

Haines Borough, Alaska

HAINES BOROUGH

HAINES 2016 WASTEWATER TREATMENT PLANT BUILDING UPGRADE

Carson Dorn Inc.
712 WEST 12TH STREET
JUNEAU, ALASKA 99801
(907) 586-4447

TREATMENT PLANT – LIGHTING

DRAWING E-10

SHEET No. 10 of 11

Plotted 10/28/2016 10:30 AM by Peggy Leslie F:\PROJECTS\127 CARSON DORN INC\143 HAINES WW TREATMENT PLANT\DRAWINGS\WORKING\E-10.DWG

LUMINAIRE SCHEDULE

TYPE	DESCRIPTION	MANUFACTURER	LAMPS	REMARKS
A (OPTION)	4' SUSPENDED ENCLOSED LED INDUSTRIAL, FIBERGLASS HOUSING, CLEAR DEEP ACRYLIC LENS, SPREAD DISTRIBUTION, INTEGRAL ELECTRONIC DRIVER 9000 LUMENS, 120V	LITHONIA LIGHTING FEM4LED 9L 35 IMACD SD 120	122W WHITE LED 3500K, CRI 80	ELEVATION AS NOTED ON PLANS.
B	EXTERIOR LED WALL SCONCE, CAST ALUMINUM HOUSING, CLEAR GLASS LENS, INTEGRAL ELECTRONIC DRIVER, 1271 LUMENS, 120V, BUTTON PHOTOCELL, DARK BRONZE FINISH	LITHONIA LIGHTING OLWX1 LED 13W 40K 120 PE	13W WHITE LED 4000K, CRI 70	MOUNT @ 7'-0" AFG TO BOTTOM OF LUMINAIRE, UON.
C	4' SUSPENDED LED STRIP, STEEL HOUSING, NO DIFFUSER, INTEGRAL ELECTRONIC DRIVER, 5000 LUMENS, 120V, AIRCRAFT CABLE, WHITE FINISH	LITHONIA LIGHTING ZL1N L48 5000LM L/LENS 120 35K 80CRI WH ZACVH	42W WHITE LED 3500K, CRI 80	MOUNT @ 8'-0" AFF TO BOTTOM OF LUMINAIRE, UON.
D	EXTERIOR LED WALL SCONCE, CAST ALUMINUM HOUSING, CLEAR GLASS LENS, INTEGRAL ELECTRONIC DRIVER, 1854 LUMENS, 120V, BUTTON PHOTOCELL, DARK BRONZE FINISH	LITHONIA LIGHTING OLWX1 LED 20W 40K 120 PE	20W WHITE LED 4000K, CRI 70	MOUNT @ 12'-0" AFG TO BOTTOM OF LUMINAIRE, UON.
E	EMERGENCY LIGHT, WET LOCATION RATED, POLYCARBONATE HOUSING, DUAL LED HEADS, NICKEL CADMIUM BATTERY, GRAY FINISH	MULE LIGHTING WLEM-LED G	(2) 1.875W LED HEADS	
EXIT	EMERGENCY EXIT SIGN, WET LOCATION RATED, POLYCARBONATE HOUSING, GREEN LETTERS, SINGLE FACE, NICKEL CADMIUM BATTERY, WHITE FINISH	MULE LIGHTING WLMX 1 B G WH	LED	

NOTE: ALL LUMINAIRE MOUNTING HEIGHTS ARE TO THE BOTTOM OF THE LUMINAIRE, UNLESS OTHERWISE NOTED AND OR APPLICABLE.

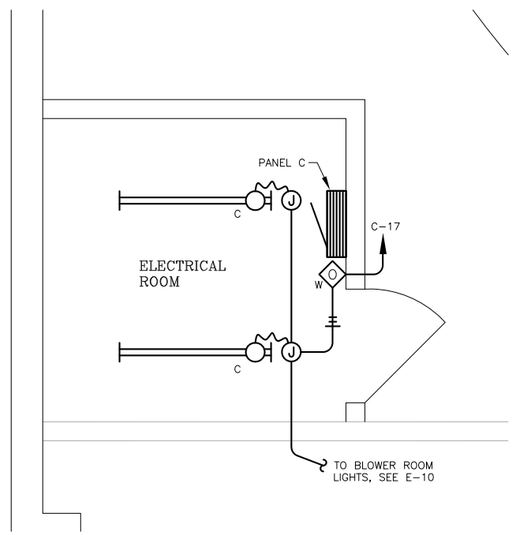

2 ENLARGED ELECTRICAL ROOM PLAN – LIGHTING

SCALE: 0 1' 2' 4'

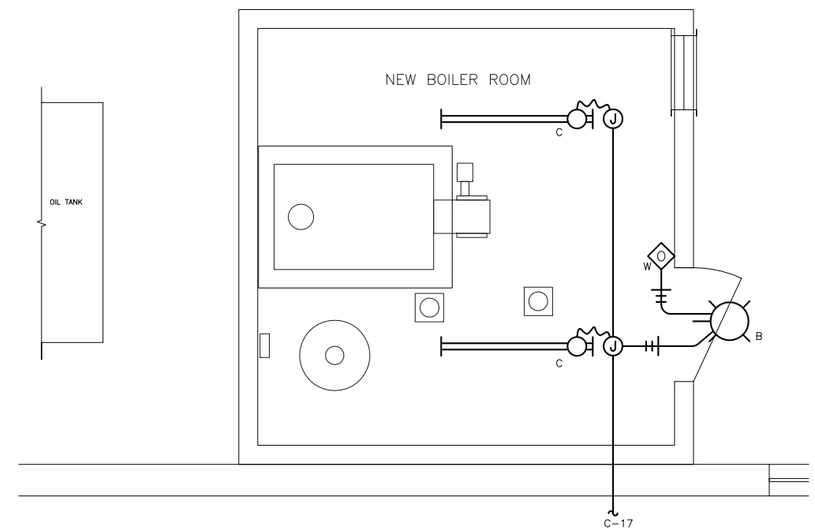

1 ENLARGED BOILER ROOM PLAN – LIGHTING

SCALE: 0 1' 2' 4'

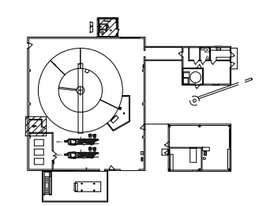

KEY PLAN

HAIGHT & ASSOCIATES
CONSULTING ELECTRICAL ENGINEERS
526 Main Street, Juneau, AK 99801
(907) 586-9788

REV	DATE	BY	DESCRIPTION

SCALE GRAPHIC
DESIGNED BCH
DRAWN REJ
CHECKED BCH
DATE OCTOBER 2016

Haines Borough, Alaska

HAINES BOROUGH

HAINES 2016 WASTEWATER TREATMENT PLANT BUILDING UPGRADE

Carson Dorn Inc.
712 WEST 12TH STREET
JUNEAU, ALASKA 99801
(907) 586-4447

ENLARGED BOILER & ELECTRICAL ROOM LIGHTING, LUMINAIRE SCHEDULE

DRAWING E-11

SHEET No. 11 of 11

Plotted 10/28/2016 10:30 AM by Peggy Leslie F:\PROJECTS\127 CARSON DORN INC\143 HAINES WW TREATMENT PLANT\DRAWINGS\WORKING\E-11.DWG

SYMBOLS

CW	COLD WATER
V	VENT
W	WASTE, SOIL, DRAINAGE
HS	HEATING SUPPLY
HR	HEATING RETURN
OS	OIL SUCTION
OR	OIL RETURN
	ISOLATING GATE OR BALL VALVE
	CHECK VALVE
	UNION
1	FLOWSETTER W/NO.
	BALL VALVE
DV	DRAIN VALVE
	PITCHED DOWN
	REDUCER
	CAPPED OR PLUGGED
	STRAINER
CO	CLEANOUT
FCO	FLOOR CLEANOUT
	TEST PORT/PLUG
	WATER FEEDER/PRV
P-1	PUMP
	SAFETY OR RELIEF VALVE
7/M7.01	DETAIL REFERENCE
	CONTROL WIRING

	POINT OF CONNECTION OR REMOVAL
1	CONSTRUCTION NOTE
T	THERMOSTAT – IMMERSION, ROOM
V	VACUUM GAGE
	THERMOMETER
	PRESSURE GAGE
ø	DIAMETER
℄	CENTER LINE
B	BELOW GRADE
E	EXISTING
X	TO BE REMOVED
	CONCRETE WALL
	LINE BREAK

AAV	AUTOMATIC AIR VENT
AFF	ABOVE FINISHED FLOOR
AV	AUTOMATIC VALVE
CO	CLEANOUT
CU	COPPER
DU	DIELECTRIC UNION
DV	DRAIN VALVE
ET	EXPANSION TANK
EWT	ENTERING WATER TEMPERATURE
FCO	FLOOR CLEANOUT
FD	FLOOR DRAIN
FLV	FUSIBLE LINK VALVE
FS	FLOOR SINK
HB	HOSE BIBB
IEW	IN ELECTRICAL WORK
ICW	IN CIVIL WORK

LWCO	LOW WATER CUTOFF
LWT	LEAVING WATER TEMPERATURE
MBH	1,000 BTU PER HOUR
NIC	NOT IN CONTRACT
NIM	NOT IN MECHANICAL
P	PUMP
PRV	PRESSURE REDUCING VALVE
PSI	POUNDS PER SQUARE INCH
RI	ROUGH IN
TP	TRAP PRIMER
TYP	TYPICAL
UH	UNIT HEATER
VTR	VENT THROUGH ROOF

MECHANICAL SHEET LIST

NUMBER	TITLE
H-1	SYMBOLS & SCHEDULES
H-2	FLOOR PLAN
H-3	ENLARGED PLAN & PIPING DIAGRAMS
H-4	DETAILS & CONTROLS

GENERAL NOTES:

1. CODES & REGULATIONS: ALL WORK SHALL BE STRICTLY IN CONFORMANCE WITH APPLICABLE CODES AND REGULATIONS. ALL WORK SHALL BE IN ACCORDANCE WITH SPECIFICATIONS, DRAWINGS, THE 2012 INTERNATIONAL CODES, 2012 UNIFORM PLUMBING CODE, NFPA, AND STATE OF ALASKA MODIFICATIONS. ALL ELECTRICAL EQUIPMENT SHALL BEAR THE UL LABEL. ALL SHEET METAL WORK TO BE DONE IN ACCORDANCE WITH SMACNA REQUIREMENTS. PROVIDE ALL TESTING REQUIREMENTS FOR MECHANICAL SYSTEMS AS REQUIRED AND WITNESSED BY ADMINISTRATIVE AUTHORITY.
2. INSTALLATION OF PLUMBING SYSTEMS SHALL BE IN ACCORDANCE WITH CROSS CONNECTION REQUIREMENTS OF CHAPTER 6 OF UNIFORM PLUMBING CODE AND LOCAL REQUIREMENTS. ALL HOSE BIBBS IN DOMESTIC WATER SYSTEM SHALL HAVE VACUUM BREAKERS AND CAPS.
3. VENTILATION: MECHANICAL VENTILATION SHALL BE COVERED BY OTHERS AND IS NOT PART OF THESE DRAWINGS.
4. NOT ALL EXISTING ASBUILT MECHANICAL SYSTEMS ARE INCLUDED IN THESE DRAWINGS. VERIFY ALL CONDITIONS ONSITE.
5. THE MECHANICAL DESIGN SHOWN ON THE H SHEETS IS FOR NEW HEATING PLANT INSTALLATION. SEE OTHERS FOR TREATMENT PLANT MECHANICAL AND PIPING DESIGN.

BOILER ROOM EQUIPMENT SCHEDULE

EQUIPMENT	MANUFACTURER	MODEL	CAPACITY	FEATURES/CONTROLS/OPTIONS
BOILER B-1	WEIL MCLAIN	COMMERCIAL 480	344 NET MBH	CAST-IRON SECTIONAL BOILER, ATOMIZING BURNER. OPERATING THERMOSTAT CONTROL SET AT 190°F WITH 20°F DIFFERENTIAL, HIGH LIMIT WITH AUTO RESET THERMOSTAT, EXTRA HIGH LIMIT WITH MANUAL RESET THERMOSTAT, PRESSURE RELIEF VALVE, FLUE COLLAR WITH BREECHING DAMPER. SPARE PRESSURE RELIEF VALVE AND THERMOSTATS STORED IN MECHANICAL ROOM IN ORIGINAL PACKAGING. ALL CONTROLS TO BE IMMERSION TYPE WITH WELLS, STRAP-ON TYPE NOT ALLOWED. DATA REQUIRED.
BURNER	BECKET	CF500-W	1/3HP	115V, SINGLE-PHASE, FOR POSITIVE PRESSURE FIRE. ON/OFF FIRE. COMPLETE SET OF SPARE PARTS STORED IN MECHANICAL ROOM IN ORIGINAL PACKAGING CONSISTING OF FAN MOTOR, OIL PUMP, COUPLING, HONEYWELL 8184 PROGRAMMER, TRANSFORMER, FLAME DETECTOR, SOLENOID VALVE, PRE-PURGE, COMPLETE SET OF ELECTRODES, AND LIST OF SPARE PARTS. DATA REQUIRED.
CHIMNEY	SCHEBLER	P2	8"ø	POSITIVE PRESSURE RATED CHIMNEY STACK. DOUBLE WALL SS LINER CONSTRUCTION. ROOF THIMBLE, RAIN RESISTANT CAP, WALL BRACKETS, GUY SECTION, CLEANOUT TEE WITH DRAIN CONNECTION. INTERIOR AND EXTERIOR STAINLESS STEEL CONSTRUCTION. PROVIDE SHOP DRAWINGS. INSTALL PER MANUFACTURER REQUIREMENTS.
PUMP, P-1	TACO	0012 IFC	1/6HP	PIPE-MOUNTED 3-SPEED PUMP. CERAMIC SHAFT AND BEARINGS. SELF LUBRICATING. STAINLESS STEEL CONSTRUCTION. INTEGRAL FLOW CHECK. 1-1/2" FLANGED CONNECTIONS WITH TEST PORTS. 17 GPM AT 10 FT HEAD, AT MEDIUM SPEED. 115V, SINGLE PHASE.
PUMP, P-2	TACO	0012 IFC	1/6HP	PIPE-MOUNTED 3-SPEED PUMP. CERAMIC SHAFT AND BEARINGS. SELF LUBRICATING. STAINLESS STEEL CONSTRUCTION. INTEGRAL FLOW CHECK. 1-1/2" FLANGED CONNECTIONS WITH TEST PORTS. 17 GPM AT 10 FT HEAD, AT MEDIUM SPEED. 115V, SINGLE PHASE.
OIL TANK OT-1			1000GALLON	DOUBLE WALL ABOVE GROUND TANK
EXPANSION TANK ET-1	AMTROL	EXTROL AX-40V	11.3 GALLON ACCEPTANCE VOLUME	ASME. DIAPHRAM TYPE. VERTICAL FLOOR STANDING MODEL.
FLOOR DRAIN FD-1	SIOUX	CHIEF 822	–	NICKEL BRONZE BODY WITH DOUBLE DRAINAGE FLANGE, WEEP HOLES, REVERSIBLE CLAMPING COLLAR, AND ROUND, ADJUSTABLE NICKEL-BRONZE 6 INCH DIAMETER STRAINER WITH SQUARE HOLES. WITH PRIMING LINE CONNECTION. FD 2" WASTE CONNECTION.
FLOOR SINK FS-1	SIOUX	CHIEF	–	4"x8" PORCELAIN ENAMEL INTERIOR WITH SECONDARY STRAINER. 2" OUTLET. 4" SUMP DEPTH. TRAP PRIMER CONNECTION.
UNIT HEATER (2) UH-1	TRANE	S-240	174MBH AT 200F EWT	HEAVY DUTY CONSTRUCTION, HORIZONTAL BLOW. 4-WAY ADJUSTABLE VANES. UNIT PROVIDED WITH DISCONNECT. ELECTRICAL REQUIREMENT: 1/3HP, 120V, 1-PHASE.

FLOWSETTER SCHEDULE

NO.	SYSTEM SERVED	GPM	SIZE (INCHES)
1	P-1	17	1-1/2
2	P-2	17	1-1/2

REV	DATE	BY	DESCRIPTION

SCALE GRAPHIC
DESIGNED SB
DRAWN KB
CHECKED DM
DATE OCT 19, 2016

Haines Borough, Alaska

HAINES BOROUGH

HAINES 2016 WASTEWATER TREATMENT PLANT BUILDING UPGRADE

STATE OF ALASKA — 49TH — COLLIN H. MURRAY — ANCHORAGE, ME 7870 — ELECTRICAL PROFESSIONAL ENGINEER
ISSUE DATE: 10/19/2016

PDC INC. ENGINEERS
M&A
PLAN PREPARED BY:
MURRAY & ASSOCIATES, P. C.
CONSULTING ENGINEERS
ALASKA LICENSE #AECC750
MURRAYPC.COM
P O BOX 21081
JUNEAU, ALASKA 99802
TEL: 907 780-6151
FAX: 907 780-6182

SYMBOLS & SCHEDULES

DRAWING H-1

SHEET No. 1 of 4

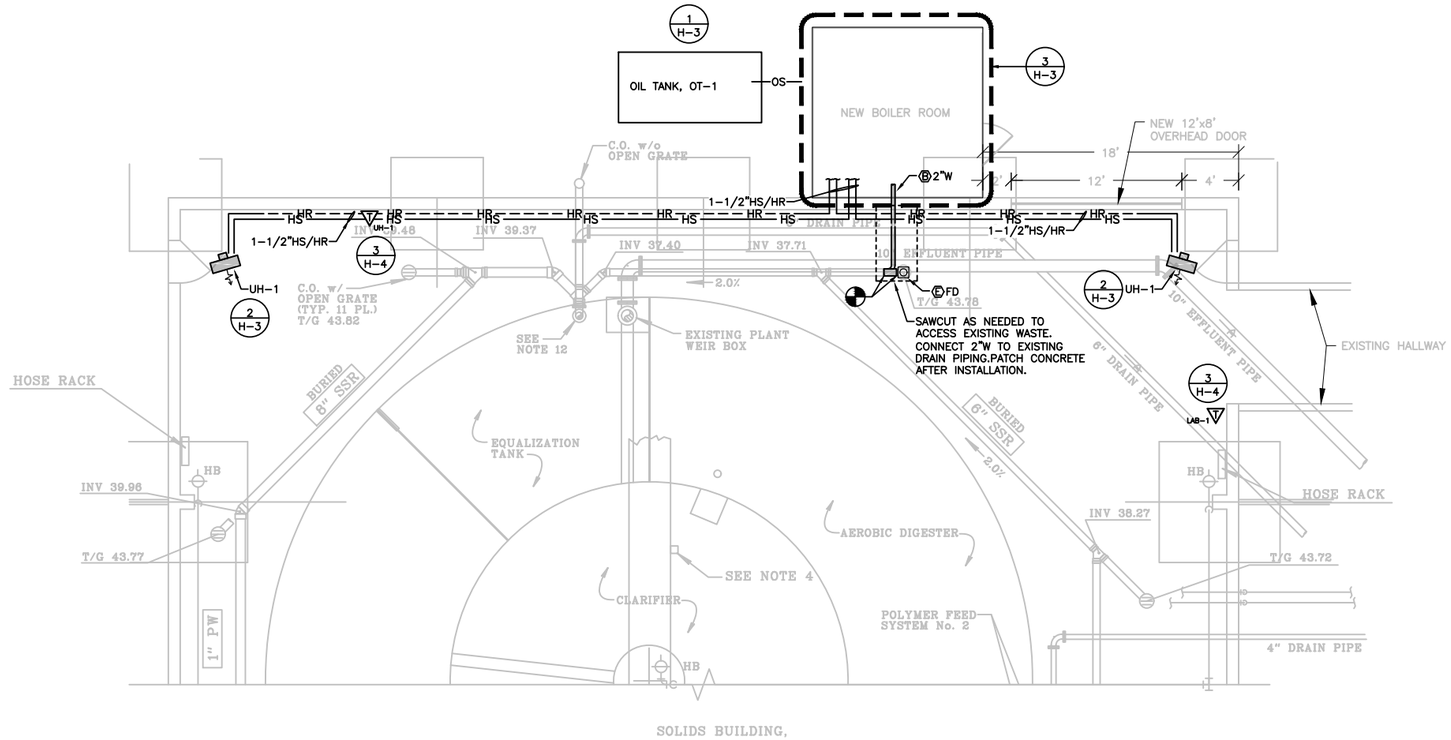

1 **FLOOR PLAN**

SCALE: 0 2' 4' 8' 16'

PROJECT NORTH

REV	DATE	BY	DESCRIPTION

SCALE GRAPHIC
DESIGNED SB
DRAWN KB
CHECKED DM
DATE OCT 19, 2016

Haines Borough, Alaska

HAINES BOROUGH

HAINES 2016 WASTEWATER TREATMENT PLANT BUILDING UPGRADE

STATE OF ALASKA
49TH
DOUGLAS H. MURRAY
ME 7870
ELECTRICAL PROFESSIONAL ENGINEER
ISSUE DATE: 10/19/2016

PDC INC. ENGINEERS

PLAN PREPARED BY:
MURRAY & ASSOCIATES, P. C.
CONSULTING ENGINEERS
ALASKA LICENSE #AECC750
MURRAYPC.COM
P O BOX 21081
JUNEAU, ALASKA 99802
TEL: 907 780-6151
FAX: 907 780-6182

FLOOR PLAN

DRAWING
H-2

SHEET No.
2 of 4

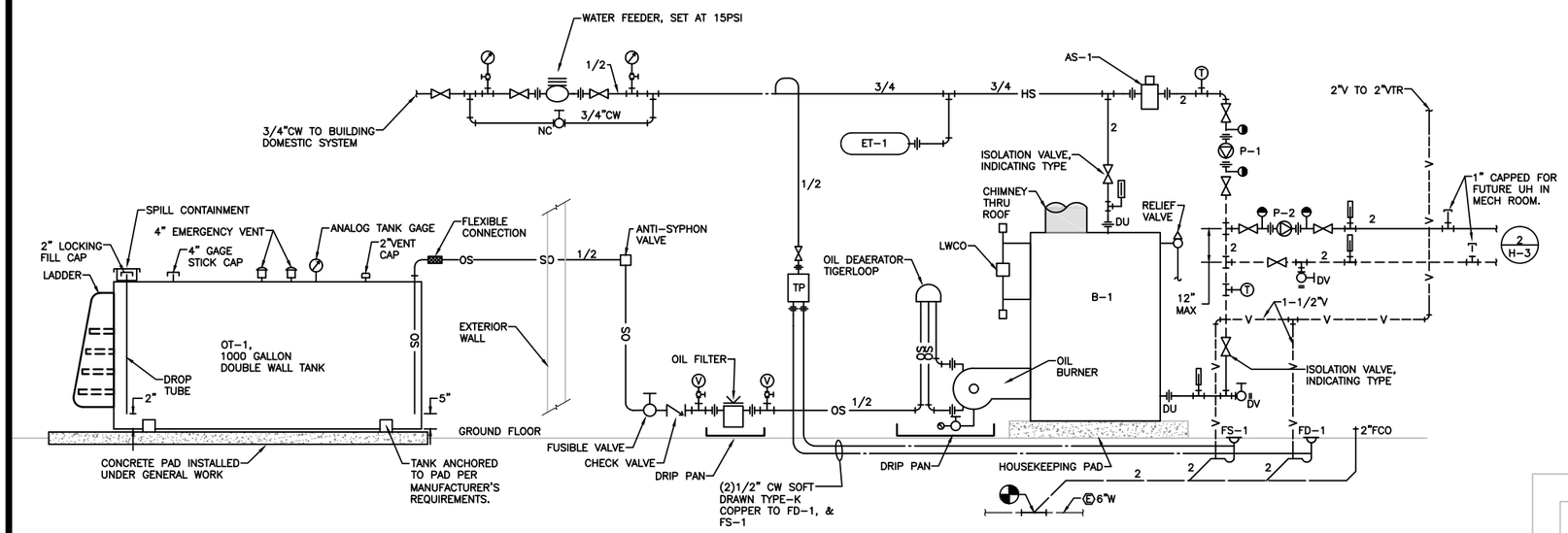

1 BOILER ROOM PIPING DIAGRAM

NO SCALE

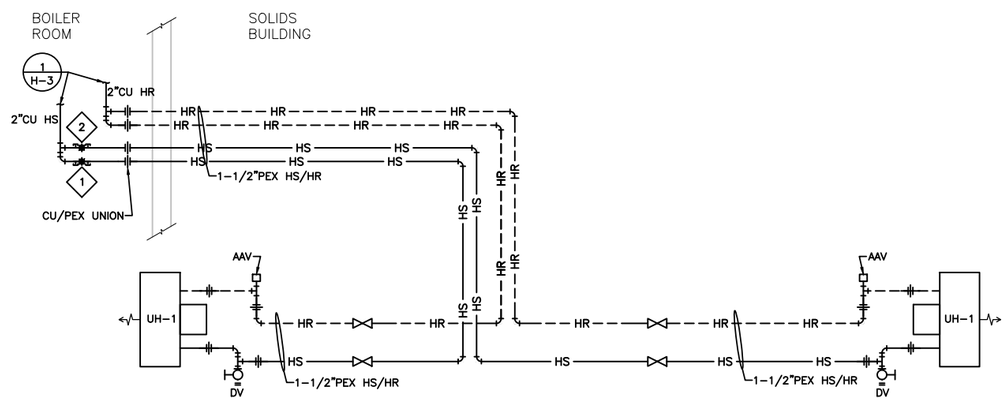

2 SOLIDS BUILDING PIPING DIAGRAM

NO SCALE

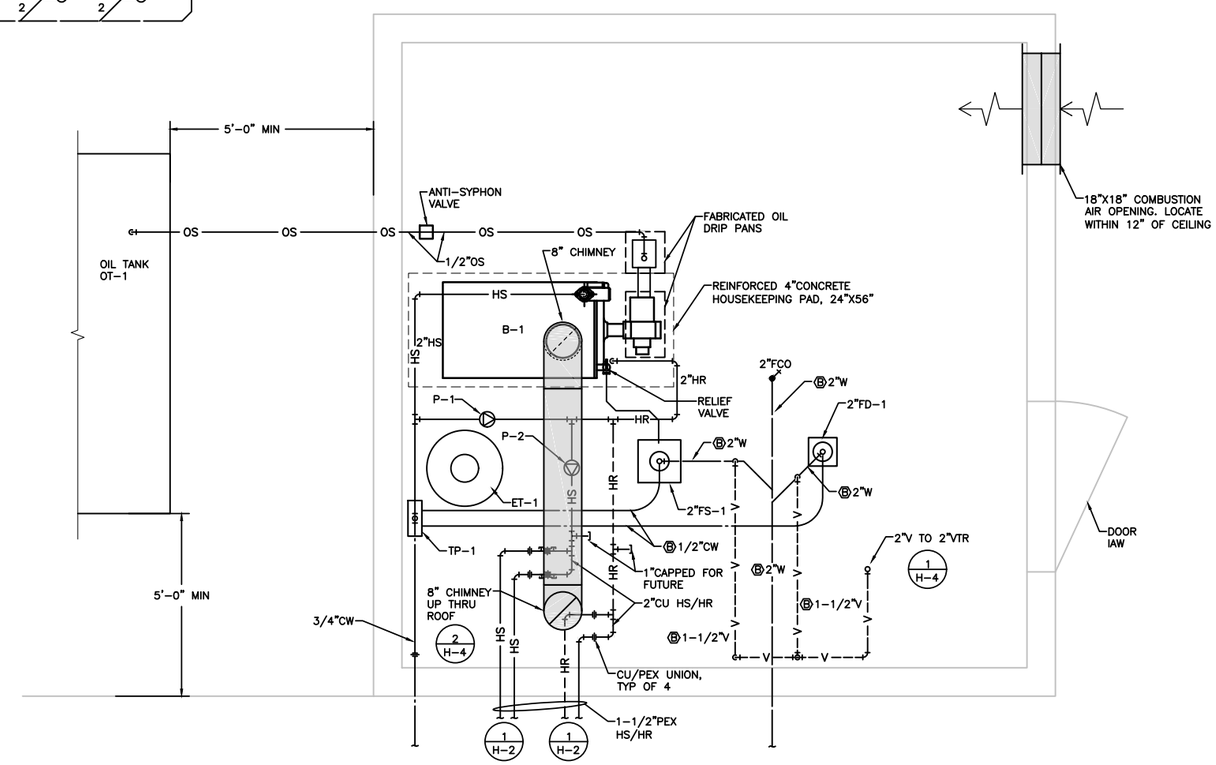

3 ENLARGED BOILER ROOM PLAN

SCALE: 0 6" 1' 2' 4'

PROJECT NORTH

REV	DATE	BY	DESCRIPTION

SCALE GRAPHIC
DESIGNED SB
DRAWN KB
CHECKED DM
DATE OCT 19, 2016

Haines Borough, Alaska

HAINES BOROUGH

HAINES 2016 WASTEWATER TREATMENT PLANT BUILDING UPGRADE

STATE OF ALASKA — DOUGLAS H. MURRAY — ME 7870 — REGISTERED PROFESSIONAL ENGINEER — ISSUE DATE: 10/19/2016

PDC INC. ENGINEERS

PLAN PREPARED BY:
MURRAY & ASSOCIATES, P. C.
CONSULTING ENGINEERS
ALASKA LICENSE #AECC750
MURRAYPC.COM
P O BOX 21081
JUNEAU, ALASKA 99802
TEL: 907 780-6151
FAX: 907 780-6182

ENLARGED PLAN & PIPING DIAGRAMS

DRAWING H-3

SHEET No. 3 of 4

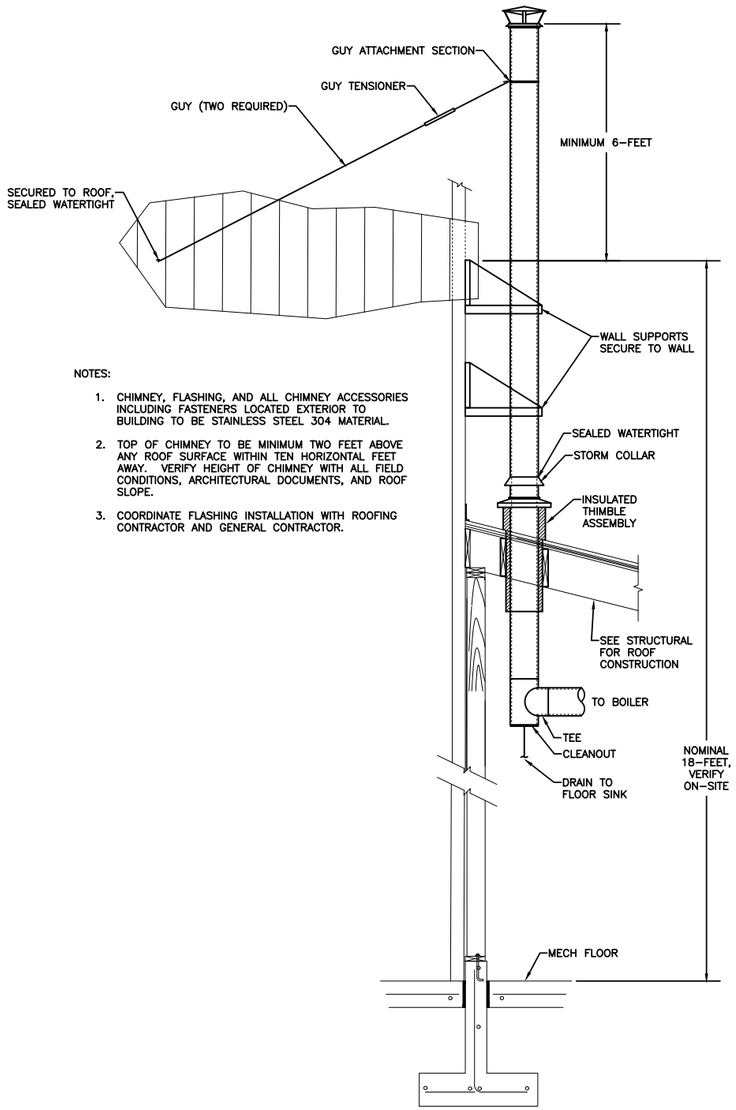

NOTES:

1. CHIMNEY, FLASHING, AND ALL CHIMNEY ACCESSORIES INCLUDING FASTENERS LOCATED EXTERIOR TO BUILDING TO BE STAINLESS STEEL 304 MATERIAL.
2. TOP OF CHIMNEY TO BE MINIMUM TWO FEET ABOVE ANY ROOF SURFACE WITHIN TEN HORIZONTAL FEET AWAY. VERIFY HEIGHT OF CHIMNEY WITH ALL FIELD CONDITIONS, ARCHITECTURAL DOCUMENTS, AND ROOF SLOPE.
3. COORDINATE FLASHING INSTALLATION WITH ROOFING CONTRACTOR AND GENERAL CONTRACTOR.

2 CHIMNEY VENT THROUGH ROOF DETAILS

NO SCALE

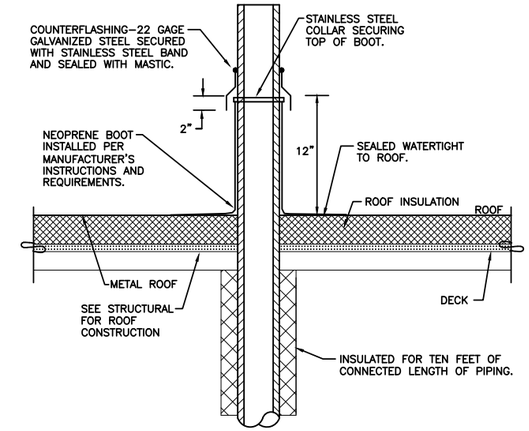

1 VENT THROUGH ROOF DETAILS

NO SCALE

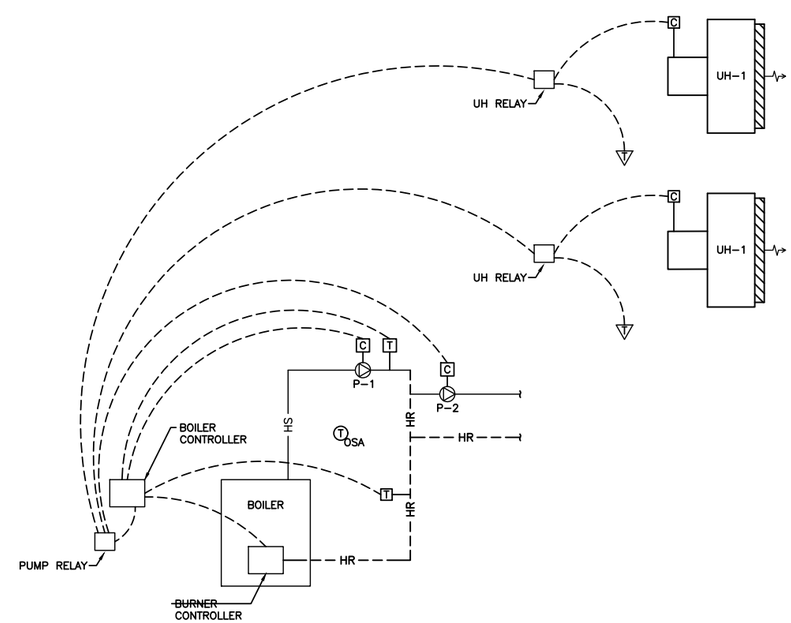

3 HEATING CONTROLS DIAGRAM

NO SCALE

CONTROLS LEGEND

C	CONTACTOR	B-1	BOILER
T	IMMERSION THERMOSTAT OR THERMOSTATIC SENSOR	COM	COMMON
	PUMP	HR	HEATING RETURN
	ROOM THERMOSTAT	HS	HEATING SUPPLY
	AIR DIRECTION	P-1	PUMP
	THERMOMETER	TYP	TYPICAL
M	MOTOR	UH	UNIT HEATER
$	CONTROL SWITCH		

REV	DATE	BY	DESCRIPTION

SCALE GRAPHIC
DESIGNED SB
DRAWN KB
CHECKED DM
DATE OCT 19, 2016

Haines Borough, Alaska

HAINES BOROUGH

HAINES 2016 WASTEWATER TREATMENT PLANT BUILDING UPGRADE

STATE OF ALASKA 49TH ELECTRICAL PROFESSIONAL ENGINEER COOPER H. MURRAY ME 7870 ISSUE DATE: 10/19/2016

PDC INC. ENGINEERS

M&A

PLAN PREPARED BY:
MURRAY & ASSOCIATES, P. C.
CONSULTING ENGINEERS
ALASKA LICENSE #AECC750
MURRAYPC.COM

P O BOX 21081
JUNEAU, ALASKA 99802

TEL: 907 780-6151
FAX: 907 780-6182

DETAILS & CONTROLS

DRAWING H-4

SHEET No. 4 of 4