LUTAK DOCK

BARGE RAMP RENOVATION AND REPLACEMENT CONCEPTS

HAINES, ALASKA

JANUARY 2018 FINAL SET

MAYOR
JANICE HILL

DIRECTOR OF PUBLIC FACILITIES
BRAD RYAN

HARBORMASTER
SHAWN BELL

Designed By:
R&M CONSULTANTS, INC.
9101 Vanguard Drive
Anchorage, Alaska 99507
rmconsult.com• email@rmconsult.com
phone: 907.522.1707 • fax: 907.522.3403
CORPORATE AUTHORIZATION NUMBER AECC111

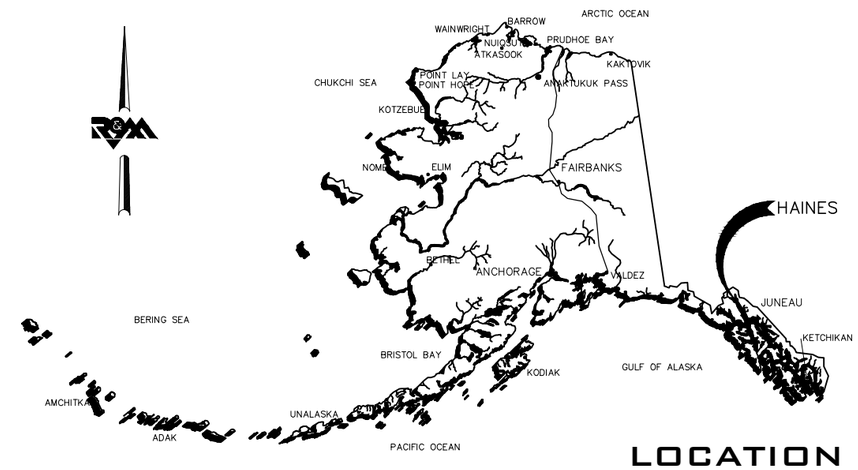

LOCATION

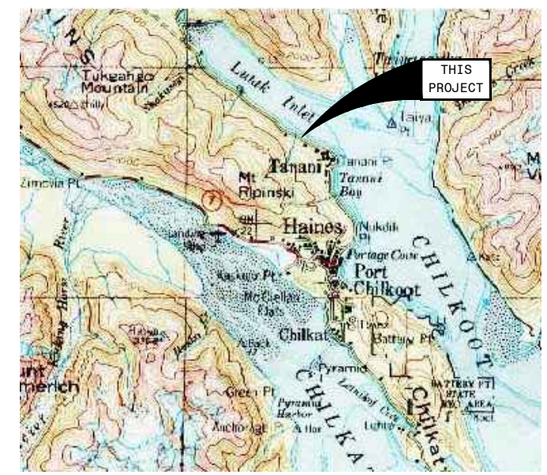

VICINITY

INDEX OF DRAWINGS

SHT	TITLE
G1.0	COVER
G2.0	EXISTING SITE PLAN
G3.0	EXISTING SITE PHOTOS
C1.1	BARGE RAMP SITE PLAN OPTION 1
C1.2	BARGE RAMP SITE PLAN OPTION 2
C1.3	BARGE RAMP SITE PLAN OPTION 3
C1.4	DECK TRUSS AND TRANSFER BRIDGE
C1.5	TRANSFER BRIDGE DETAILS
C1.6	3 PILE DOLPHIN
C1.7	4 PILE DOLPHIN

INDEX

Z:\project\2573.01 HAINES B Lutak Dock RORO Condition Report\Civil\ACAD\2573.01 – G1.0 Cover Sheet.dwg
Plotted 1/17/2018 3:41 PM by Jean Cumlat

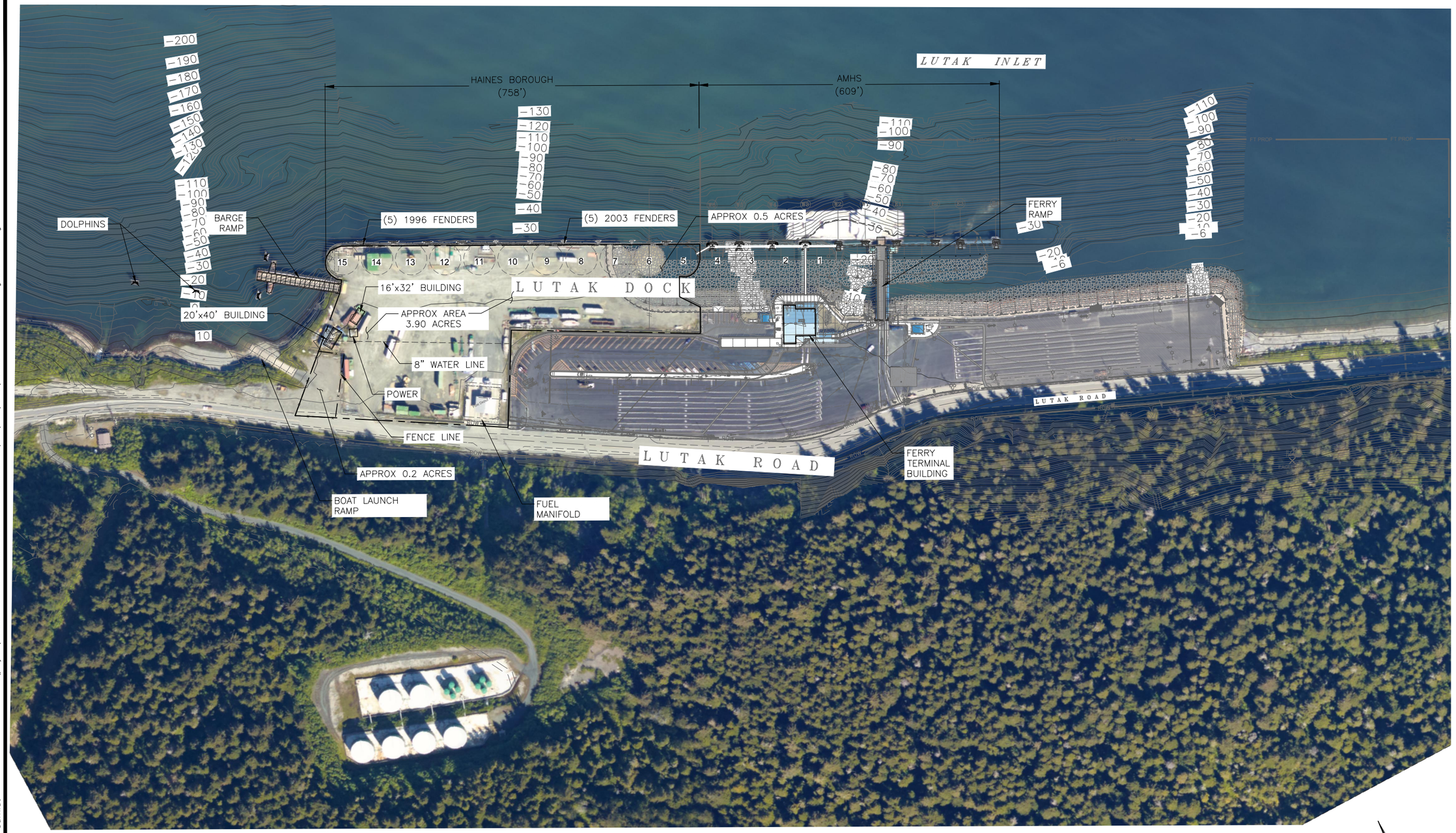

1 **EXISTING SITE PLAN**

Scale: 1" = 100'

0 100 200
FEET

PROGRESS SET
NOT FOR
CONSTRUCTION

R&M CONSULTANTS, INC.
9101 Vanguard Drive
Anchorage, Alaska 99507
rmconsult.com• email@rmconsult.com
phone: 907.522.1707 • fax: 907.522.3403
CORPORATE AUTHORIZATION NUMBER AECC111

Haines Borough
LUTAK DOCK BARGE RAMP

No.	Description	Date

Drawn By: JVC
Checked By: JD/DA
Date: JANUARY 2018
Phase: PRELIMINARY
Project No: 2573.01
SHEET TITLE: EXISTING SITE PLAN

SHEET NO: 2 OF 10

G2.0

Z:\project\2573.01 HAINES B Lutak Dock RORO Condition Report\Civil\ACAD\2573.01 – G2.0 Existing Site Plan.dwg
Plotted 1/17/2018 3:44 PM by Jean Cumlat

TRANSFER BRIDGE

UNDERSIDE TRANSFER BRIDGE

END OF TRANSFER BRIDGE

TRANSFER BRIDGE ABUTMENT

FLOAT DOLPHINS

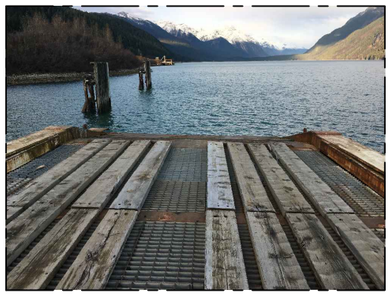

TRANSFER BRIDGE DECKING

SIDE TIE DOLPHINS

FLOAT UNDERSIDE TRANSFER BRIDGE

LAUNCH RAMP

NORTH END BERTH DOLPHIN

SOUTH END BERTH DOLPHIN

WEST SIDE TIE DOLPHIN

MARINE GROWTH ON FENDER PANELS

TRANSFER BRIDGE BEARINGS

UPLANDS AT TRANSFER BRIDGE

1 EXISTING SITE PHOTOS

PROGRESS SET NOT FOR CONSTRUCTION

R&M CONSULTANTS, INC.
9101 Vanguard Drive
Anchorage, Alaska 99507
rmconsult.com• email@rmconsult.com
phone: 907.522.1707 • fax: 907.522.3403
CORPORATE AUTHORIZATION NUMBER AECC111

Haines Borough
LUTAK DOCK BARGE RAMP

No.	Description	Date

Drawn By: JVC
Checked By: JD/DA
Date: JANUARY 2018
Phase: PRELIMINARY
Project No: 2573.01
SHEET TITLE: EXISTING SITE PHOTOS
SHEET NO: 3 OF 10
G3.0

Z:\project\2573.01 HAINES B Lutak Dock RORO Condition Report\Civil\ACAD\2573.01 – G3.0 Existing Site Photos.dwg
Plotted 1/17/2018 3:45 PM by Jean Cumlat

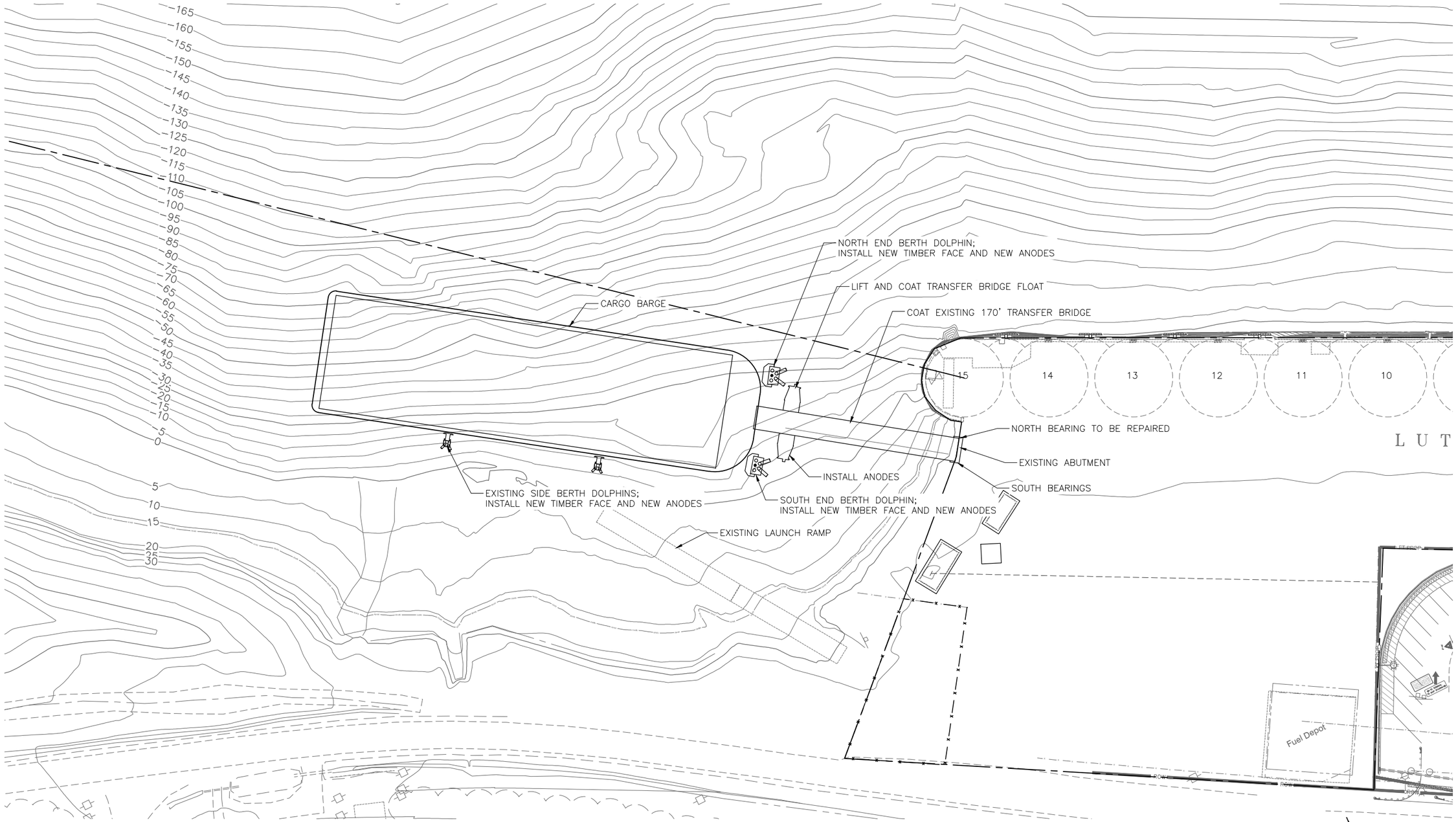

1 **BARGE RAMP SITE PLAN OPTION 1**
RENOVATE EXISITNG
Scale: 1" = 40'

PROGRESS SET
NOT FOR
CONSTRUCTION

R&M CONSULTANTS, INC.
9101 Vanguard Drive
Anchorage, Alaska 99507
rmconsult.com• email@rmconsult.com
phone: 907.522.1707 • fax: 907.522.3403
CORPORATE AUTHORIZATION NUMBER AECC111

Haines Borough
LUTAK DOCK BARGE RAMP

No.	Description	Date

Drawn By: JVC
Checked By: JD/DA
Date: JANUARY 2018
Phase: PRELIMINARY
Project No: 2573.01
SHEET TITLE: BARGE RAMP SITE PLAN

SHEET NO: 4 OF 10
C1.1

Z:\project\2573.01 HAINES B Lutak Dock RORO Condition Report\Civil\ACAD\2573.01 – C1.1 – Barge Ramp Site Plan Option 1.dwg
Plotted 1/17/2018 3:46 PM by Jean Cumlat

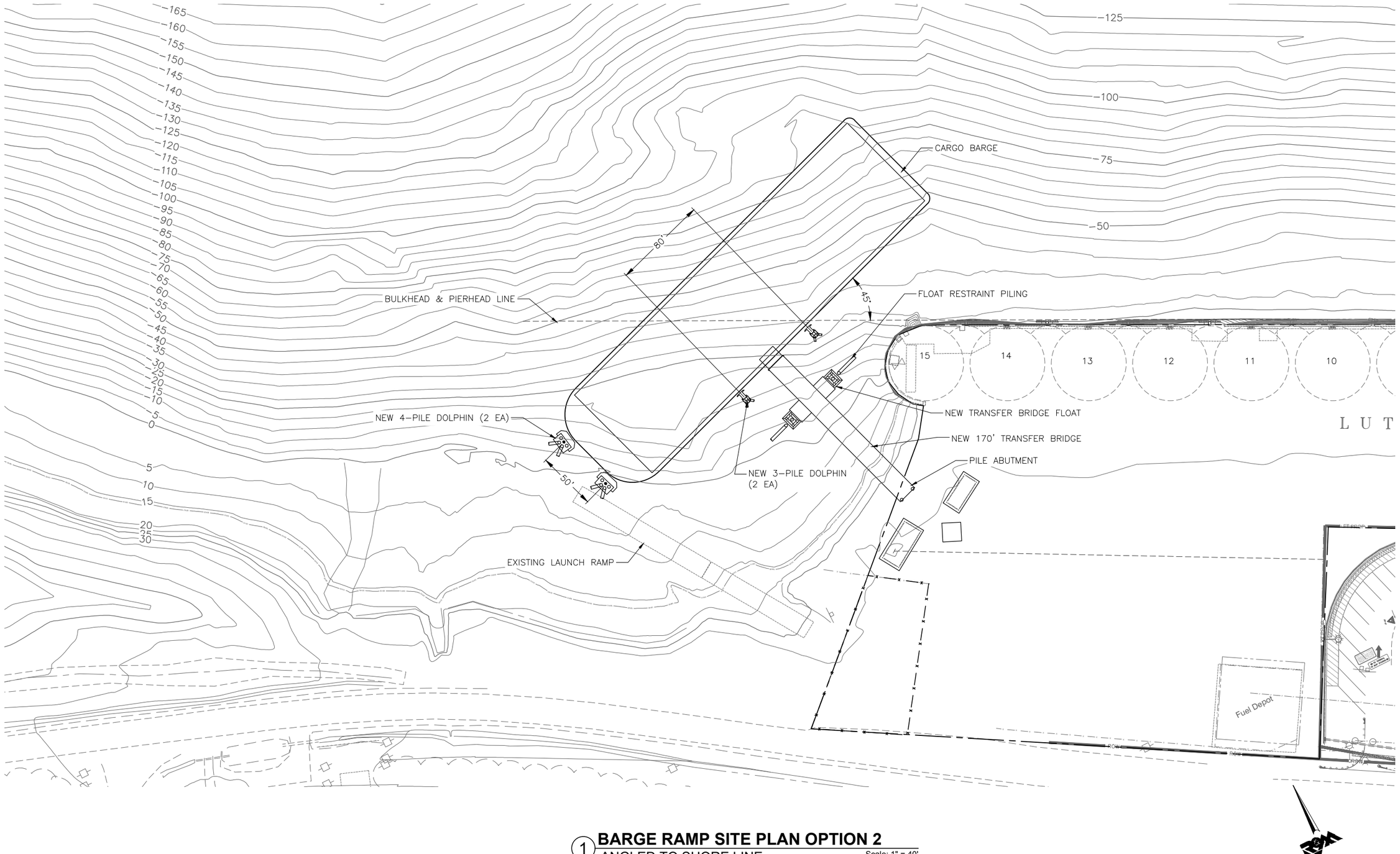

1 **BARGE RAMP SITE PLAN OPTION 2**
ANGLED TO SHORE LINE
Scale: 1" = 40'

PROGRESS SET NOT FOR CONSTRUCTION

R&M CONSULTANTS, INC.
9101 Vanguard Drive
Anchorage, Alaska 99507
rmconsult.com• email@rmconsult.com
phone: 907.522.1707 • fax: 907.522.3403
CORPORATE AUTHORIZATION NUMBER AECC111

Haines Borough
LUTAK DOCK BARGE RAMP

No.	Description	Date

Drawn By: JVC
Checked By: JD/DA
Date: JANUARY 2018
Phase: PRELIMINARY
Project No: 2573.01
SHEET TITLE: BARGE RAMP SITE PLAN
SHEET NO: 5 OF 10
C1.2

Z:\project\2573.01 HAINES B Lutak Dock RORO Condition Report\Civil\ACAD\2573.01 – C1.2 – Barge Ramp Site Plan Option 2.dwg
Plotted 1/17/2018 3:47 PM by Jean Cumlat

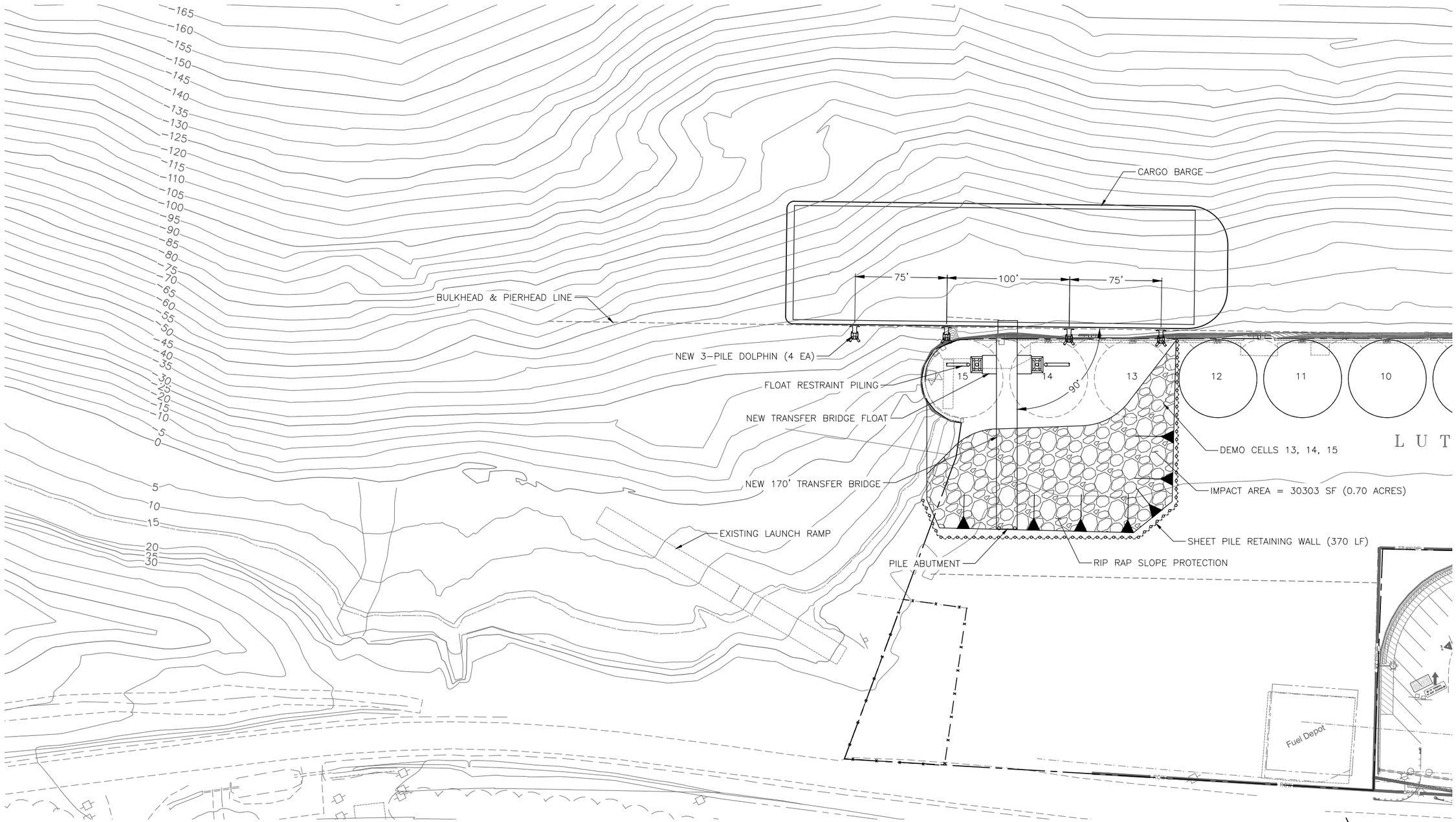

1 BARGE RAMP SITE PLAN OPTION 3

PARALLEL TO SHORE LINE

Scale: 1" = 40'

PROGRESS SET NOT FOR CONSTRUCTION

R&M CONSULTANTS, INC.
9101 Vanguard Drive
Anchorage, Alaska 99507
rmconsult.com• email@rmconsult.com
phone: 907.522.1707 • fax: 907.522.3403
CORPORATE AUTHORIZATION NUMBER AECC111

Haines Borough

LUTAK DOCK BARGE RAMP

HAINES BOROUGH ALASKA

No.	Description	Date

Drawn By: JVC
Checked By: JD/DA
Date: JANUARY 2018
Phase: PRELIMINARY
Project No: 2573.01
SHEET TITLE: BARGE RAMP SITE PLAN

SHEET NO: 6 OF 10

C1.3

Z:\project\2573.01 HAINES B Lutak Dock RORO Condition Report\Civil\ACAD\2573.01 – C1.3 – Barge Ramp Site Plan Option 3.dwg
Plotted 1/17/2018 3:49 PM by Jean Cumlat

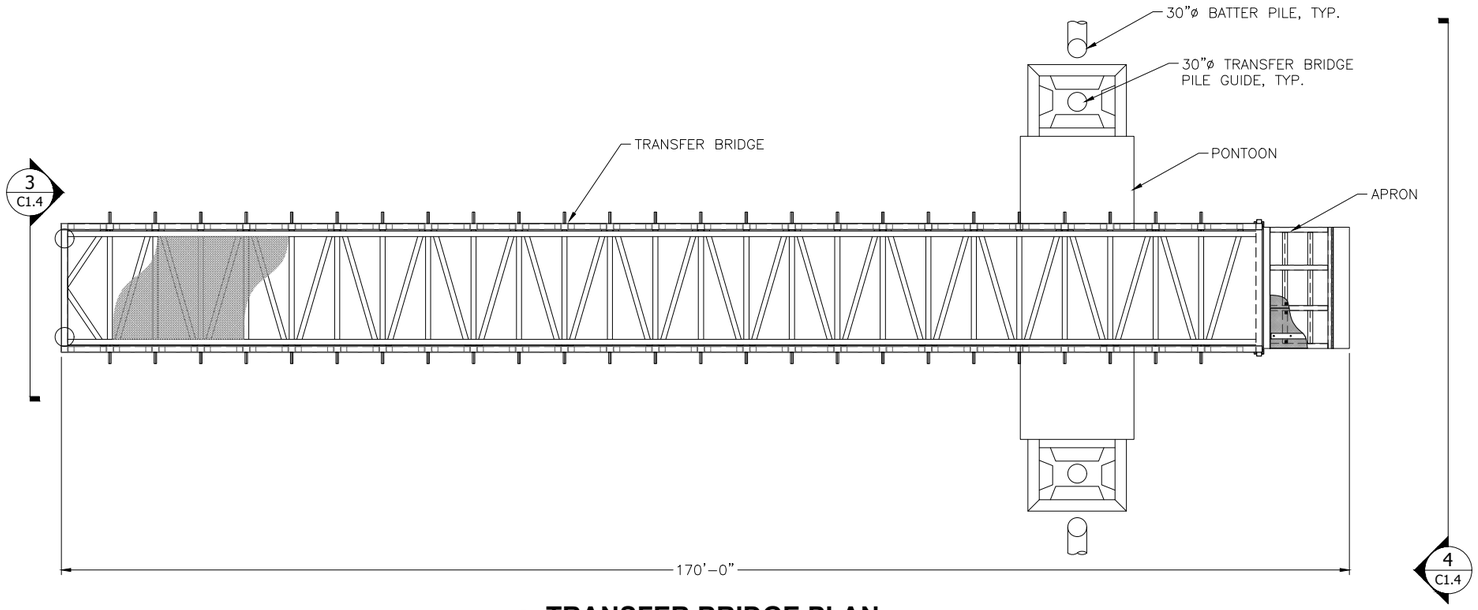

1 **TRANSFER BRIDGE PLAN**
Scale: 1" = 10'

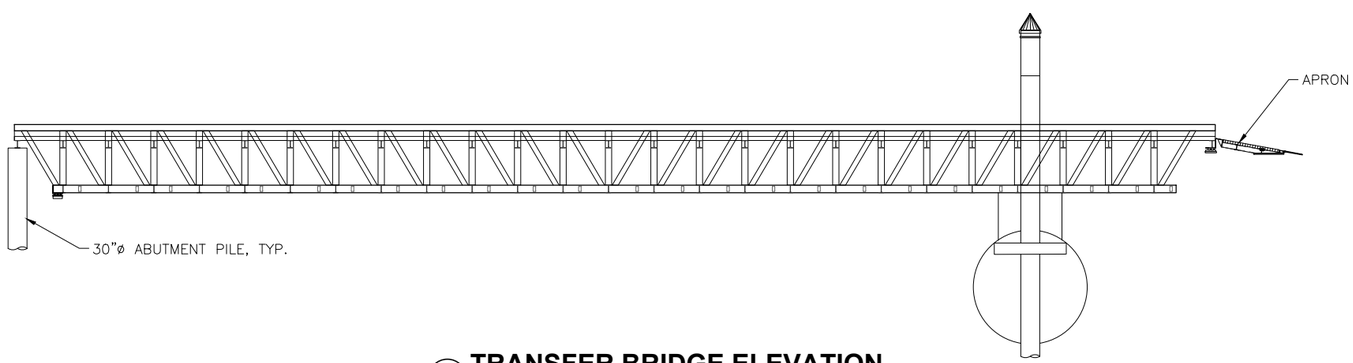

2 **TRANSFER BRIDGE ELEVATION**
Scale: 1" = 10'

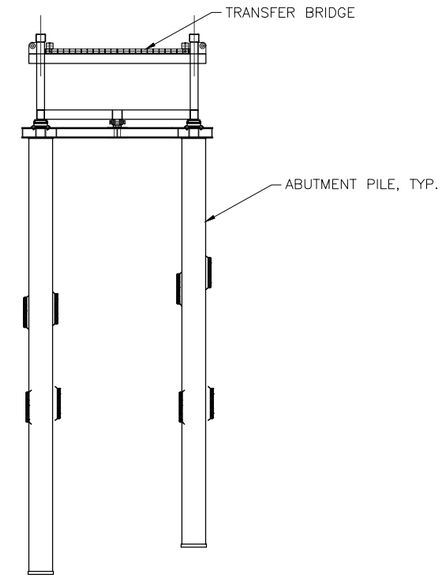

3 **ABUTMENT ELEVATION**
Scale: 1" = 8"

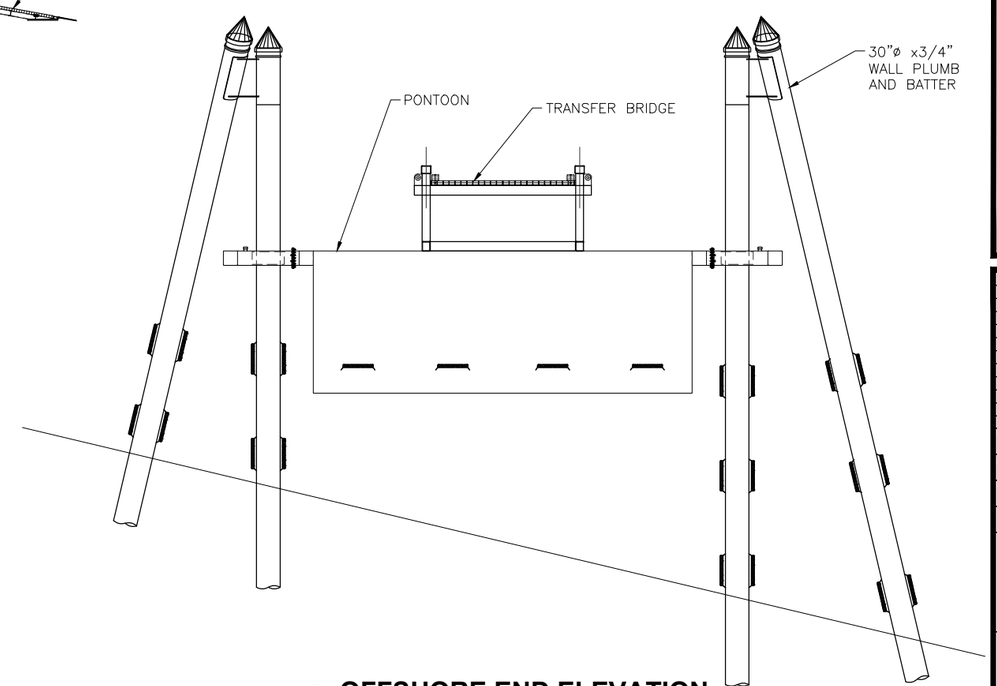

4 **OFFSHORE END ELEVATION**
Scale: 1" = 8'

PROGRESS SET NOT FOR CONSTRUCTION

R&M CONSULTANTS, INC.
9101 Vanguard Drive
Anchorage, Alaska 99507
rmconsult.com• email@rmconsult.com
phone: 907.522.1707 • fax: 907.522.3403
CORPORATE AUTHORIZATION NUMBER AECC111

Haines Borough
LUTAK DOCK BARGE RAMP

No.	Description	Date

Drawn By: JVC
Checked By: JD/DA
Date: JANUARY 2018
Phase: PRELIMINARY
Project No: 2573.01
SHEET TITLE: BARGE RAMP, DECK TRUSS AND TRANSFER BRIDGE
SHEET NO: 7 OF 10
C1.4

Z:\project\2573.01 HAINES B Lutak Dock RORO Condition Report\Civil\ACAD\2573.01 – C1.4 – Barge Ramp Details.dwg
Plotted 1/17/2018 3:49 PM by Jean Cumlat

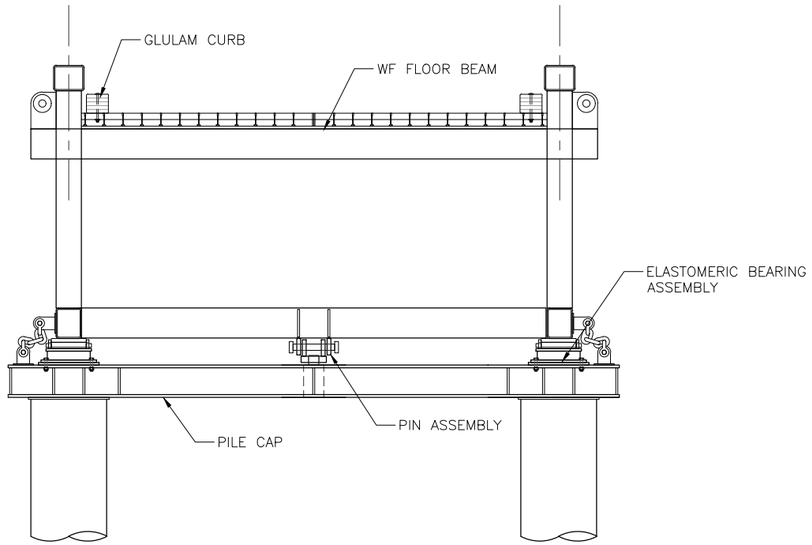

1 **BRIDGE SECTION AT APPROACH**
Scale: 1:30

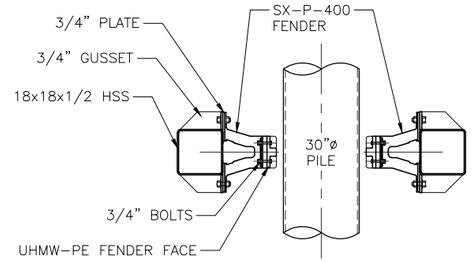

SECTION AT 30" PILE
Scale: 1:30

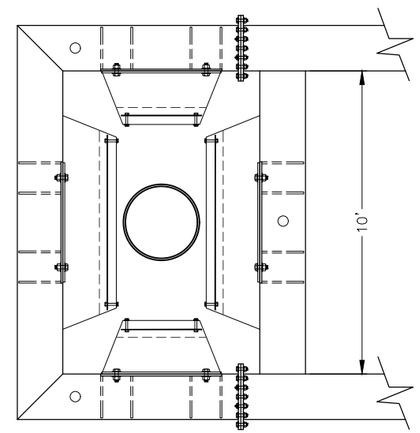

EXTERIOR PILE COLLAR
Scale: 1:30

2 **EXTERIOR PILE COLLAR DETAIL**
Scale: 1:30

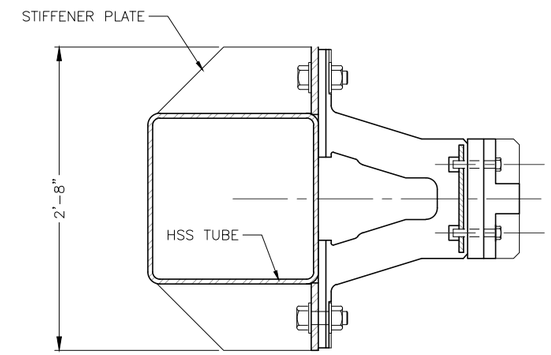

3 **CONNECTION AT SX-P FENDER**
Scale: 1:8

PROGRESS SET NOT FOR CONSTRUCTION

R&M CONSULTANTS, INC.
9101 Vanguard Drive
Anchorage, Alaska 99507
rmconsult.com• email@rmconsult.com
phone: 907.522.1707 • fax: 907.522.3403
CORPORATE AUTHORIZATION NUMBER AECC111

Haines Borough
LUTAK DOCK BARGE RAMP

No.	Description	Date

Drawn By: JVC
Checked By: JD/DA
Date: JANUARY 2018
Phase: PRELIMINARY
Project No: 2573.01
SHEET TITLE: BARGE RAMP - DETAILS
SHEET NO: 8 OF 10
C1.5

Z:\project\2573.01 HAINES B Lutak Dock RORO Condition Report\Civil\ACAD\2573.01 - C1.4 - Barge Ramp Details.dwg
Plotted 1/17/2018 3:50 PM by Jean Cumlat

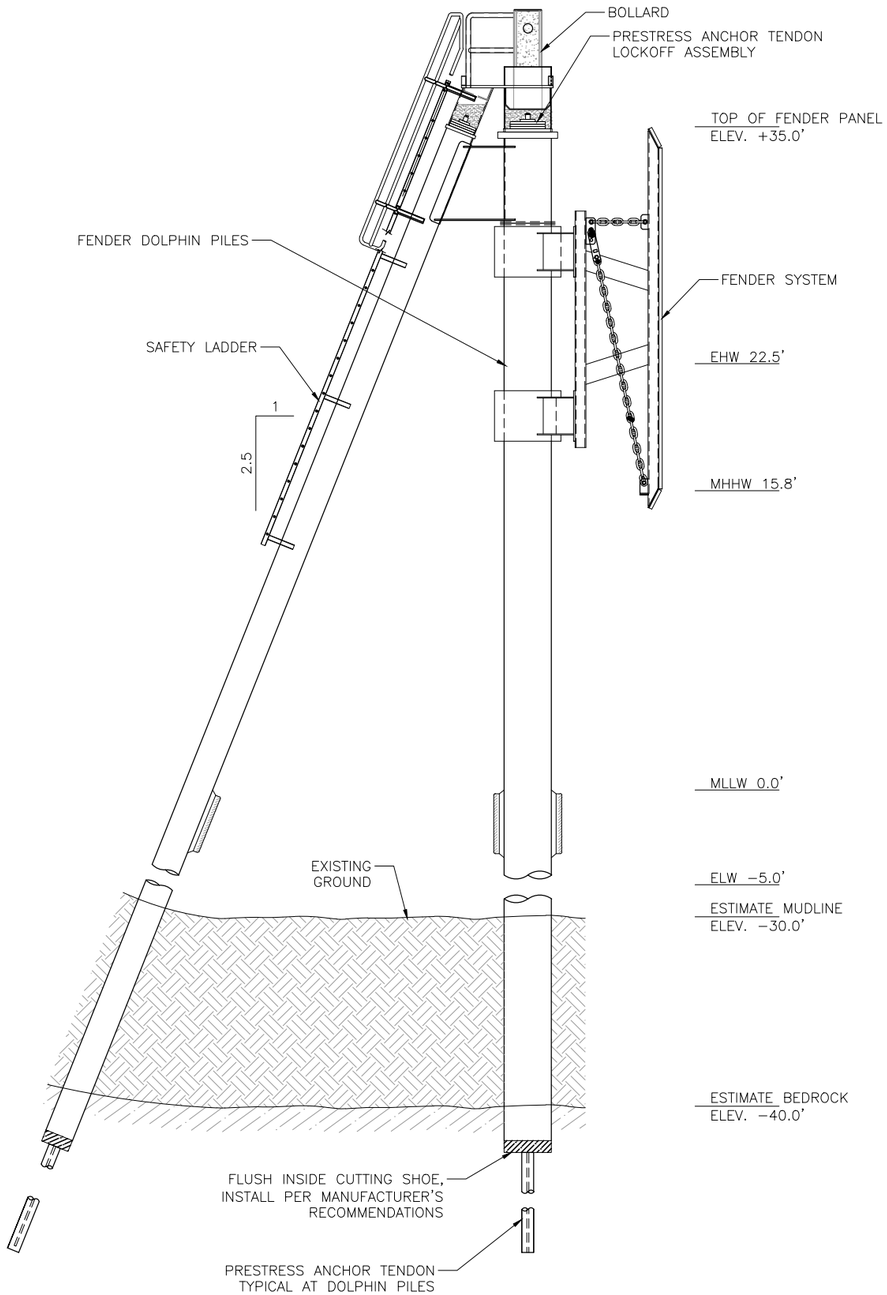

1 3 PILE DOLPHIN ELEVATION

Scale: NTS

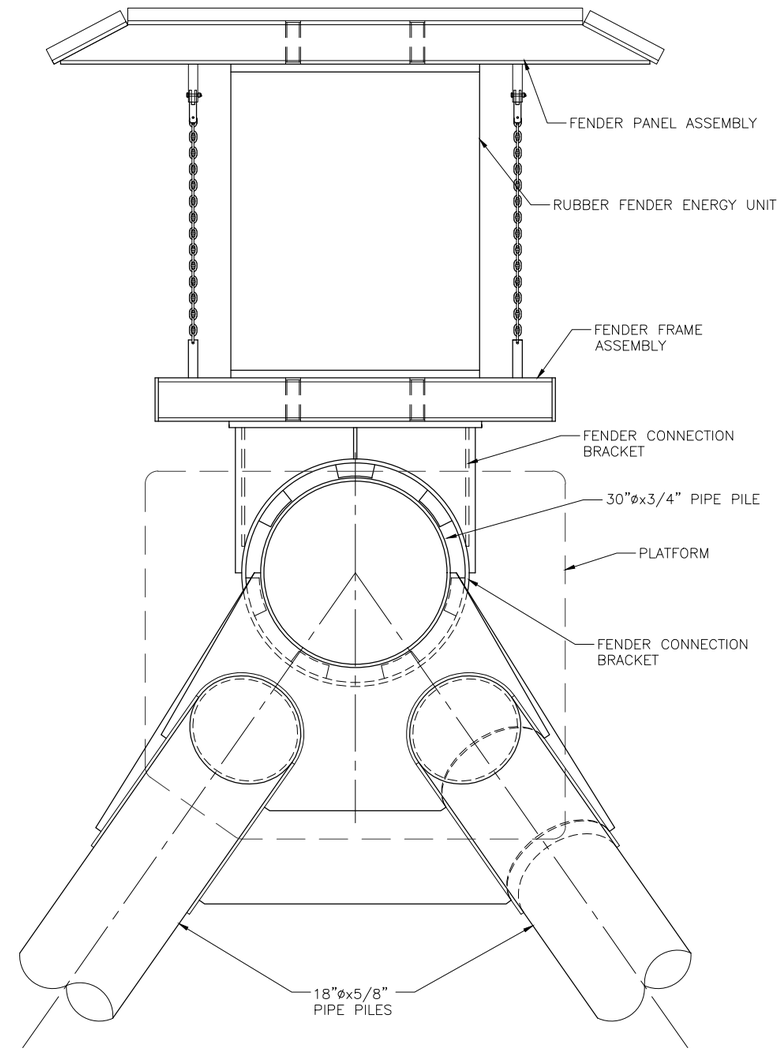

2 3 PILE DOLPHIN PLAN

Scale: 1" = 1'-0"

PROGRESS SET NOT FOR CONSTRUCTION

R&M CONSULTANTS, INC.
9101 Vanguard Drive
Anchorage, Alaska 99507
rmconsult.com• email@rmconsult.com
phone: 907.522.1707 • fax: 907.522.3403
CORPORATE AUTHORIZATION NUMBER AECC111

Haines Borough
LUTAK DOCK BARGE RAMP

No.	Description	Date

Drawn By: JVC
Checked By: JD/DA
Date: JANUARY 2018
Phase: PRELIMINARY
Project No: 2573.01
SHEET TITLE: 3 PILE DOLPHIN
SHEET NO: 9 OF 10
C1.6

Z:\project\2573.01 HAINES B Lutak Dock RORO Condition Report\Civil\ACAD\2573.01 – C1.6 – 3 Pile Dolphin Plan & Elevation.dwg
Plotted 1/17/2018 3:51 PM by Jean Cumlat

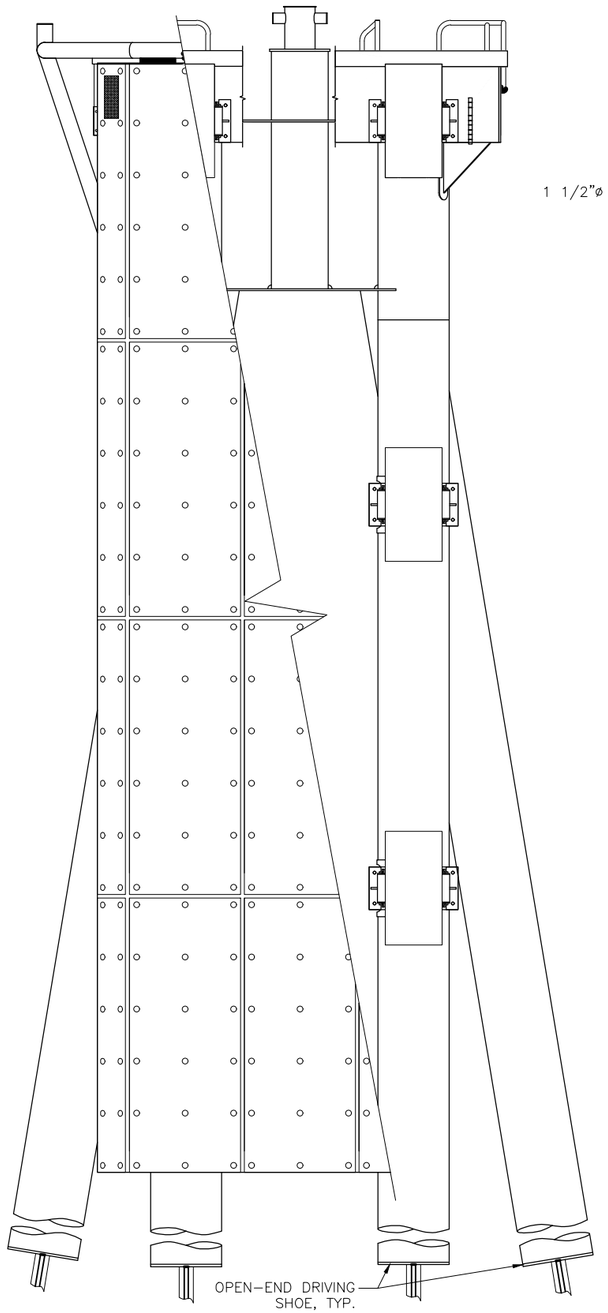

1 **FRONT ELEVATION**
Scale: 3/8" = 1'-0"

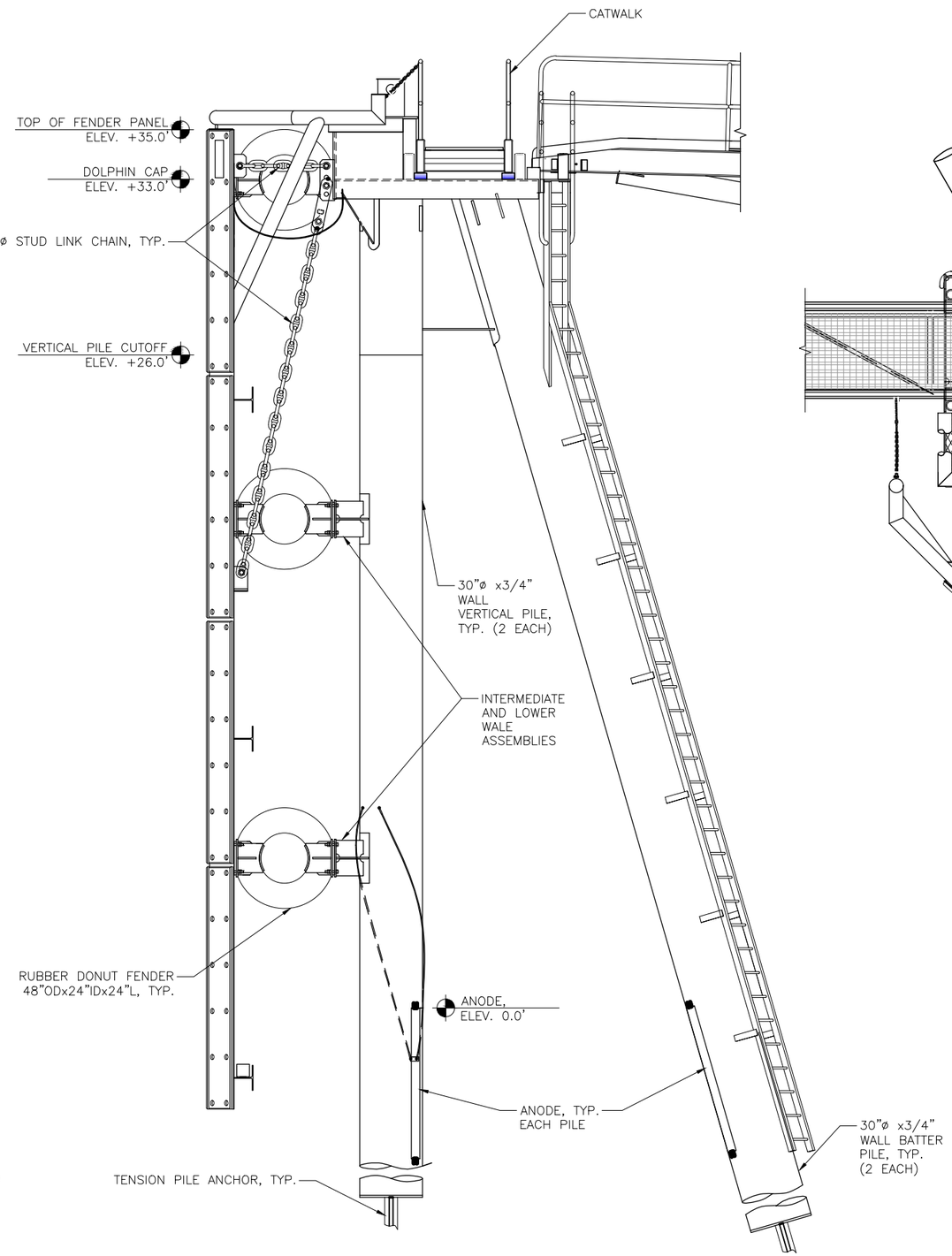

2 **SIDE ELEVATION**
Scale: 3/8" = 1'-0"

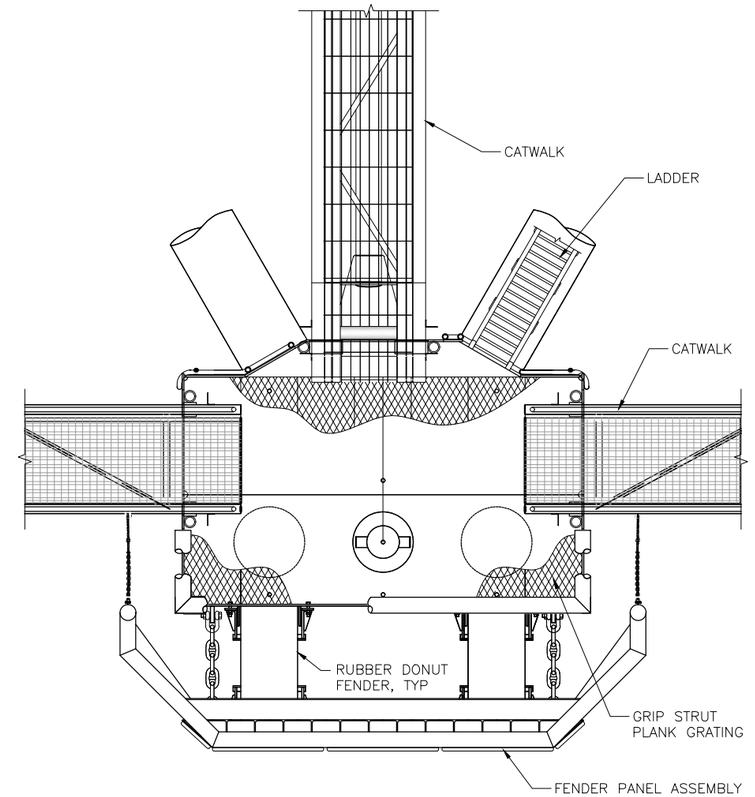

3 **TOP PLAN VIEW**
Scale: 3/8" = 1'-0"

PROGRESS SET NOT FOR CONSTRUCTION

R&M CONSULTANTS, INC.
9101 Vanguard Drive
Anchorage, Alaska 99507
rmconsult.com• email@rmconsult.com
phone: 907.522.1707 • fax: 907.522.3403
CORPORATE AUTHORIZATION NUMBER AECC111

Haines Borough
LUTAK DOCK BARGE RAMP

No.	Description	Date

Drawn By: JVC
Checked By: JD/DA
Date: JANUARY 2018
Phase: PRELIMINARY
Project No: 2573.01
SHEET TITLE: 4 PILE DOLPHIN
SHEET NO: 10 OF 10
C1.7

Z:\project\2573.01 HAINES B Lutak Dock RORO Condition Report\Civil\ACAD\2573.01 – C1.7 – 4 Pile Dolphin Details.dwg
Plotted 1/17/2018 3:51 PM by Jean Cumlat