HAINES BOROUGH, ALASKA

LETNIKOF COVE HARBOR RENOVATION
ADDITIVE ALTERNATE A

LOCATION MAP

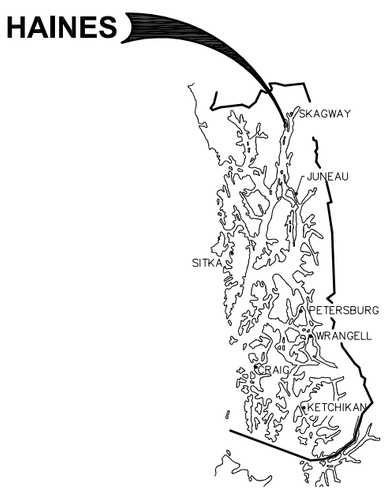

SOUTHEAST ALASKA

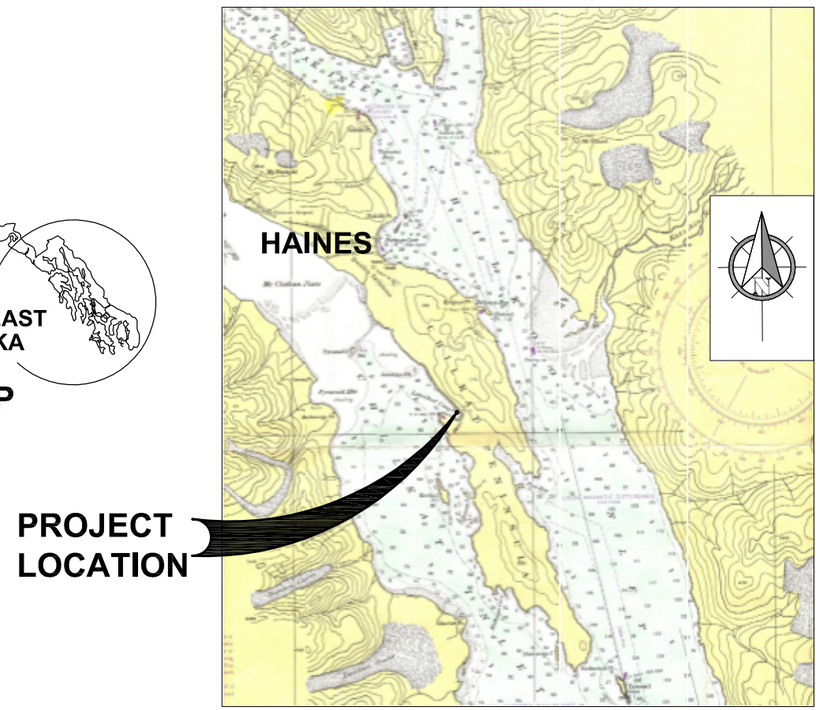

VICINITY MAP

SCALE IN MILES

0 1 2 4

PLAN SET L
DRAWING INDEX

SHEET NO.	DWG. NO.	TITLE
		GENERAL
1 OF 24	L1.01	COVER SHEET, VICINITY MAP AND DRAWING INDEX
2 OF 24	L1.02	LEGEND, ABBREVIATIONS AND GENERAL NOTES
3 OF 24	L1.03	EXISTING CONDITIONS AND DEMOLITION PLAN
4 OF 24	L1.04	DEMOLITION DETAILS
5 OF 24	L1.05	GENERAL SITE PLAN AND SURVEY CONTROL
		APPROACH DOCK AND GANGWAY
6 OF 24	L2.01	APPROACH DOCK AND GANGWAY ELEVATION
7 OF 24	L2.02	APPROACH DOCK FRAMING PLAN AND DETAILS
8 OF 24	L2.03	APPROACH DOCK DETAILS
9 OF 24	L2.04	PILE SCHEDULE AND DETAILS
10 OF 24	L2.05	SALVAGED GANGWAY DETAILS
11 OF 24	L2.06	SALVAGED GANGWAY DETAILS
		NEW FLOATS
12 OF 24	L3.01	GANGWAY LANDING FLOAT FRAMING PLAN AND DETAILS
13 OF 24	L3.02	GANGWAY LANDING FLOAT DETAILS
14 OF 24	L3.03	GANGWAY LANDING FLOAT DETAILS
15 OF 24	L3.04	GANGWAY LANDING FLOAT DETAILS
16 OF 24	L3.05	SEGMENTAL TIMBER FLOAT FRAMING PLAN
17 OF 24	L3.06	SEGMENTAL TIMBER FLOAT DETAILS
18 OF 24	L3.07	SEGMENTAL TIMBER FLOAT DETAILS
19 OF 24	L3.08	SEGMENTAL TIMBER FLOAT DETAILS
20 OF 24	L3.09	SEGMENTAL TIMBER FLOAT DETAILS
		PIPE FLOAT RENOVATION
21 OF 24	L4.01	PIPE FLOAT RENOVATION PLAN
22 OF 24	L4.02	PIPE FLOAT RENOVATION DETAILS
23 OF 24	L4.03	ANCHOR CHAIN REPLACEMENT PLAN
24 OF 24	L4.04	ANCHOR CHAIN REPLACEMENT DETAILS

PROJECT SCHEDULE

DESCRIPTION	SCHEDULE
1. EARLIEST ALLOWED FIELD START	OCTOBER 1, 2013
2. SUBSTANTIAL COMPLETION	MAY 1, 2014
3. FINAL COMPLETION OF ALL WORK UNDER THIS CONTRACT	MAY 15, 2014

TIDAL INFORMATION

EXTREME HIGH WATER (EHW)	22.5'
HIGH TIDE LINE (HTL)	21.2'
MEAN HIGH WATER (MHW)	15.8'
MEAN LOWER LOW WATER (MLLW)	0.0'
EXTREME LOW WATER (ELW) ESTIMATED	−6.8'

PND ENGINEERS, INC. (PND) IS NOT RESPONSIBLE FOR SAFETY PROGRAMS, METHODS OR PROCEDURES OF OPERATION, OR THE CONSTRUCTION OF THE DESIGN SHOWN ON THESE DRAWINGS. DRAWINGS ARE FOR THE USE OF THIS PROJECT ONLY AND ARE NOT INTENDED FOR REUSE WITHOUT WRITTEN APPROVAL FROM PND. DRAWINGS ARE ALSO NOT TO BE USED IN ANY MANNER THAT WOULD CONSTITUTE A DETRIMENT DIRECTLY OR INDIRECTLY TO PND.

REVISIONS

REV.	DATE	DESCRIPTION	DWN.	CKD.	APP.

PND ENGINEERS, INC.
9360 Glacier Highway Suite 100
Juneau, Alaska 99801
Phone: 907-586-2093
Fax: 907-586-2099
www.pndengineers.com

DESIGN: MLB CHECKED: BMI
DRAWN: PND APPROVED: CRS
SCALE: AS SHOWN
DATE: 3/4/13

STATE OF ALASKA 2401 Charles R. Somerville CE-8845 REGISTERED PROFESSIONAL ENGINEER

HAINES BOROUGH
LETNIKOF COVE HARBOR RENOVATION

SHEET TITLE:
COVER SHEET, VICINITY MAP AND DRAWING INDEX

PND PROJECT NO.: 112091 DWG. FILE: 1.01_.DWG

L1.01

SHEET 1 OF 24

ABBREVIATIONS

A	
AC	ASBESTOS CEMENT
ACP	ASPHALT CONCRETE PAVEMENT
ADJ	ADJUSTABLE
APPX	APPROXIMATE
AV	AIR RELEASE VALVE
B	
BFV	BUTTERFLY VALVE
BOP	BEGINNING OF PROJECT
BRG	BEARING
BTM	BOTTOM
C	
C&G	CURB & GUTTER
CB	CATCH BASIN
CI	CAST IRON
CIP	CAST-IN-PLACE
CJ	CONTROL JOINT
CL	CENTER LINE
CMP	CORRUGATED METAL PIPE
CO	CLEANOUT
CONC	CONCRETE
CONN	CONNECTION
CONSTR	CONSTRUCTION
CP	CONTROL PANEL
CTR	CENTER
CY	CUBIC YARD
D	
D/DIA	DIAMETER
DL	DEAD LOAD
DIP	DUCTILE IRON PIPE
DIM	DIMENSION
DN	DOWN
DTL	DETAIL
E	
E	EAST
EA	EACH
EJ	EXPANSION JOINT
EL/ELEV	ELEVATION
EOP	END OF PROJECT
EQ	EQUAL
EQUIP	EQUIPMENT
EST	ESTIMATE
EXC	EXCAVATE
EXIST	EXISTING
F	
F&I	FINISHED AND INSTALLED
FC	FRONT FACE OF CURB
FD	FLOOR DRAIN
FGR	FINISHED GRADE
FF	FINISHED FLOOR
FIN	FINISH (ED)
FM	FORCE MAIN SEWER
FND	FOUNDATION
FT	FOOT
FTG	FOOTING
G	
GAL	GALLON
GB	GRADE BREAK
GPM	GALLONS PER MINUTE
GRD	GROUND
GV	GATE VALVE
H	
H&T	HUB & TACK
HD	HEAVY DUTY
HDPE	HIGH DENSITY POLYETHYLENE
HSE	HOUSE
HT	HEIGHT
HWY	HIGHWAY
I	
ID	INSIDE DIAMETER
IE	INVERT ELEVATION
IN	INCH
INCL	INCLUDE (D) (ING)
INSUL	INSULATE (D) (ION)
INV	INVERT
L	
LBS	POUNDS
LF	LINEAR FEET
LL	LIVE LOAD
LOC	LOCATION
LS	LUMP SUM
M	
MAX	MAXIMUM
MECH	MECHANICAL
MFR	MANUFACTURE (R)
MH	MANHOLE
MSF	1000 SQUARE FEET
MTL	MATERIAL (S)
N	
N	NORTH
NFS	NON FROST SUSCEPTIBLE
NIC	NOT IN CONTRACT
NTS	NOT TO SCALE
O	
OBD	OVERBURDEN
OC	ON CENTER
OD	OUTSIDE DIAMETER
OG	ORIGINAL GROUND
OHE	OVERHEAD ELECTRICAL
OPP	OPPOSITE
P	
PCC	PRECAST CONCRETE
PED	PEDESTAL
PER	PERIMETER
PERF	PERFORATE (D)
PI	POINT OF INTERSECTION
PL	PROPERTY LINE
PROJ	PROJECT (ION)
PRV	PRESSURE REDUCING VALVE
PSI	POUND PER SQUARE INCH
PT	POINT, PRESSURE TREATED
PVC	POINT OF VERTICAL CURVATURE
PVMT	PAVEMENT
PVT	POINT OF VERTICAL TANGENCY
Q	
QTY	QUANTITY
R	
RAD	RADIUS
RE	RIM ELEVATION
REF	REFERENCE
REQD	REQUIRED
RET	RETAINING
RO	ROUGH OPENING
ROW	RIGHT OF WAY
S	
S	SOUTH
SD	STORM DRAIN
SDR	STANDARD DIMENSION RATIO
SF	SQUARE FOOT
SI	STREET INTERSECTION
SPEC	SPECIFICATION (S)
SQ	SQUARE
SS	SANITARY SEWER
SSC	SANITARY SEWER CONNECTION
SST	STAINLESS STEEL
SSX	SANITARY SEWER CROSSING
STA	STATION
STD	STANDARD
STL	STEEL
SW	SIDEWALK
SWR	SEWER
SY	SQUARE YARD
SYM	SYMMETRICAL
T	
TBC	TOP BACK OF CURB
TBM	TEMPORARY BENCH MARK
TD	TRENCH DRAIN
TEL	TELEPHONE
TH	TEST HOLE
TV	TELEVISION
TYP	TYPICAL
U	
UBC	UNIFORM BUILDING CODE
UMC	UNIFORM MECHANICAL CODE
UNO	UNLESS NOTED OTHERWISE
UPC	UNIFORM PLUMBING CODE
V	
VB	VALVE BOX
VERT	VERTICAL
W	
W	WEST
W/	WITH
WD	WOOD
WL	WATERLINE
W/O	WITHOUT
X	
XFRMR	TRANSFORMER
<PT	ANGLE POINT

LEGEND

EXISTING	PROPOSED	
——— - ———	—— - — - ——	CENTERLINE
----------		EDGE ACP OR GRAVEL ROADWAY
–ROW—— - - ——		RIGHT OF WAY

A / 1.02 — SECTION OR DETAIL CALLOUT; LOCATION OF DETAIL OR REFERENCE DRAWING

GENERAL NOTES

1. PROPERTY DISTURBED DURING CONSTRUCTION SHALL BE RESTORED TO ITS PRE–CONSTRUCTION CONDITION OR BETTER AT NO ADDITIONAL COST.
2. THE LOCATIONS OF EXISTING FEATURES AND UTILITIES SHOWN ON THE DRAWINGS ARE DERIVED FROM AKDOT&PF AS–BUILTS AND ARE APPROXIMATE. ADDITIONAL UTILITIES MAY BE PRESENT HOWEVER ARE NOT SHOWN. THE CONTRACTOR SHALL VERIFY ALL UTILITY LOCATIONS IN THE FIELD AS NECESSARY, PRIOR TO BEGINNING WORK. THE HORIZONTAL AND VERTICAL LOCATIONS OF ALL UTILITIES ENCOUNTERED IN THE FIELD SHALL BE RECORDED ON THE CONTRACTOR'S RECORD DRAWINGS. CONTACT LOCAL UTILITY COMPANIES PRIOR TO ANY/ ALL EXCAVATIONS AT THE FOLLOWING TELEPHONE NUMBERS:

WATER AND WASTEWATER:	(907) 766–2237 OR 766–2200
POWER & LIGHT, AP&T:	(907) 766–2331
CATV:	(907) 766–2137
TELEPHONE, GTE ALASKA:	(907) 766–2311

DIAL BEFORE YOU DIG

3. ALIGNMENT OF STRUCTURES & FINAL LOCATIONS ARE SUBJECT TO MINOR REVISIONS BY THE ENGINEER TO FIT SITE CONDITIONS.
4. PROPERTY LINE LOCATIONS USED IN THESE PLANS ARE DERIVED FROM RECORD PLATS AND DO NOT REPRESENT A BOUNDARY SURVEY.

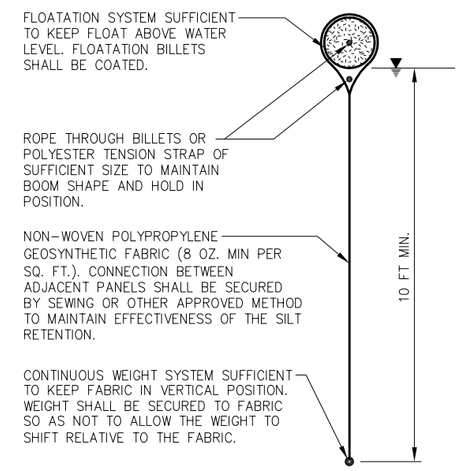

SILT CONTAINMENT BOOM

NOTES:
1. GENERAL REQUIREMENTS SHOWN. FINAL DESIGN BY CONTRACTOR.
2. PLACE AND SECURE BOOM AROUND ALL PILE INSTALLATION EQUIPMENT AS REQUIRED TO ADEQUATELY CONTAIN DRILL CUTTINGS DURING DISCHARGE. PROVIDE SUITABLE LENGTH OF BOOM AS REQUIRED.
3. REMOVE AND RELOCATE BOOM UPON COMPLETION OF PILE INSTALLATION.

REVISIONS

REV.	DATE	DESCRIPTION	DWN.	CKD.	APP.

PND ENGINEERS, INC.
9360 Glacier Highway Suite 100
Juneau, Alaska 99801
Phone: 907-586-2093
Fax: 907-586-2099
www.pndengineers.com

DESIGN: MLB CHECKED: BMI
DRAWN: PND APPROVED: CRS
SCALE: NTS
DATE: 3/4/13

STATE OF ALASKA — 2191 — Charles R. Somerville — CE-8845 — REGISTERED PROFESSIONAL ENGINEER

HAINES BOROUGH
LETNIKOF COVE HARBOR RENOVATION

SHEET TITLE: LEGEND, ABBREVIATIONS AND GENERAL NOTES

PND PROJECT NO.: 112091 DWG. FILE: 1.02_.DWG

L1.02
SHEET 2 OF 24

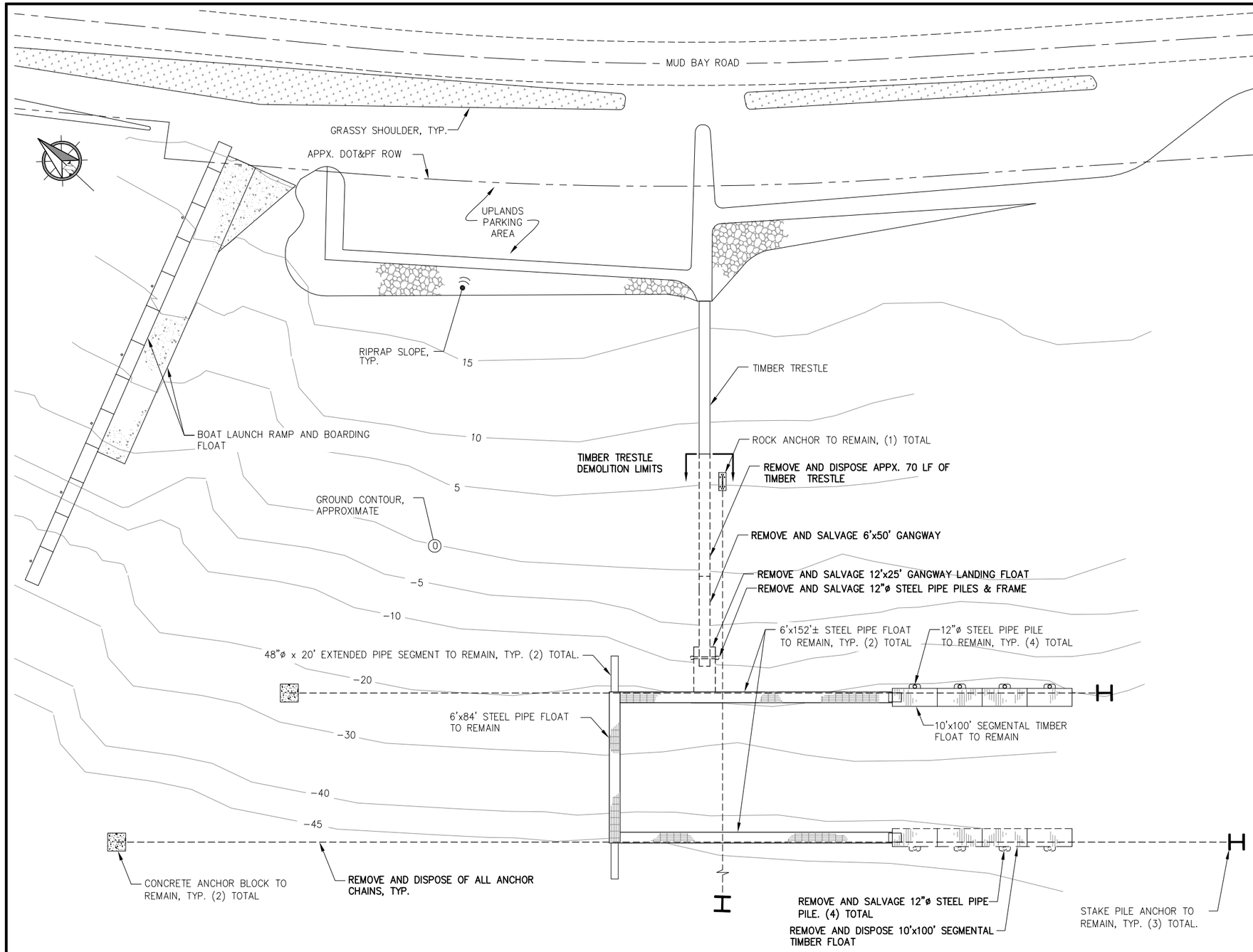

EXISTING CONDITIONS AND DEMOLITION PLAN

DEMOLITION SUMMARY

1. REMOVE AND DISPOSE APPROXIMATELY 70 LF OF TIMBER TRESTLE, (OFFSHORE END), INCLUDING RAILING, DECKING, STRINGERS, CAP BEAM, TIMBER PILES, BRACING AND OTHER APPURTENANCES. PILES TO BE REMOVED IN THEIR ENTIRETY.
2. REMOVE AND SALVAGE 6'X50' STEEL GANGWAY INCLUDING MOUNTING HARDWARE AND ALL OTHER MISCELLANEOUS RELATED APPURTENANCES.
3. REMOVE AND SALVAGE 12'X25' GANGWAY LANDING FLOAT.
4. REMOVE AND SALVAGE 12"ø STEEL PIPE PILE FRAME AT GANGWAY LANDING FLOAT. PILES TO BE REMOVED IN THEIR ENTIRETY.
5. REMOVE AND DISPOSE 10'x100' SEGMENTAL TIMBER FLOAT ON OFFSHORE SIDE OF FLOAT SYSTEM.
6. REMOVE AND SALVAGE (4) 12"ø STEEL PIPE PILES ON OFFSHORE SIDE OF FLOAT SYSTEM. PILES TO BE REMOVED IN THEIR ENTIRETY. ONE PILE HAS BROKEN OFF BELOW LOW WATER LINE. CONTRACTOR SHALL LOCATE AND REMOVE SECTION OF PILE THAT HAS BROKEN OFF AND IS LAYING AT MUDLINE.
7. REMOVE AND DISPOSE OF ALL ANCHOR CHAINS.

GENERAL NOTES

1. ANCHOR LOCATIONS ARE SHOWN APPX. CONTRACTOR TO VERIFY LOCATION.
2. MOST OF THE EXISTING TIMBER TRESTLE IS CONSTRUCTED W/ CREOSOTE TREATED TIMBERS AND PILING. CONTRACTOR SHALL DISPOSE IN ACCORDANCE W/ ALL REGULATORY REQUIREMENTS.
3. ALL SALVAGE MATERIALS SHALL BE NEATLY STACKED AND STORED IN UPLANDS PARKING AREA AS DIRECTED BY OWNER.

LEGEND

⊂====⊃	TO BE REMOVED
	CONCRETE ANCHOR BLOCK CONNECTION
	ROCK ANCHOR CONNECTION
H	STAKE PILE CONNECTION
----	ANCHOR CHAIN

HAINES BOROUGH ALASKA

REVISIONS

REV.	DATE	DESCRIPTION	DWN.	CKD.	APP.

PND ENGINEERS, INC.
9360 Glacier Highway Suite 100
Juneau, Alaska 99801
Phone: 907-586-2093
Fax: 907-586-2099
www.pndengineers.com

DESIGN: MLB CHECKED: BMI
DRAWN: PND APPROVED: CRS
SCALE: SCALE IN FEET 0 30 60 FT.

STATE OF ALASKA 9101 Charles R. Somerville CE-8845 REGISTERED PROFESSIONAL ENGINEER
DATE: 3/4/13

HAINES BOROUGH
LETNIKOF COVE HARBOR RENOVATION

SHEET TITLE: EXISTING CONDITIONS AND DEMOLITION PLAN

PND PROJECT NO.: 112091 DWG. FILE: 1.03_.DWG

L1.03

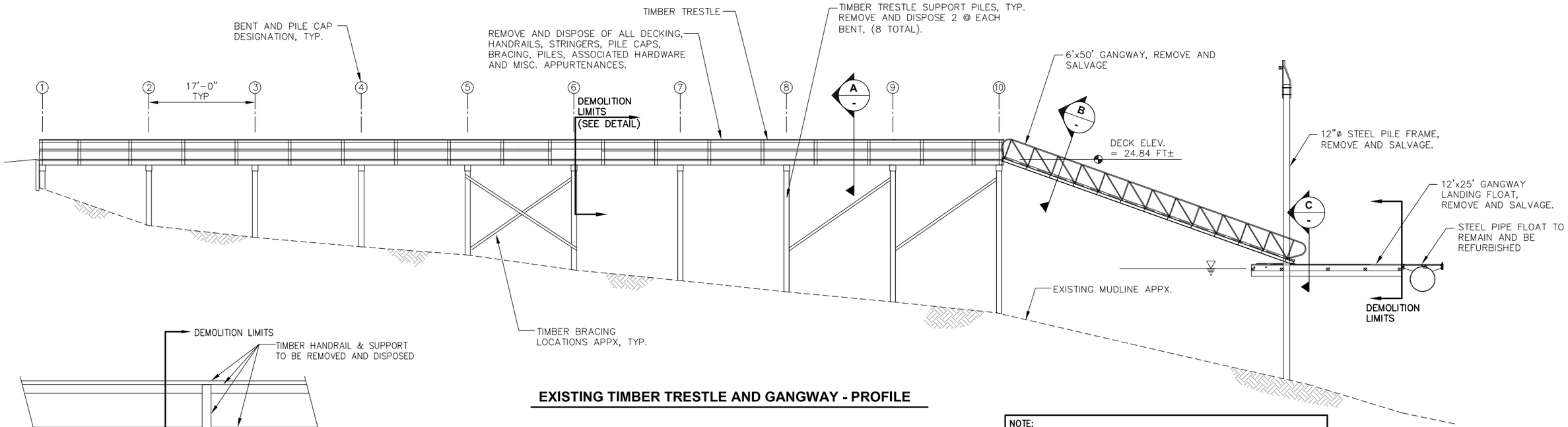

EXISTING TIMBER TRESTLE AND GANGWAY - PROFILE

NOTE:

1. LAYOUT AND DIMENSIONS OF EXISTING TIMBER TRESTLE ARE APPROXIMATE. CONTRACTOR TO FIELD VERIFY SIZES AND DIMENSIONS PRIOR TO CONSTRUCTION.
2. ALL TIMBER MEMBERS CONTAIN PRESERVATIVES. CONTRACTOR SHALL ENSURE THAT DEMOLITION AND DISPOSAL IS COMPLETED IN ACCORDANCE WITH ALL REGULATORY REQUIREMENTS.

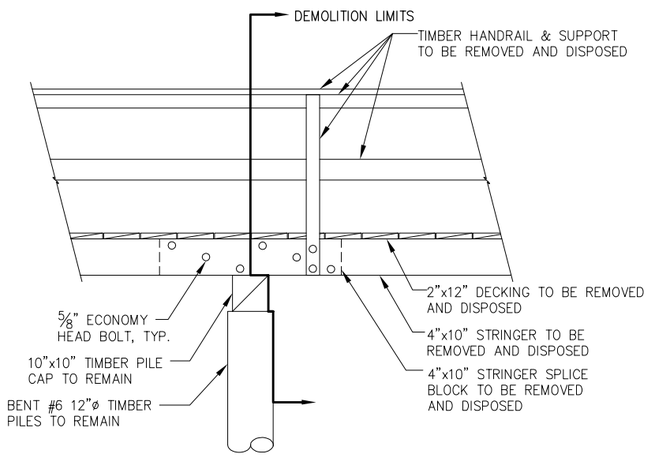

DEMOLITION LIMIT ELEVATION

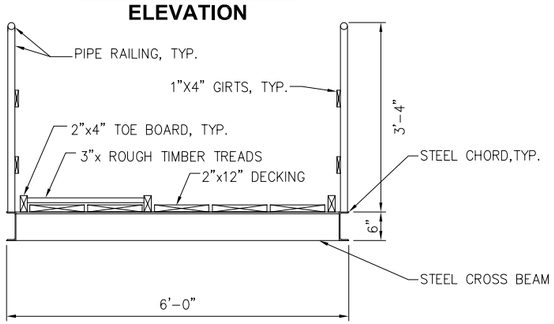

B - TYPICAL GANGWAY SECTION

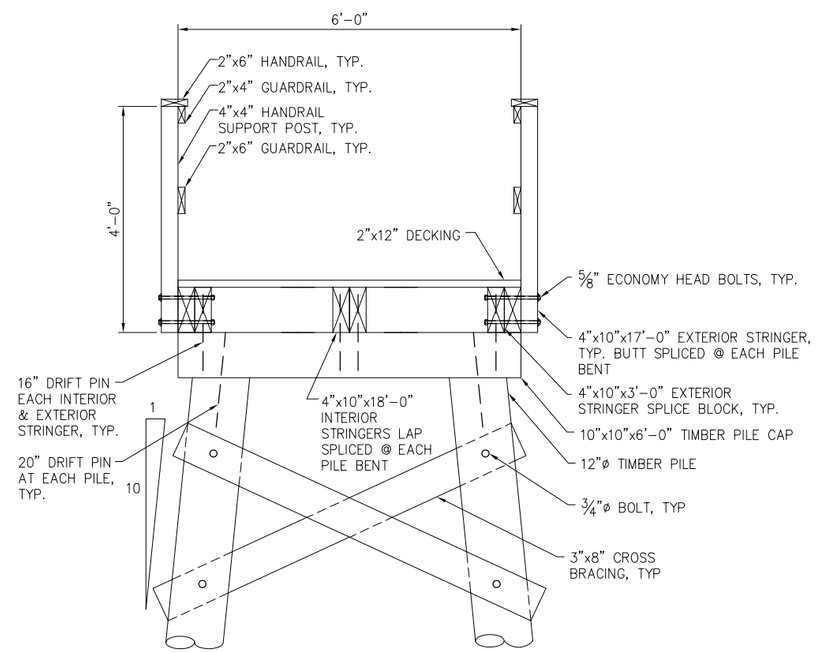

A - TYPICAL TIMBER TRESTLE SECTION

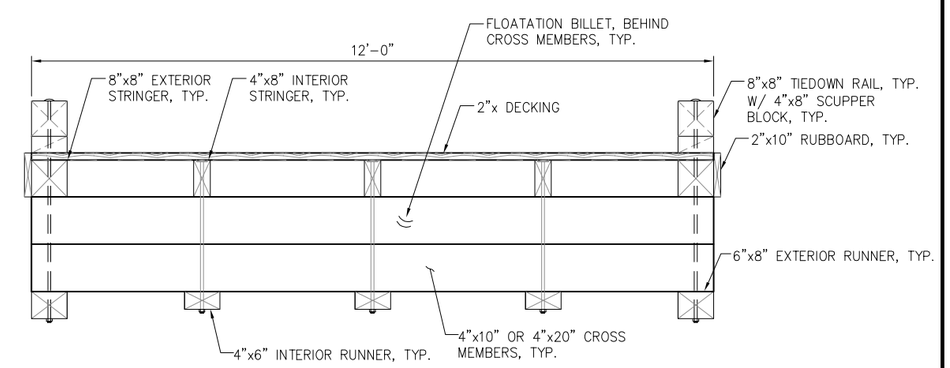

C - TYPICAL GANGWAY FLOAT SECTION

REVISIONS

REV.	DATE	DESCRIPTION	DWN.	CKD.	APP.

PND ENGINEERS, INC.
9360 Glacier Highway Suite 100
Juneau, Alaska 99801
Phone: 907-586-2093
Fax: 907-586-2099
www.pndengineers.com

DESIGN: MLB CHECKED: BMI
DRAWN: PND APPROVED: CRS
SCALE: NTS
DATE: 3/4/13

STATE OF ALASKA — 49TH — Charles R. Somerville — CE-8845 — REGISTERED PROFESSIONAL ENGINEER

HAINES BOROUGH
LETNIKOF COVE HARBOR RENOVATION

SHEET TITLE: **DEMOLITION DETAILS**

PND PROJECT NO.: 112091 DWG. FILE: 1.04_.DWG

L1.04

SHEET 4 OF 24

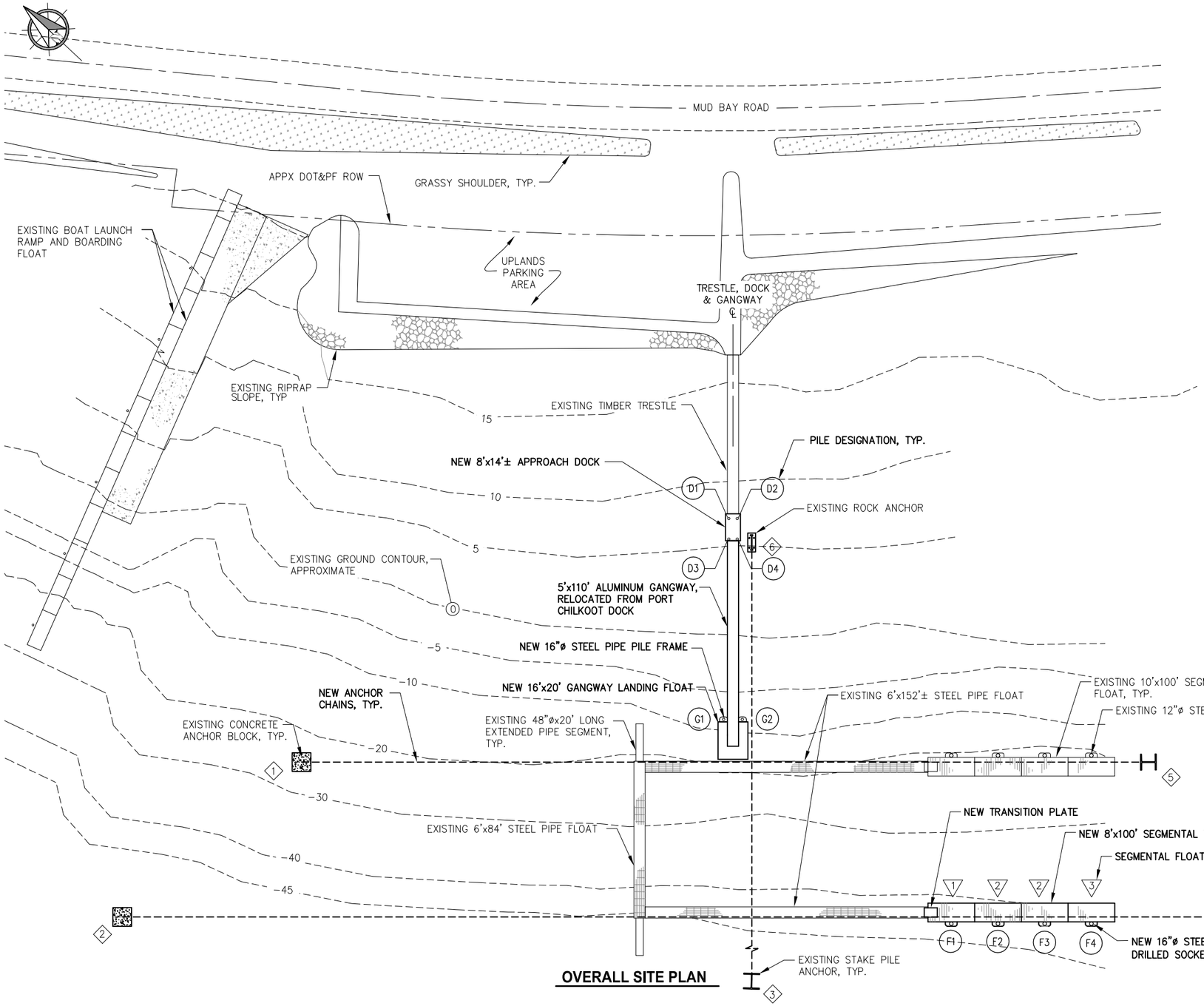

OVERALL SITE PLAN

SEQUENCE OF REQUIRED OPERATIONS

1. CONTRACTOR SHALL SURVEY EXISTING POSITION OF STEEL PIPE FLOAT PRIOR TO ANCHOR CHAIN REPLACEMENT. (REPLACING THE ANCHOR CHAINS COULD RESULT IN A SHIFT OF THE FLOAT SYSTEM.) ONCE THE NEW CHAINS ARE INSTALLED, CONTRACTOR SHALL SURVEY FLOAT AGAIN. ADJUSTMENTS TO THE CHAINS SHALL BE MADE AS NECESSARY TO MAINTAIN ORIGINAL POSITION.
2. REPLACE ALL ANCHOR CHAINS PRIOR TO DRIVING PILES. THIS STIPULATION IS TO ENSURE PILES FIT IN PILE HOOPS AS SPECIFIED.
3. IF FLOATS ARE INSTALLED PRIOR TO MARCH 1st, 2014 CONTRACTOR SHALL REMOVE FLOATS AND STORE IN UPLANDS PARKING AREA FOLLOWING PILE DRIVING & GANGWAY INSTALLATION. IF FLOATS ARE INSTALLED AFTER MARCH 1st, 2014 THEY MAY REMAIN IN PLACE. THIS STIPULATION IS TO PROTECT THESE SEASONAL USE FLOATS FROM ANY DAMAGE RESULTING FROM WINTER STORMS.

CONTROL FOR NEW HARBOR COMPONENTS SHALL BE AS FOLLOWS:

1. CENTERLINE OF NEW APPROACH DOCK, GANGWAY AND GANGWAY LANDING FLOAT SHALL ALIGN WITH CENTERLINE OF EXISTING TIMBER TRESTLE.
2. CENTERLINE OF NEW SEGMENTAL TIMBER FLOAT SHALL ALIGN WITH CENTERLINE OF EXIST STEEL PIPE FLOAT.
3. CONTRACTOR SHALL FIELD VERIFY LAYOUT WITH ENGINEER PRIOR TO PILE INSTALLATION.

LEGEND

- CONCRETE ANCHOR BLOCK CONNECTION
- ROCK ANCHOR CONNECTION
- STAKE PILE CONNECTION
- ANCHOR CHAIN
- D4 PILE DESIGNATION
- 1 ANCHOR/CHAIN DESIGNATION
- 2 SEGMENTAL FLOAT UNIT DESIGNATION

HAINES BOROUGH ALASKA

REVISIONS

REV.	DATE	DESCRIPTION	DWN.	CKD.	APP.

PND ENGINEERS, INC.
9360 Glacier Highway Suite 100
Juneau, Alaska 99801
Phone: 907-586-2093
Fax: 907-586-2099
www.pndengineers.com

DESIGN: MLB CHECKED: BMI
DRAWN: PND APPROVED: CRS
SCALE: SCALE IN FEET 0 30 60 FT.

STATE OF ALASKA 49TH Charles R. Somerville CE-8845 REGISTERED PROFESSIONAL ENGINEER
DATE: 3/4/13

HAINES BOROUGH
LETNIKOF COVE HARBOR RENOVATION

SHEET TITLE:
GENERAL SITE PLAN AND SURVEY CONTROL

PND PROJECT NO.: 112091 DWG. FILE: 1.05_.DWG

L1.05
SHEET 5 OF 24

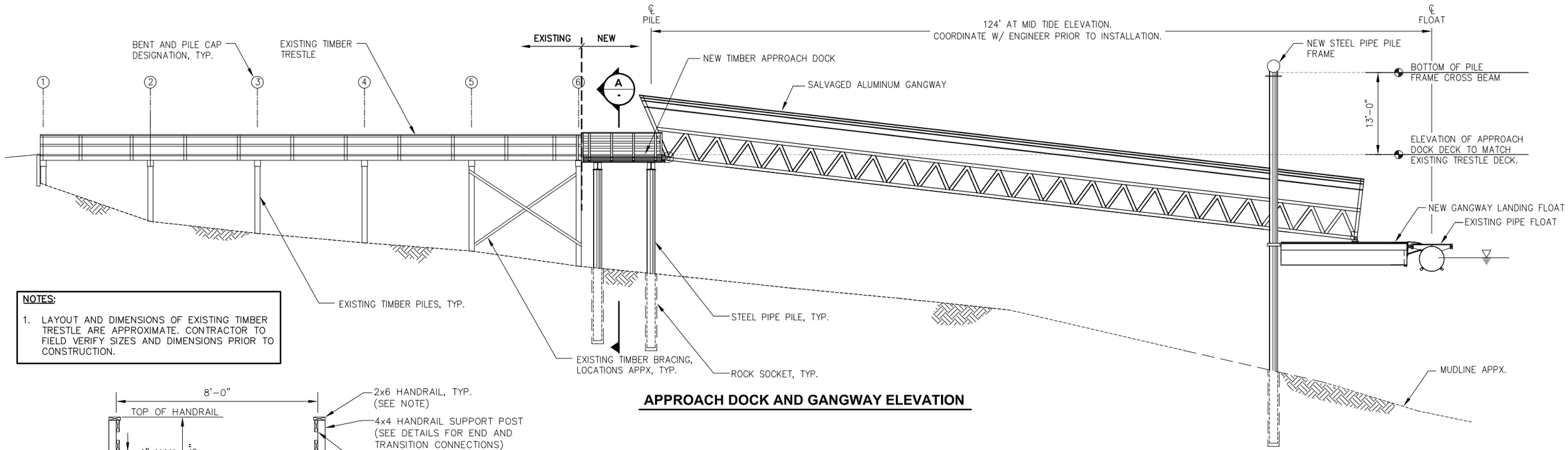

NOTES:

1. LAYOUT AND DIMENSIONS OF EXISTING TIMBER TRESTLE ARE APPROXIMATE. CONTRACTOR TO FIELD VERIFY SIZES AND DIMENSIONS PRIOR TO CONSTRUCTION.

APPROACH DOCK AND GANGWAY ELEVATION

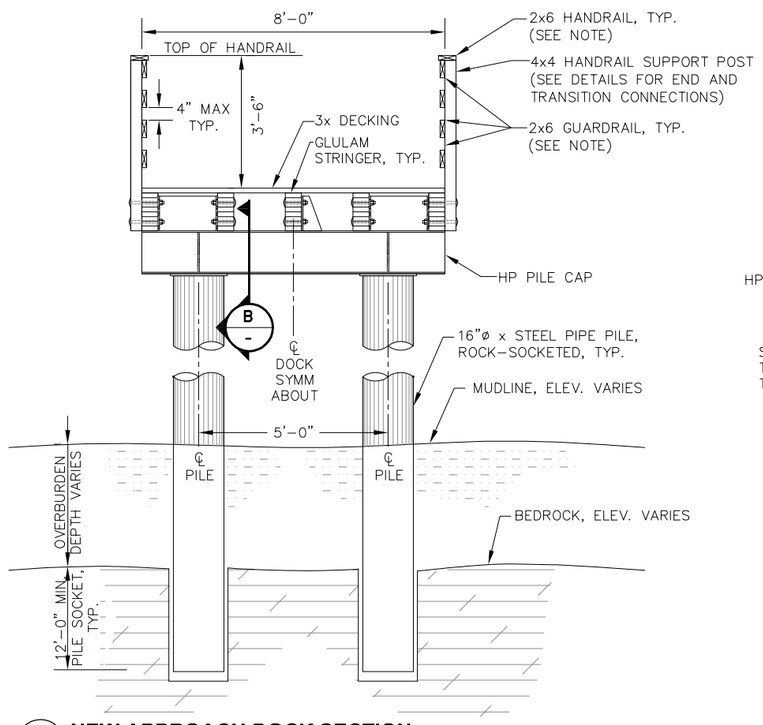

A NEW APPROACH DOCK SECTION

NOTE: 2x6 HANDRAIL AND GUARDRAIL SHALL BE FASTENED TO SUPPORT POST W/ 9 GA. 16d HOT-DIPPED GALV. SPIRAL SHANK NAILS. PREDRILL TIMBERS AS REQ'D PER AITC TO PREVENT SPLITTING.

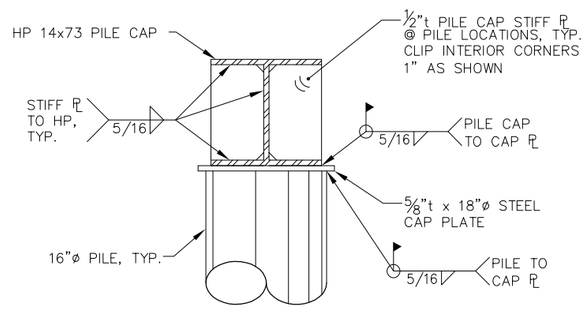

B TYPICAL PILE CAP SECTION

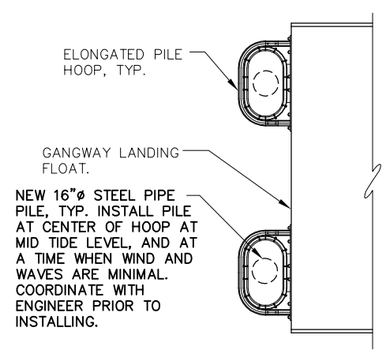

PILE FRAME INSTALLATION DETAIL

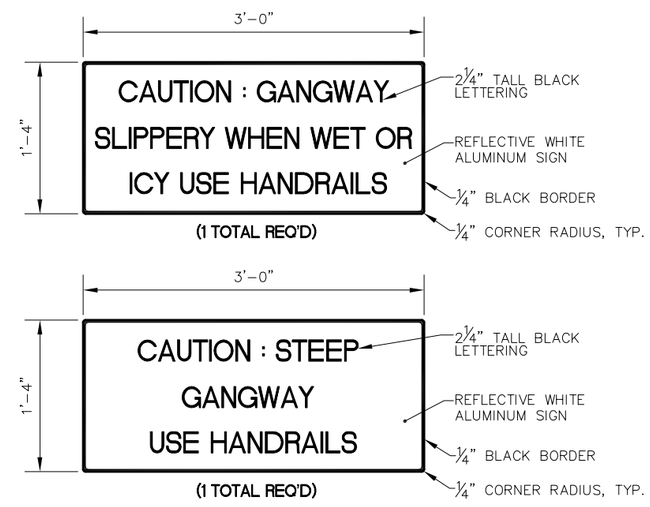

GANGWAY SIGNAGE

NOTE: MOUNT GANGWAY CAUTION SIGNS TO APPROACH DOCK SAFETY RAILS w/(3) HOT DIPPED GALVANIZED U-BOLTS, OR SIMILAR. FINAL LOCATION PER OWNER/ENGINEER

REVISIONS

REV.	DATE	DESCRIPTION	DWN.	CKD.	APP.

PND ENGINEERS, INC.
9360 Glacier Highway Suite 100
Juneau, Alaska 99801
Phone: 907-586-2093
Fax: 907-586-2099
www.pndengineers.com

DESIGN: MLB CHECKED: JLD
DRAWN: PND APPROVED: CRS
SCALE: NTS

STATE OF ALASKA — Charles R. Somerville — CE-8845 — REGISTERED PROFESSIONAL ENGINEER
DATE: 3/4/13

HAINES BOROUGH
LETNIKOF COVE HARBOR RENOVATION

SHEET TITLE: APPROACH DOCK AND GANGWAY ELEVATION

PND PROJECT NO.: 112091 DWG. FILE: 2.01_.DWG

L2.01
SHEET 6 OF 24

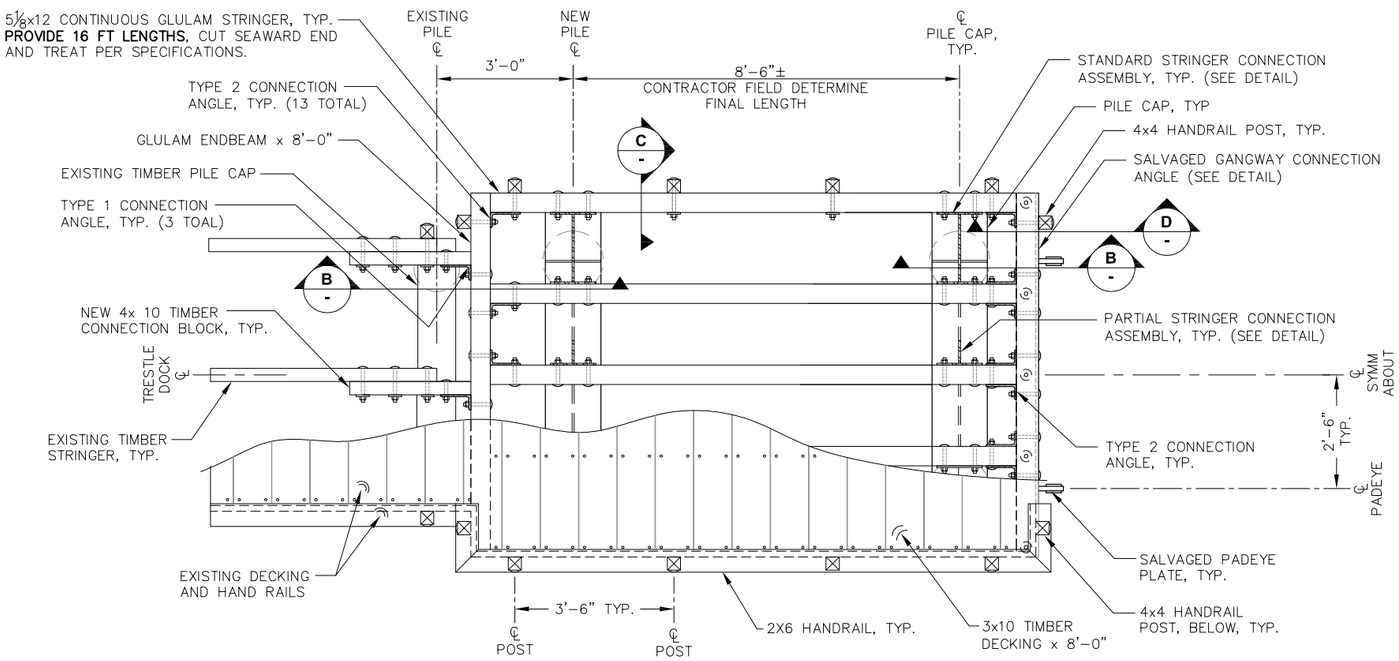

APPROACH DOCK FRAMING - PLAN

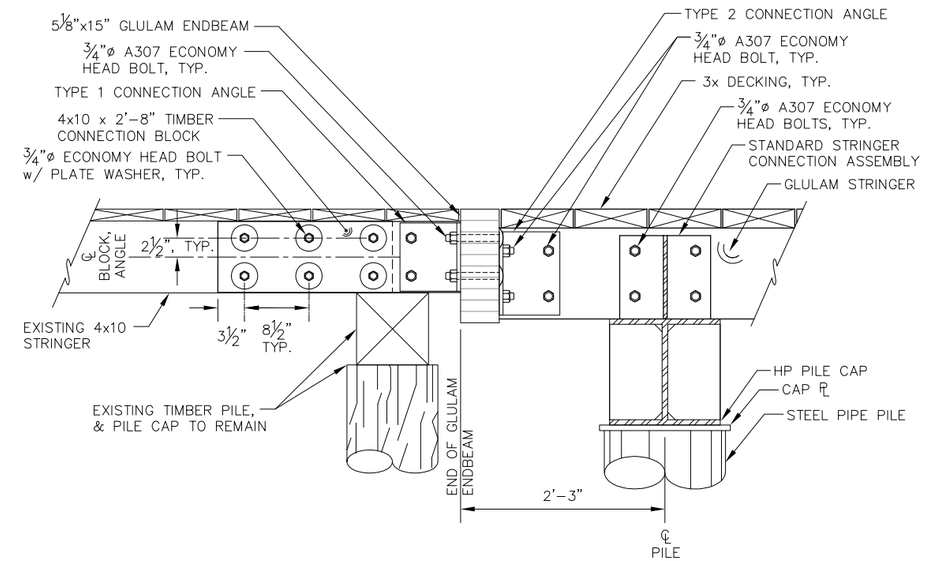

A - **APPROACH DOCK SECTION**

NOTES:

1. THE ENGINEER MAY DIRECT ADDITIONAL INCIDENTAL MEASURES BE PREFORMED IN ORDER TO FIELD FIT TO EXISTING CONDITIONS ENCOUNTERED.
2. 3x DECKING SHALL BE FASTENED w/ (2) 40d 5-INCH HOT-DIPPED GALVANIZED RING SHANK NAILS AT EACH STRINGER. PREDRILLED PER AITC SPECIFICATIONS.
3. GAP BETWEEN 3x DECK BOARDS TO BE BETWEEN ⅛" & ⅜", UNIFORM WIDTH ONLY FULL LENGTH BOARDS ARE ACCEPTABLE. CONTRACTOR TO DETERMINE GAP SPACING PRIOR TO DECK ATTACHMENT.
4. TREAT ALL FIELD CUTS AND DRILLED HOLES IN NEW AND EXISTING TIMBERS PER SPECIFICATIONS.
5. A MINOR DIFFERENCE IN HEIGHT MAY EXIST BETWEEN EXISTING STRINGERS AND NEW CONNECTION BLOCKS. TRIM CONNECTION BLOCKS AS NECESSARY FOR PROPER FIT.
6. CONNECTION BLOCKS TO BE FIELD DRILLED, HOLE PATTERNS MAY REQ. ADJUSTMENT TO AVOID CONFLICT w/ EXISTING HOLES ON APPROACH DOCK.
7. REMOVE AND REPLACE EXISTING TIMBER TRESTLE DECK AND HANDRAILS AS NEED TO INSTALL NEW CONNECTION ANGLES, BLOCKS AND HARDWARE.

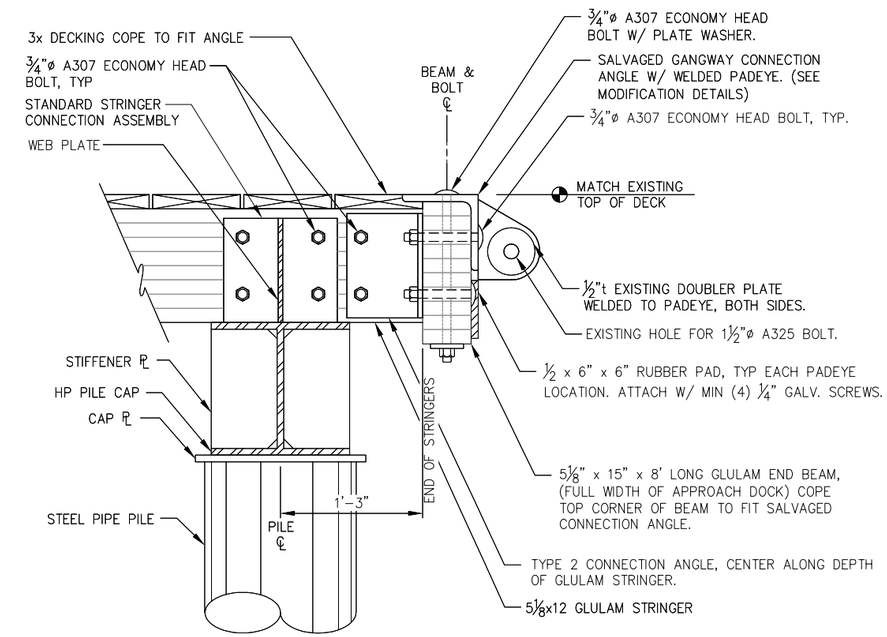

B - **APPROACH DOCK SECTION AT GANGWAY CONNECTION**

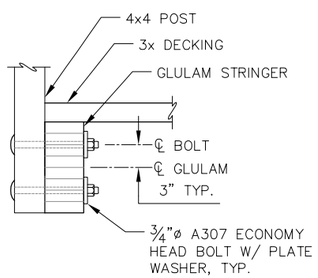

C - **SECTION**

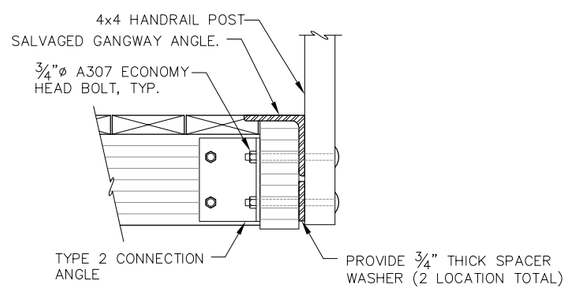

D - **SECTION**

HAINES BOROUGH ALASKA

REVISIONS

REV.	DATE	DESCRIPTION	DWN.	CKD.	APP.

PND ENGINEERS, INC.
9360 Glacier Highway Suite 100
Juneau, Alaska 99801
Phone: 907-586-2093
Fax: 907-586-2099
www.pndengineers.com

DESIGN: MLB CHECKED: SRY
DRAWN: PND APPROVED: CRS
SCALE: NTS

STATE OF ALASKA 49TH Charles R. Somerville CE-8845 REGISTERED PROFESSIONAL ENGINEER
DATE: 3/4/13

HAINES BOROUGH
LETNIKOF COVE HARBOR RENOVATION

SHEET TITLE:
APPROACH DOCK FRAMING PLAN AND DETAILS

PND PROJECT NO.: 112091 DWG. FILE: 4.03.DWG

L2.02
SHEET 7 OF 24

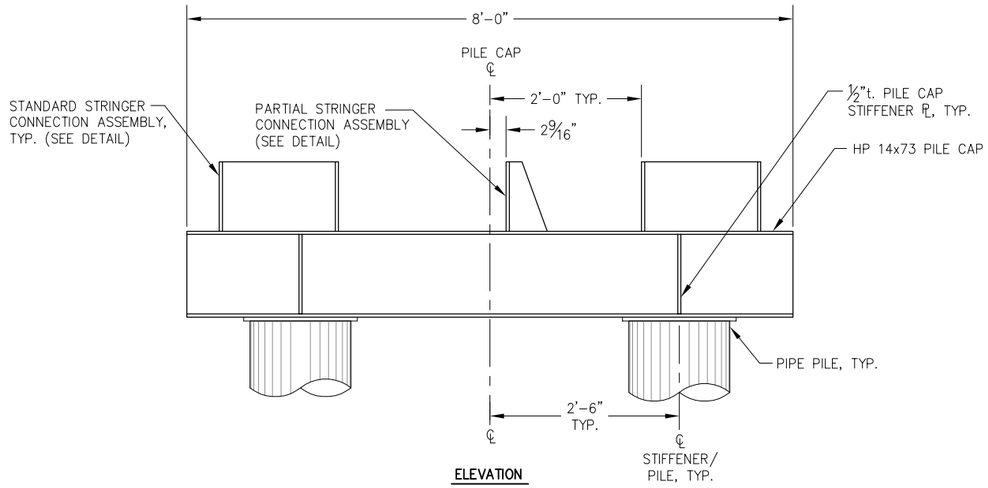

ELEVATION

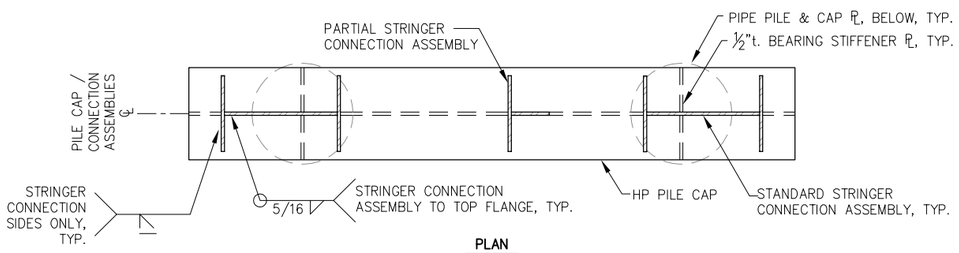

PLAN

PILE CAP DETAILS
(2 TOTAL REQ'D)

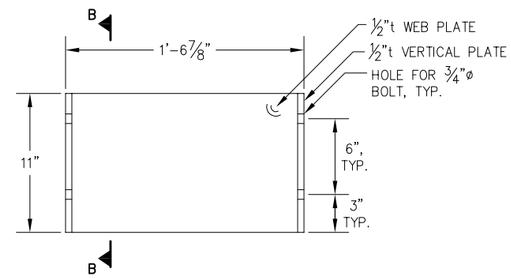

STANDARD STRINGER CONNECTION ASSEMBLY

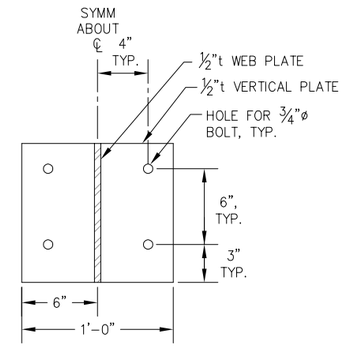

B-B: SECTION

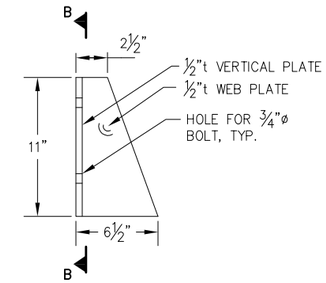

PARTIAL STRINGER CONNECTION ASSEMBLY

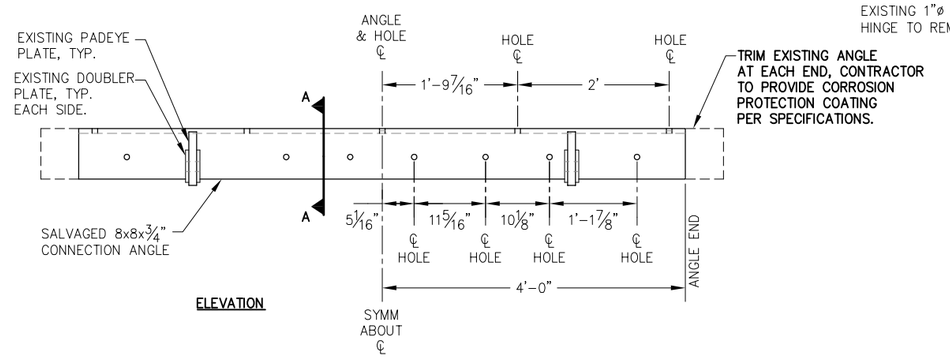

ELEVATION

SALVAGED GANGWAY CONNECTION ANGLE MODIFICATION DETAILS

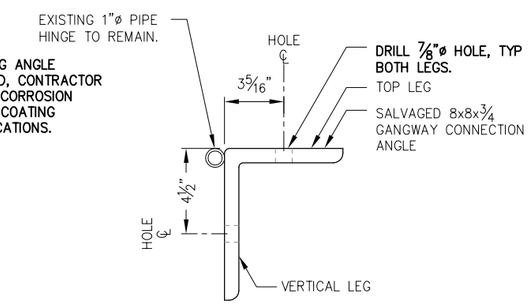

A-A SECTION

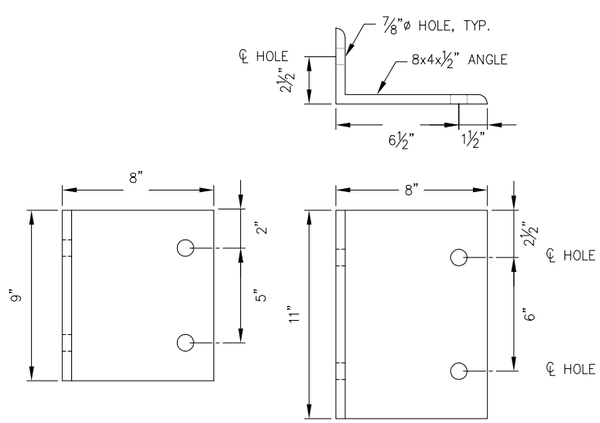

TYPE 1 (3 TOTAL)

TYPE 2 (13 TOTAL)

TYPICAL CONNECTION ANGLES

REVISIONS

REV.	DATE	DESCRIPTION	DWN.	CKD.	APP.

PND ENGINEERS, INC.
9360 Glacier Highway Suite 100
Juneau, Alaska 99801
Phone: 907-586-2093
Fax: 907-586-2099
www.pndengineers.com

DESIGN: MLB CHECKED: SRY
DRAWN: PND APPROVED: CRS
SCALE: NTS

STATE OF ALASKA — Charles R. Somerville — CE-8845 — REGISTERED PROFESSIONAL ENGINEER
DATE: 3/4/13

HAINES BOROUGH
LETNIKOF COVE HARBOR RENOVATION

SHEET TITLE: APPROACH DOCK DETAILS

PND PROJECT NO.: 112091 DWG. FILE: 2.03_.DWG

L2.03
SHEET 8 OF 24

APPROACH DOCK PILE SCHEDULE

PILE #	PILE DESIGNATION	SUPPLIED PILE LENGTHS (FEET)	DIAMETER / WALL THICKNESS	APPX. MUDLINE ELEV. (FT)	ESTIMATED BEDROCK ELEV. (FT)
1	D1	30	16" x 0.500"	+7'	+6'
2	D2	30	16" x 0.500"	+7'	+6'
3	D3	30	16" x 0.500"	+7'	+6'
4	D4	30	16" x 0.500"	+7'	+6'

FLOAT PILE SCHEDULE

PILE #	PILE DESIGNATION	SUPPLIED PILE LENGTHS (FEET)	DIAMETER / WALL THICKNESS	APPX. MUDLINE ELEV. (FT)	ESTIMATED BEDROCK ELEV. (FT)
5	G1	100	16" x 0.500"	−10	−40
6	G2	100	16" x 0.500"	−10	−40
7	F1	110	16" x 0.500"	−45	−65
8	F2	110	16" x 0.500"	−45	−65
9	F3	110	16" x 0.500"	−45	−65
10	F4	120	16" x 0.500"	−45	−70

NOTE:
1. SEE "OVERALL SITE PLAN" FOR LOCATION OF PILES WITHIN HARBOR.
2. ALL PILES SHALL BE ROCK-SOCKETED. PILE LENGTH INDICATED ASSUMES 12 FT ROCK SOCKET.

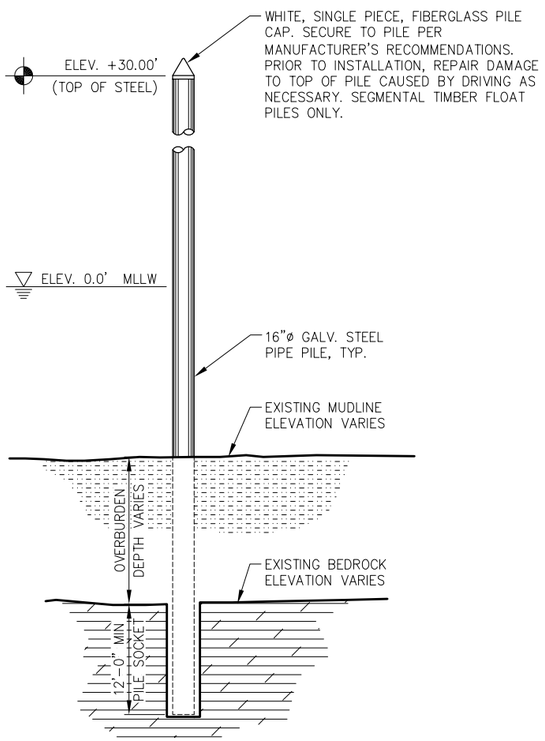

TYPICAL FLOAT PILE INSTALLATION DETAIL

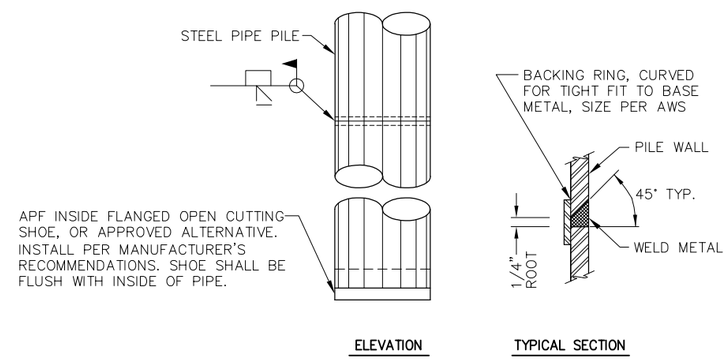

TYPICAL PILE SPLICE WELD

TYPICAL FOR ALL SHOP & FIELD PIPE PILE SPLICES. CONTRACTOR MAY SUBMIT ALTERNATIVE PILE SPLICE DETAIL FOR ENGINEER APPROVAL.

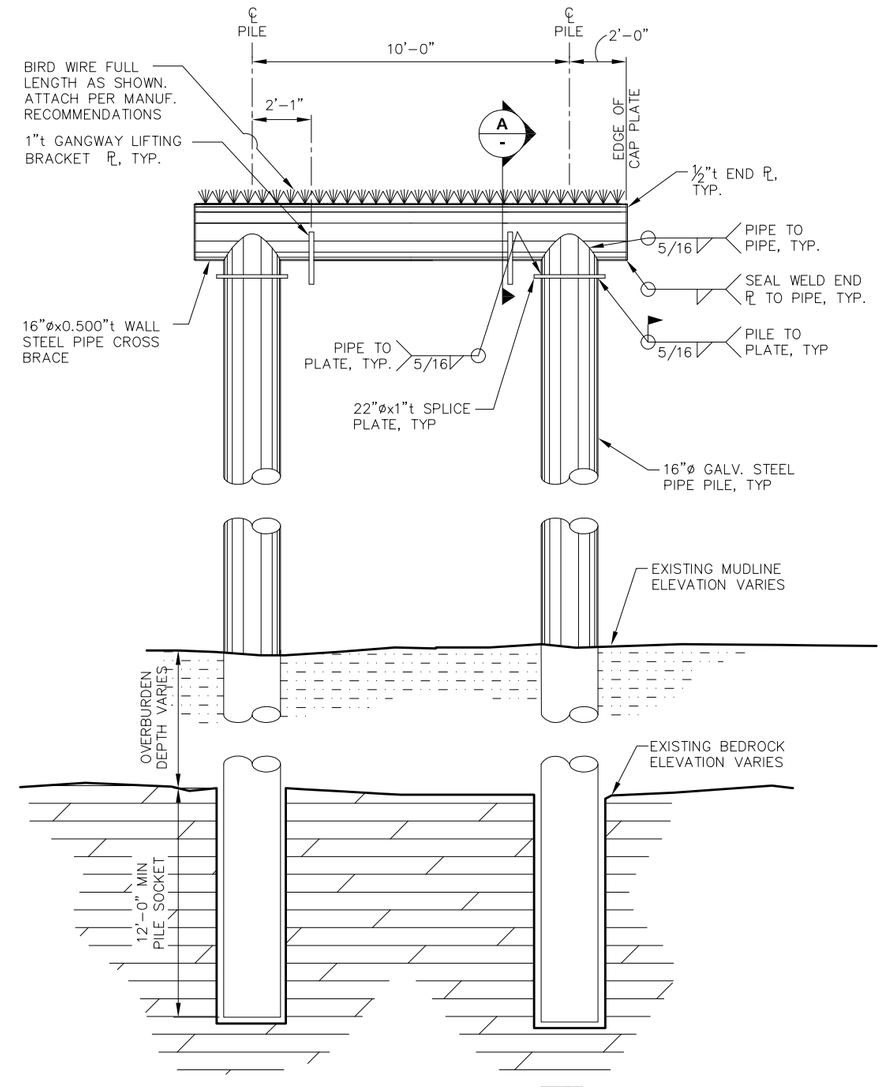

PILE FRAME & ROCK SOCKET DETAILS

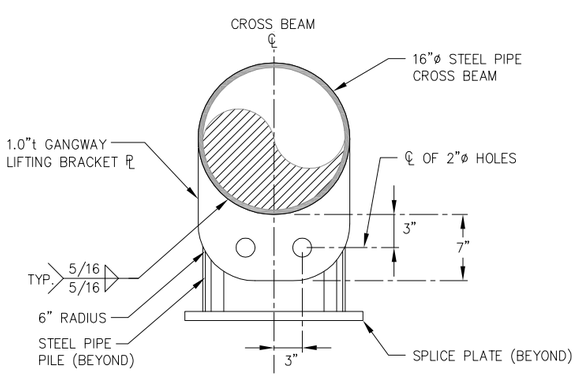

A - LIFTING BRACKET DETAIL

REVISIONS

REV.	DATE	DESCRIPTION	DWN.	CKD.	APP.

PND ENGINEERS, INC.
9360 Glacier Highway Suite 100
Juneau, Alaska 99801
Phone: 907-586-2093
Fax: 907-586-2099
www.pndengineers.com

DESIGN: MLB CHECKED: SRY
DRAWN: PND APPROVED: CRS
SCALE: NTS

STATE OF ALASKA 49TH Charles R. Somerville CE-8845 REGISTERED PROFESSIONAL ENGINEER
DATE: 3/4/13

HAINES BOROUGH
LETNIKOF COVE HARBOR RENOVATION

SHEET TITLE: **PILE SCHEDULE AND DETAILS**

PND PROJECT NO.: 112091 DWG. FILE: 2.04.DWG

L2.04
SHEET 9 OF 24

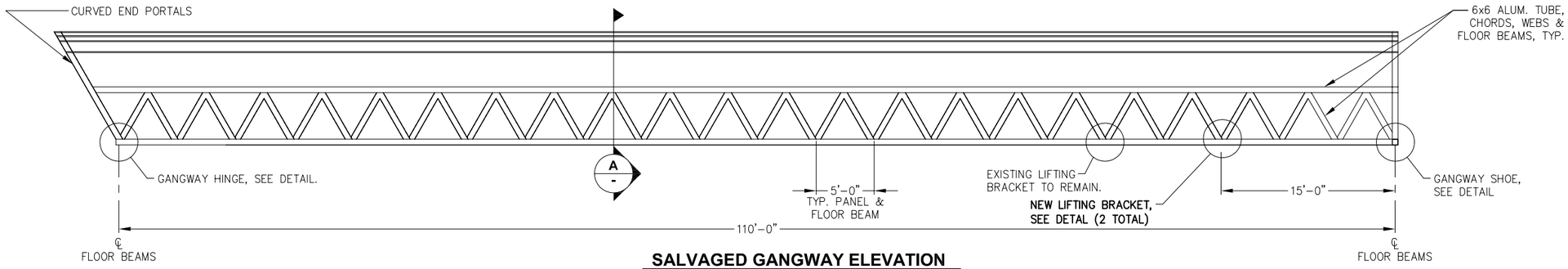

SALVAGED GANGWAY ELEVATION

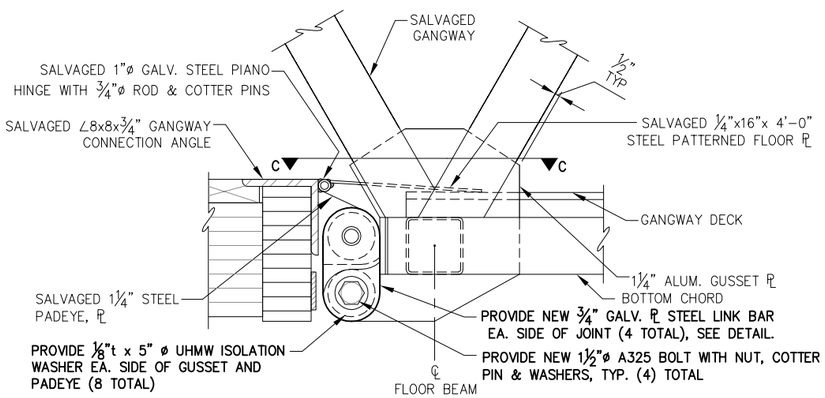

GANGWAY HINGE ASSEMBLY DETAIL

NOTE: EXISTING HOLES IN STEEL PADEYE AND ALUMINUM GUSSET PLATES FOR 1½"ø BOLT SHALL BE INSPECTED FOR SIGNS OF EXCESSIVE WEAR OR ELONGATION. IF WEAR OR ELONGATION IS PRESENT, THE CONTRACTOR SHALL FIX THE HOLE BY EITHER PROVIDING NEW ½"t DOUBLER PLATE W/ 19/16"ø HOLES, OR BY RE-DRILLING THE HOLE TO A LARGER DIAMETER AND PLACING A PRESSED-FIT UHMW BUSHING W/ A 19/16"ø HOLE. SUBMIT FIX TO ENGINEER FOR APPROVAL.

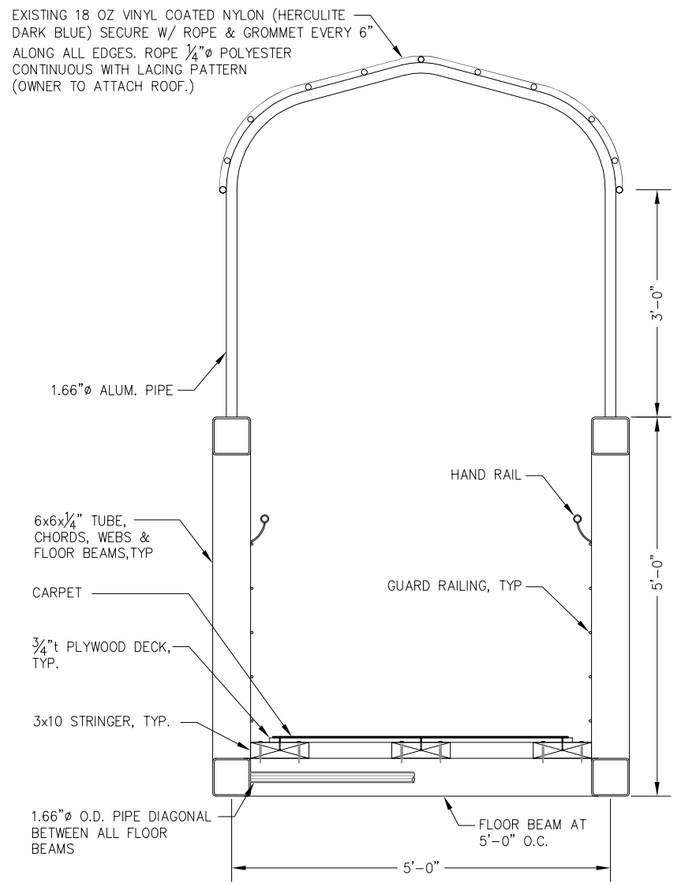

A - TYPICAL SECTION

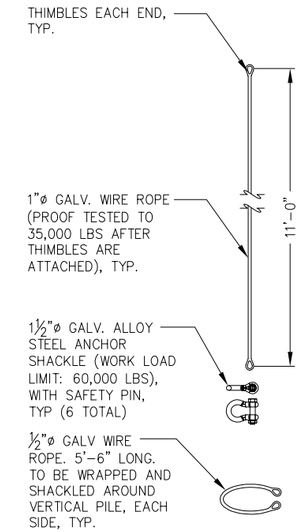

GANGWAY LIFTING ASSEMBLY (NIC)

(2 TOTAL REQ'D)

NOTE: OWNER TO PROVIDE GANGWAY LIFTING ASSEMBLY COMPONENTS AS SHOWN.

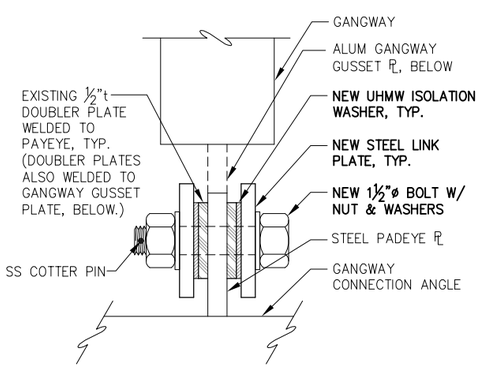

C-C: GANGWAY HINGE ASSEMBLY

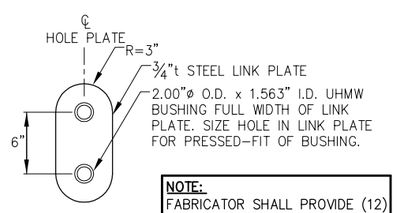

NOTE:
FABRICATOR SHALL PROVIDE (12) EXTRA BUSHINGS FOR OWNER.

NEW LINK PLATE

(4 TOTAL REQ'D)

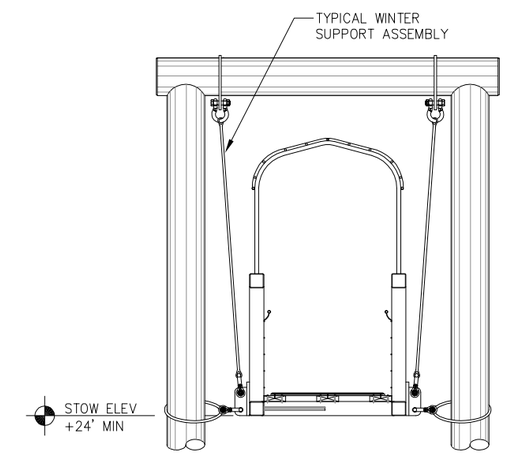

GANGWAY LIFTING PLAN (NIC)

NOTE:
1. GANGWAY SHOWN @ ELEVATION FOR WINTER STORAGE
2. ALL DETAILS NOT SHOWN ARE THE SAME AS SHOWN ON PILE FRAME DETAILS.

REVISIONS

REV.	DATE	DESCRIPTION	DWN.	CKD.	APP.

PND ENGINEERS, INC.
9360 Glacier Highway Suite 100
Juneau, Alaska 99801
Phone: 907-586-2093
Fax: 907-586-2099
www.pndengineers.com

DESIGN: MLB CHECKED: JLD
DRAWN: PND APPROVED: CRS
SCALE: NTS

STATE OF ALASKA — Charles R. Somerville — CE-8845 — REGISTERED PROFESSIONAL ENGINEER
DATE: 3/4/13

HAINES BOROUGH
LETNIKOF COVE HARBOR RENOVATION

SHEET TITLE: **SALVAGED GANGWAY DETAILS**

PND PROJECT NO.: 112091 DWG. FILE: 2.05_.DWG

L2.05
SHEET 10 OF 24

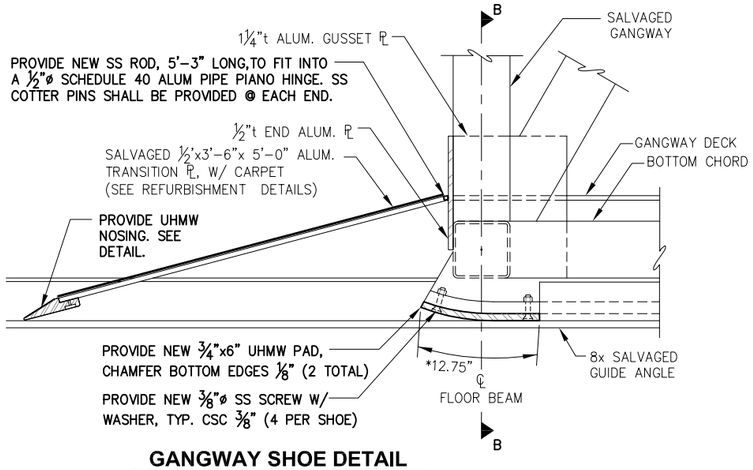

GANGWAY SHOE DETAIL

* CONTRACTOR TO FIELD VERIFY

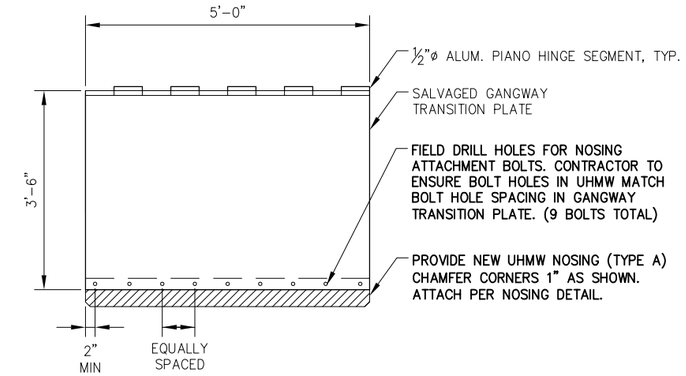

REFURBISHED GANGWAY TRANSITION PLATE

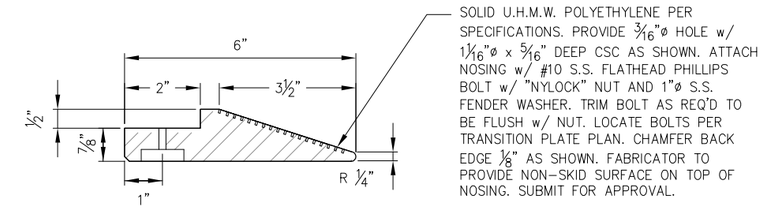

NEW UHMW NOSING - TYPE A

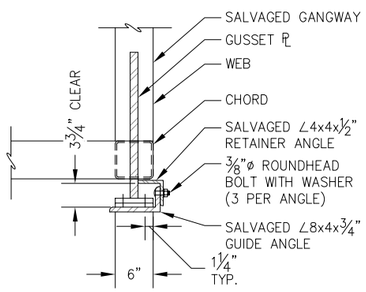

B-B: GANGWAY SHOE SECTION

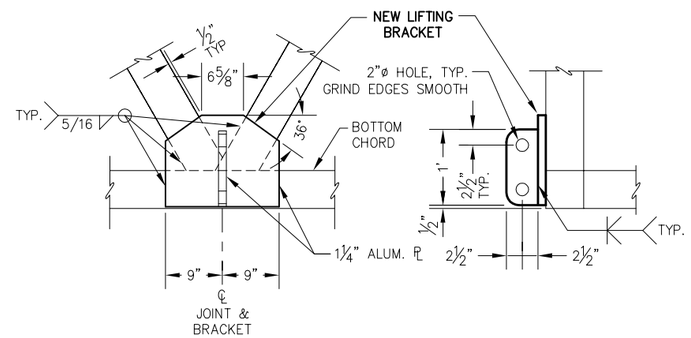

ELEVATION SIDE

NEW GANGWAY LIFTING BRACKET DETAILS

(2 TOTAL)

REVISIONS

REV.	DATE	DESCRIPTION	DWN.	CKD.	APP.

PND ENGINEERS, INC.
9360 Glacier Highway Suite 100
Juneau, Alaska 99801
Phone: 907-586-2093
Fax: 907-586-2099
www.pndengineers.com

DESIGN: MLB CHECKED: JLD
DRAWN: PND APPROVED: CRS
SCALE: NTS

STATE OF ALASKA — 24 OCT 2012 — Charles R. Somerville — CE-8845 — REGISTERED PROFESSIONAL ENGINEER
DATE: 3/4/13

HAINES BOROUGH
LETNIKOF COVE HARBOR RENOVATION

SHEET TITLE: SALVAGED GANGWAY DETAILS

PND PROJECT NO.: 112091 DWG. FILE: 2.06_.DWG

L2.06
SHEET 11 OF 24

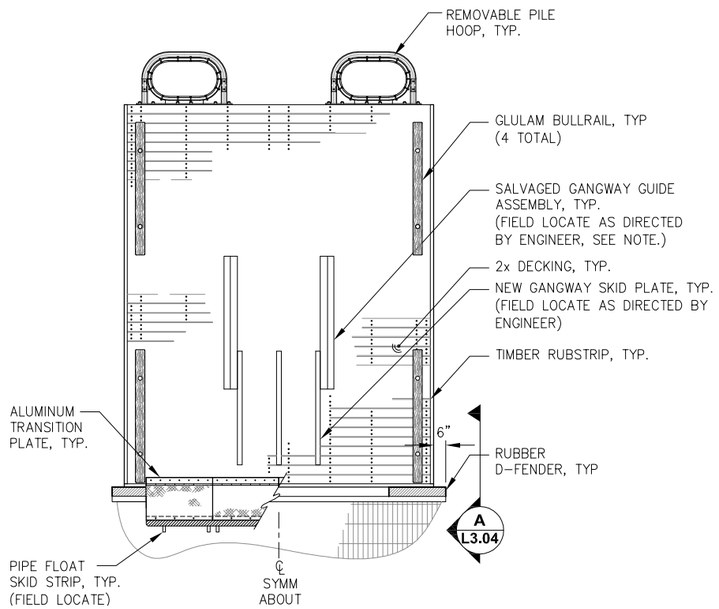

GANGWAY LANDING FLOAT - DECK PLAN

NOTE: INITIALLY CENTER GANGWAY GUIDES ON FLOAT AND TEMPORARILY ANCHOR TO DECK, ADJUST GUIDES ACCORDINGLY AFTER OBSERVING THROUGH SEVERAL TIDE CYCLES TO ENSURE PROPER POSITIONING. PERMANENTLY ATTACH GANGWAY GUIDES TO FLOAT AT ENGINEERS DIRECTION.

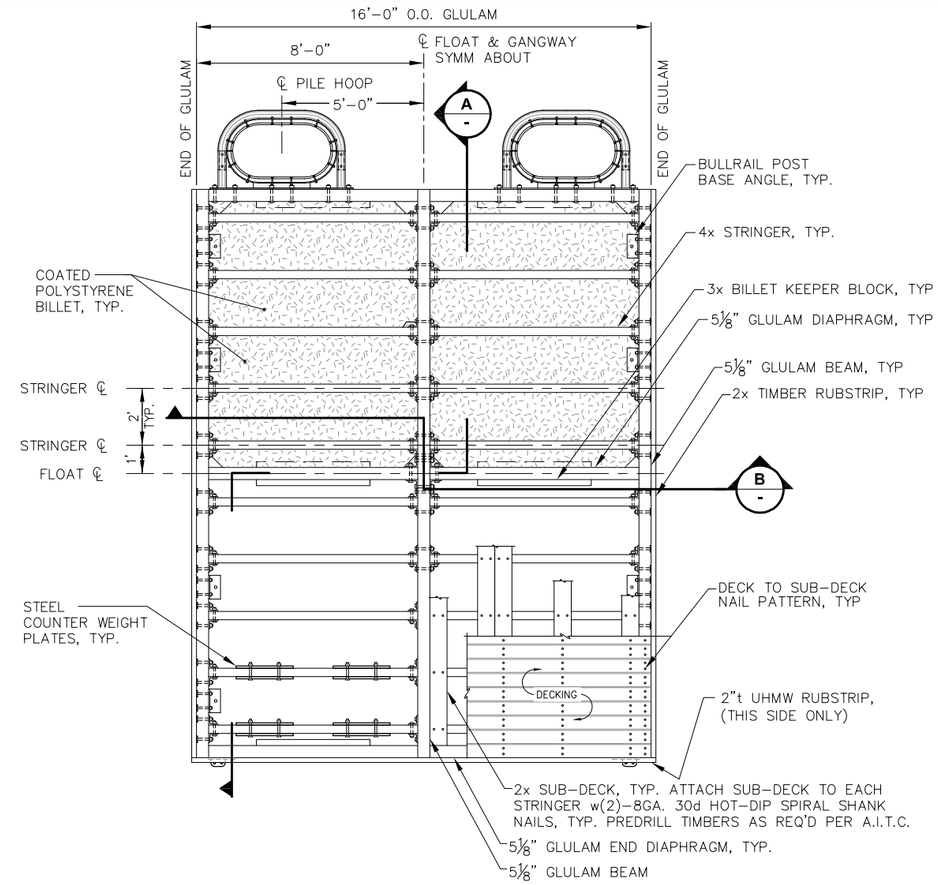

GANGWAY LANDING FLOAT - FRAMING PLAN

NOTE: NOT ALL FLOTATION BILLETS SHOWN FOR CLARITY.

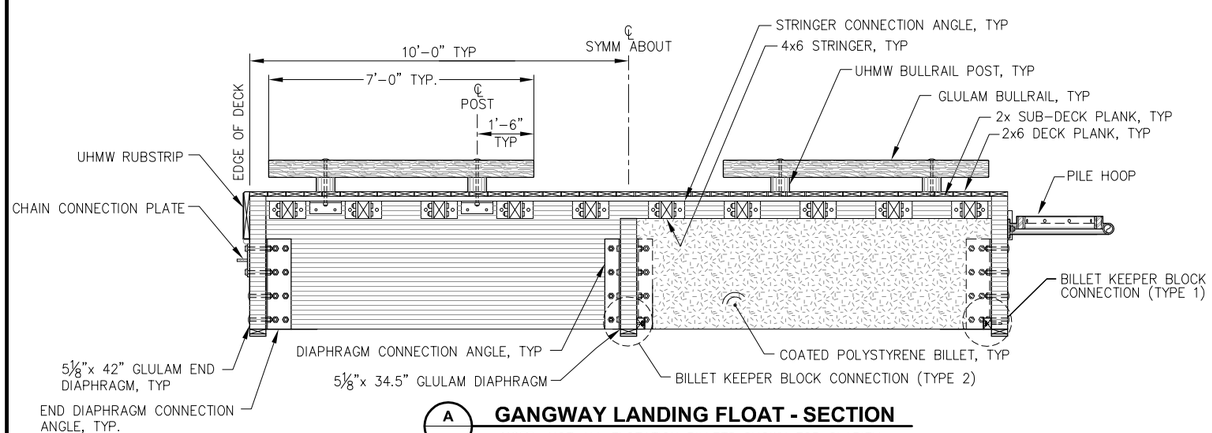

A - GANGWAY LANDING FLOAT - SECTION

NOTE: NOT ALL FLOTATION BILLETS SHOWN FOR CLARITY.

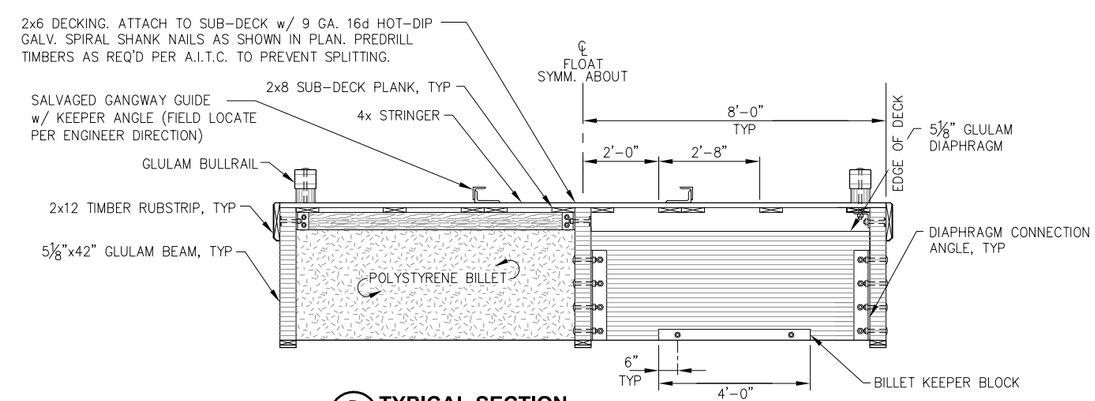

B - TYPICAL SECTION

NOTE: NOT ALL FLOATATION BILLETS SHOWN FOR CLARITY.

REVISIONS

REV.	DATE	DESCRIPTION	DWN.	CKD.	APP.

PND ENGINEERS, INC.
9360 Glacier Highway Suite 100
Juneau, Alaska 99801
Phone: 907-586-2093
Fax: 907-586-2099
www.pndengineers.com

DESIGN: MLB CHECKED: MS
DRAWN: PND APPROVED: CRS
SCALE: NTS
DATE: 3/4/13

STATE OF ALASKA 2191 Charles R. Somerville CE-8845 REGISTERED PROFESSIONAL ENGINEER

HAINES BOROUGH
LETNIKOF COVE HARBOR RENOVATION

SHEET TITLE:
GANGWAY LANDING FLOAT FRAMING PLAN AND DETAILS

PND PROJECT NO.: 112091 DWG. FILE: 3.01-3.03.DWG

L3.01
SHEET 12 OF 24

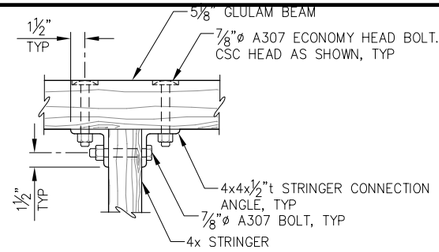

STRINGER CONNECTION - PLAN

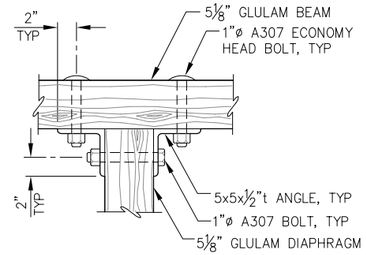

DIAPHRAGM CONNECTION - PLAN

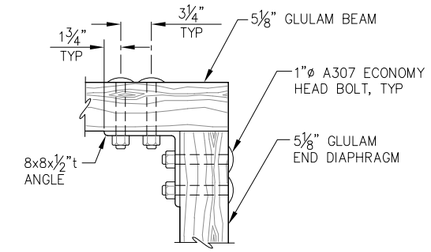

END DIAPHRAGM CONNECTION - PLAN

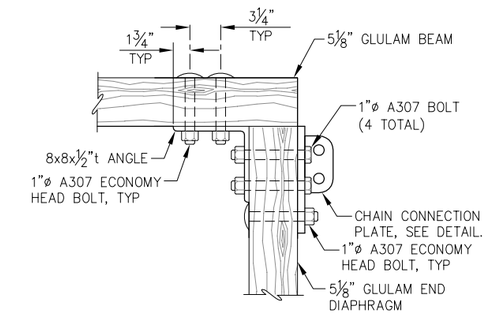

END DIAPHRAGM CONNECTION AT CHAIN CONNECTION - PLAN

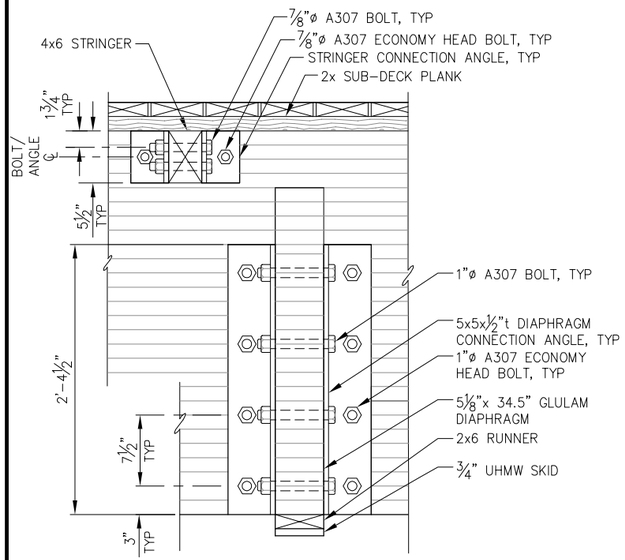

DIAPHRAGM/STRINGER CONNECTION - ELEVATION

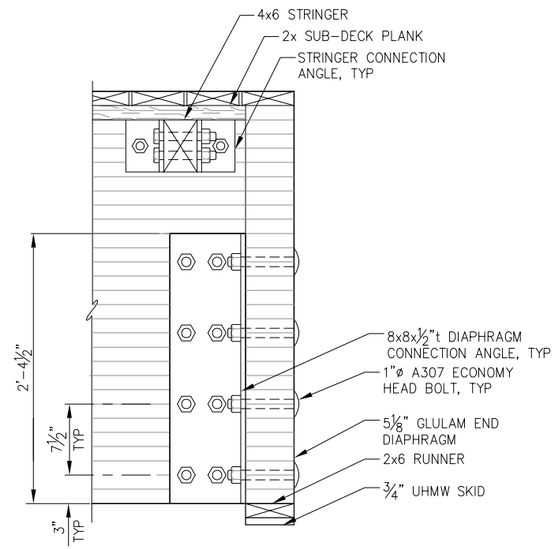

END DIAPHRAGM CONNECTION - ELEVATION

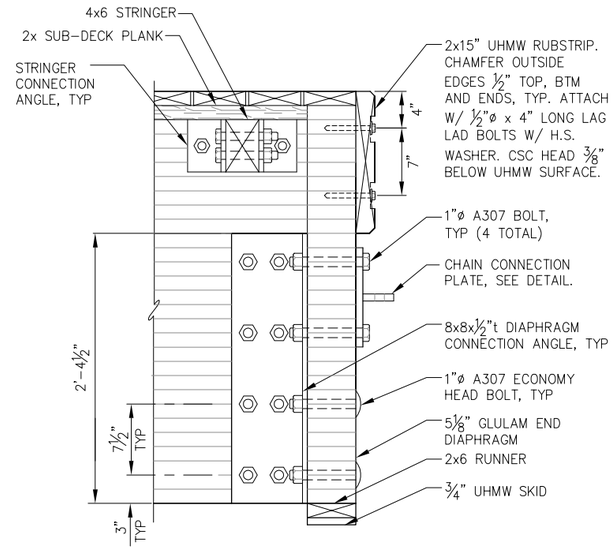

END DIAPHRAGM CONNECTION AT CHAIN CONNECTION - ELEVATION

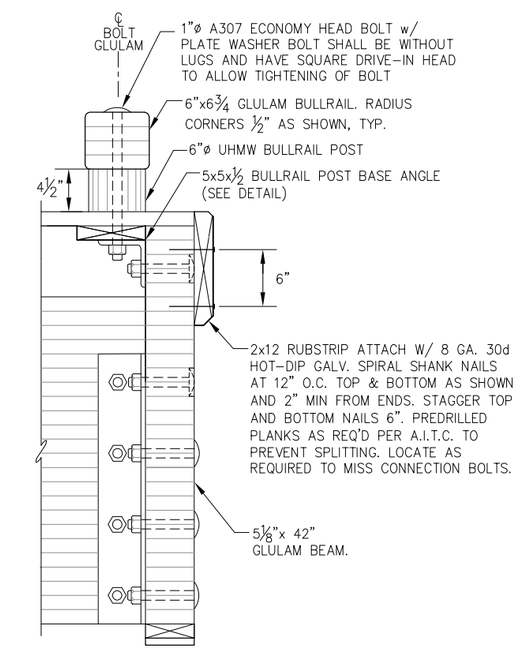

BULLRAIL & TIMBER RUBSTRIP DETAILS

(LOCATE PER GANGWAY LANDING FLOAT DECKING PLAN)

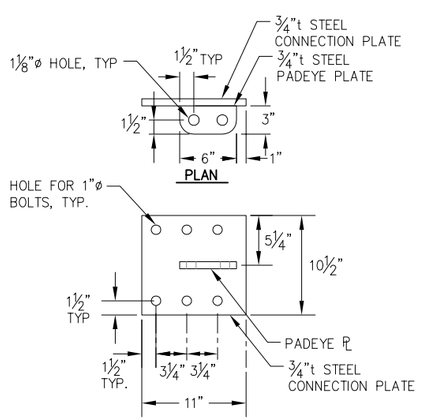

CHAIN CONNECTION PLATE DETAL

NOTE:
TIMBER RUNNER AND UHMW SKID SHALL BE ATTACHED SIMILAR TO SEGMENTAL TIMBER FLOAT DETAILS.

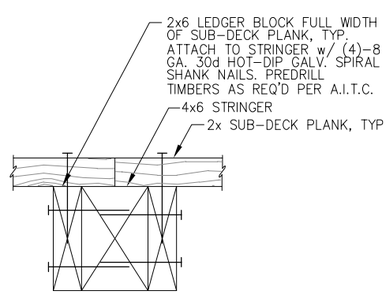

SUB-DECK SPLICE

NOTE: MAXIMUM OF (1) SPLICE PER SUB-DECK PLANK. STAGGER ADJACENT SPLICES MINIMUM OF 4-FT.

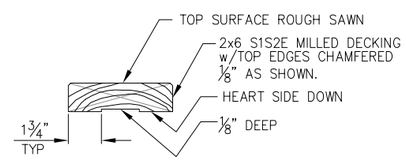

TYPICAL DECK PLANK

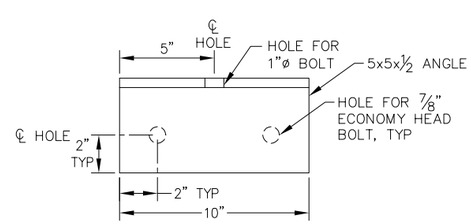

BULLRAIL POST BASE ANGLE

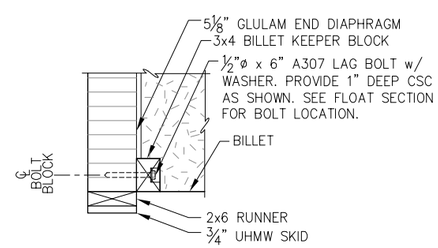

BILLET KEEPER - TYPE 1

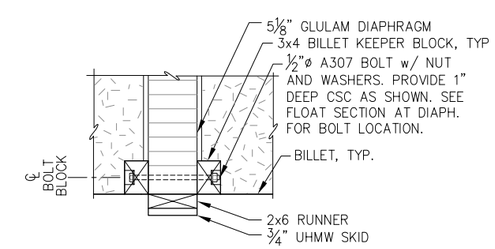

BILLET KEEPER - TYPE 2

REVISIONS

REV.	DATE	DESCRIPTION	DWN.	CKD.	APP.

PND ENGINEERS, INC.
9360 Glacier Highway Suite 100
Juneau, Alaska 99801
Phone: 907-586-2093
Fax: 907-586-2099
www.pndengineers.com

DESIGN: MLB CHECKED: MS
DRAWN: PND APPROVED: CRS
SCALE: NTS
DATE: 3/4/13

STATE OF ALASKA 2010 Charles R. Somerville CE-8845 REGISTERED PROFESSIONAL ENGINEER

HAINES BOROUGH
LETNIKOF COVE HARBOR RENOVATION

SHEET TITLE: GANGWAY LANDING FLOAT DETAILS

PND PROJECT NO.: 112091 DWG. FILE: 3.01-3.03.DWG

L3.02
SHEET 13 OF 24

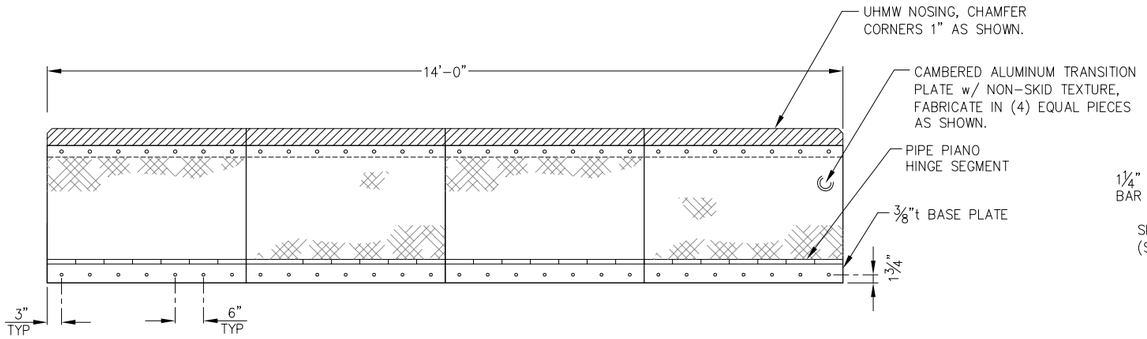

TRANSITION PLATE PLAN

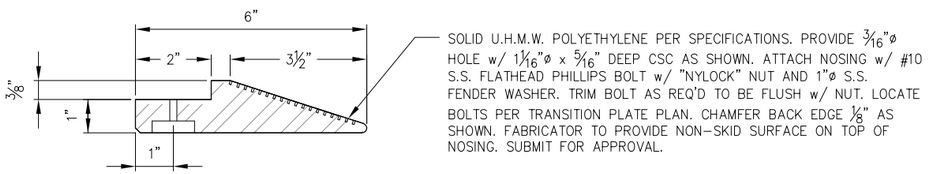

UHMW NOSING - TYPE B

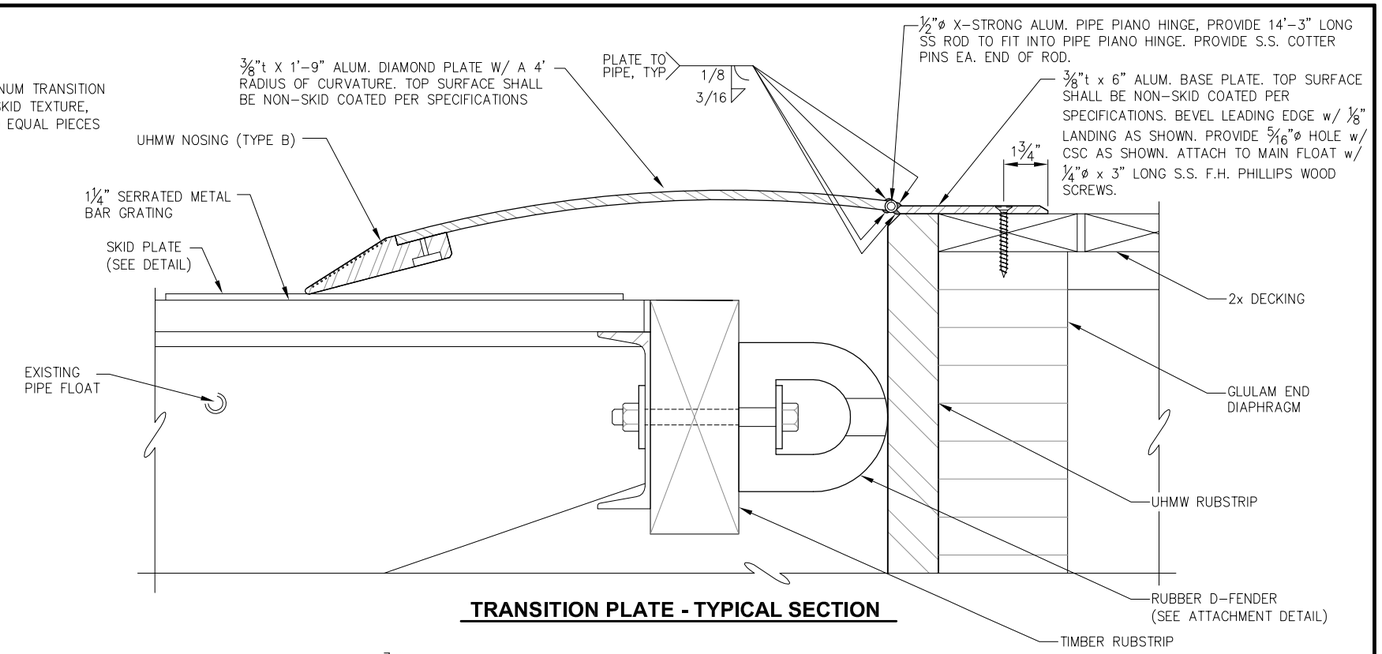

TRANSITION PLATE - TYPICAL SECTION

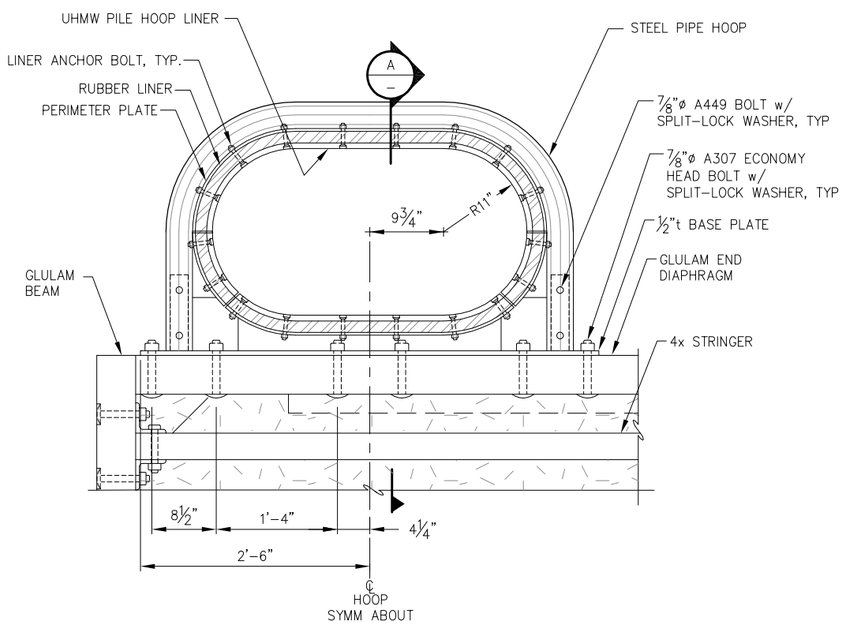

TYPICAL PILE HOOP - PLAN

NOTE: DETAILS NOT SHOWN SIMILAR TO SEGMENTAL TIMBER FLOAT PILE HOOP.

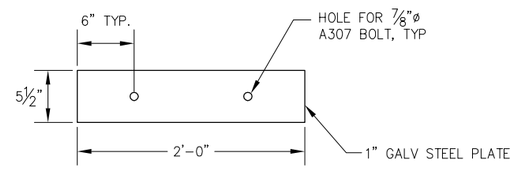

COUNTERWEIGHT PLATE DETAILS

(16 TOTAL) **NOTE:** PLATE WEIGHT IS APPROXIMATELY 40 LBS.

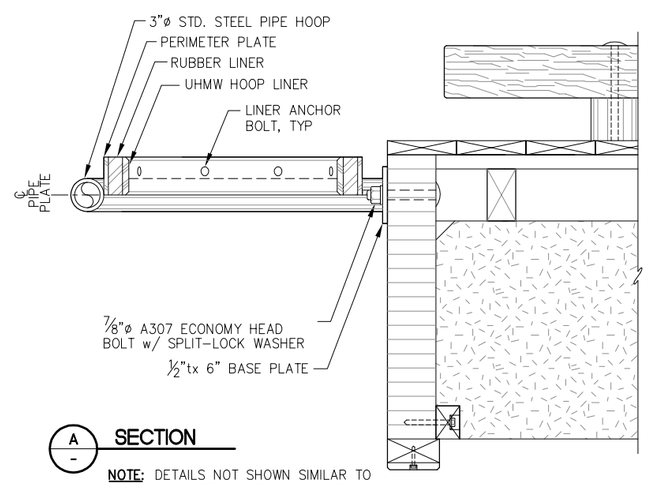

A SECTION

NOTE: DETAILS NOT SHOWN SIMILAR TO SEGMENTAL TIMBER FLOAT PILEHOOP.

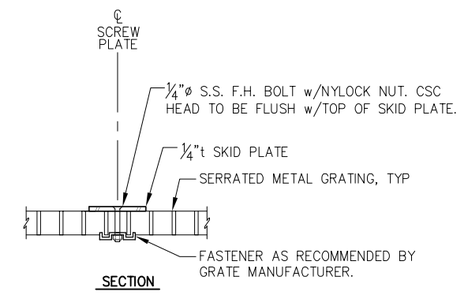

SECTION

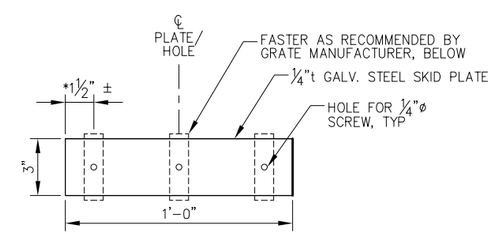

PLAN

PIPE FLOAT SKID PLATE

(8 TOTAL REQ'D)

* **NOTE:** CONTRACTOR TO FIELD VERIFY DRILLED HOLE LOCATIONS AS REQUIRED TO CLEAR GRATE BEARING BARS.

REVISIONS

REV.	DATE	DESCRIPTION	DWN.	CKD.	APP.

PND ENGINEERS, INC.
9360 Glacier Highway Suite 100
Juneau, Alaska 99801
Phone: 907-586-2093
Fax: 907-586-2099
www.pndengineers.com

DESIGN: MLB CHECKED: BMI
DRAWN: PND APPROVED: CRS
SCALE: NTS

STATE OF ALASKA — 24 010 — Charles R. Somerville — CE-8845 — REGISTERED PROFESSIONAL ENGINEER
DATE: 3/4/13

HAINES BOROUGH
LETNIKOF COVE HARBOR RENOVATION

SHEET TITLE: **GANGWAY LANDING FLOAT DETAILS**

PND PROJECT NO.: 112091 DWG. FILE: 3.01-3.03.DWG

L3.03
SHEET 14 OF 24

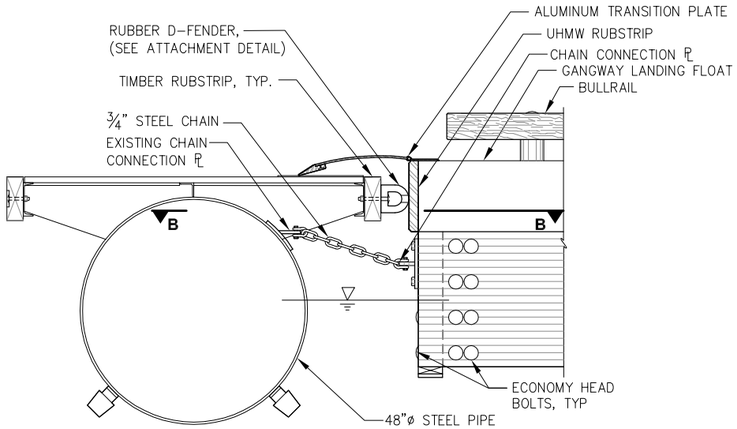

A ELEVATION

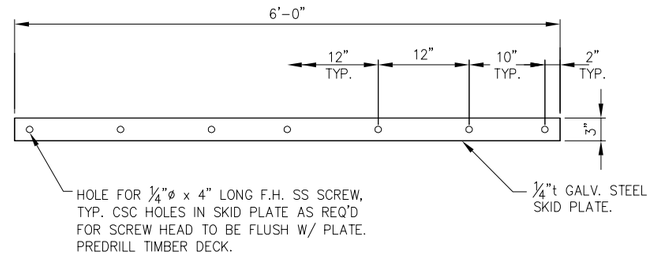

NEW GANGWAY SKID PLATE DETAIL
(3 TOTAL REQ'D)

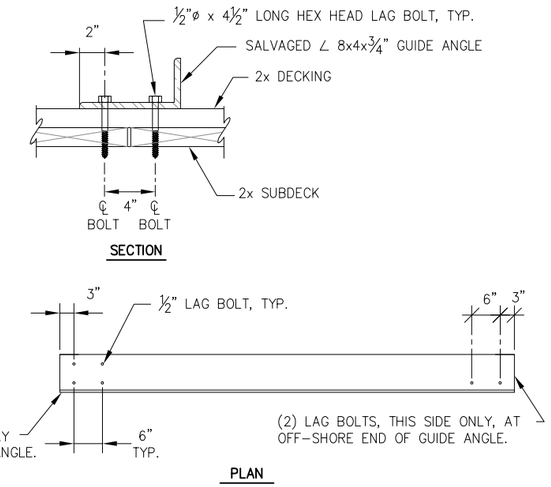

GANGWAY GUIDE ANGLE ATTACHMENT

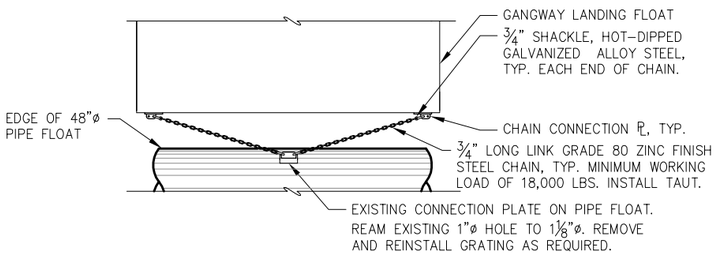

B-B: CONNECTION TO PIPE FLOAT

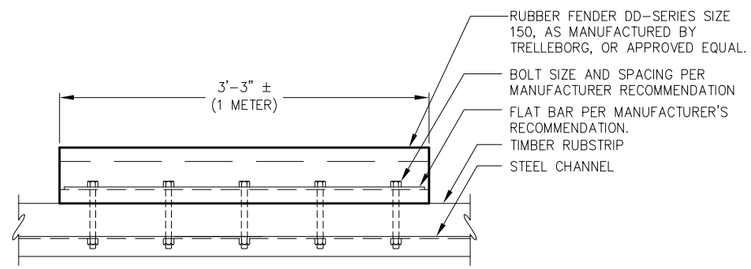

RUBBER FENDER ATTACHMENT DETAIL

REVISIONS

REV.	DATE	DESCRIPTION	DWN.	CKD.	APP.

PND ENGINEERS, INC.
9360 Glacier Highway Suite 100
Juneau, Alaska 99801
Phone: 907-586-2093
Fax: 907-586-2099
www.pndengineers.com

DESIGN: MLB CHECKED: MS
DRAWN: PND APPROVED: CRS
SCALE: NTS

STATE OF ALASKA — Charles R. Somerville — CE-8845 — REGISTERED PROFESSIONAL ENGINEER
DATE: 3/4/13

HAINES BOROUGH
LETNIKOF COVE HARBOR RENOVATION

SHEET TITLE:
GANGWAY LANDING FLOAT DETAILS

PND PROJECT NO.: 112091 DWG. FILE: 3.04_.DWG

L3.04
SHEET 15 OF 24

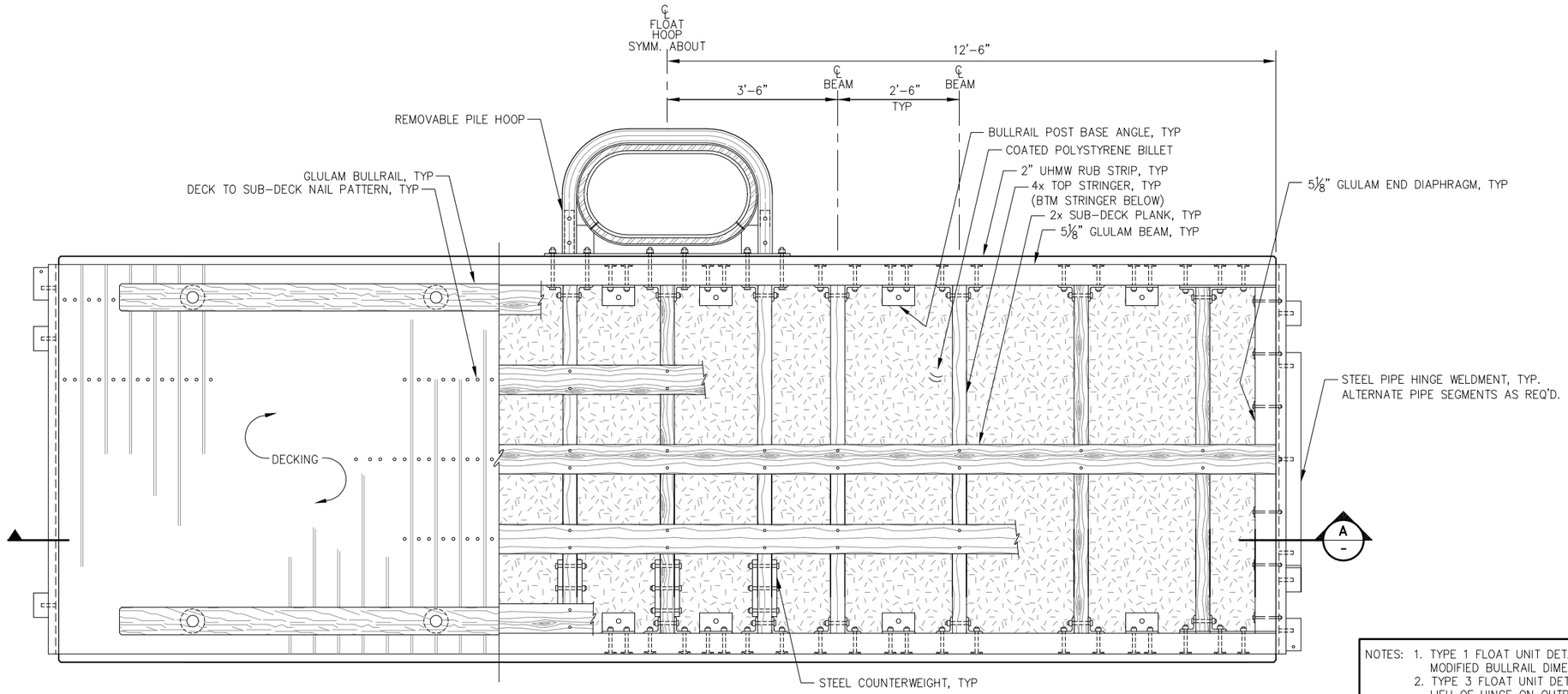

TYPE 2 FLOAT UNIT - PLAN

NOTES:
1. TYPE 1 FLOAT UNIT DETAILS SIMILAR TO TYPE 2 FLOAT UNIT w/ MODIFIED BULLRAIL DIMENSIONS AND HINGE CONNECTION.
2. TYPE 3 FLOAT UNIT DETAILS SIMILAR TO TYPE 2 FLOAT. IN LIEU OF HINGE ON OUTBOARD END INSTALL UHMW RUBSTRIP AND GLULAM BULLRAIL FULL WIDTH ACROSS END OF FLOAT.

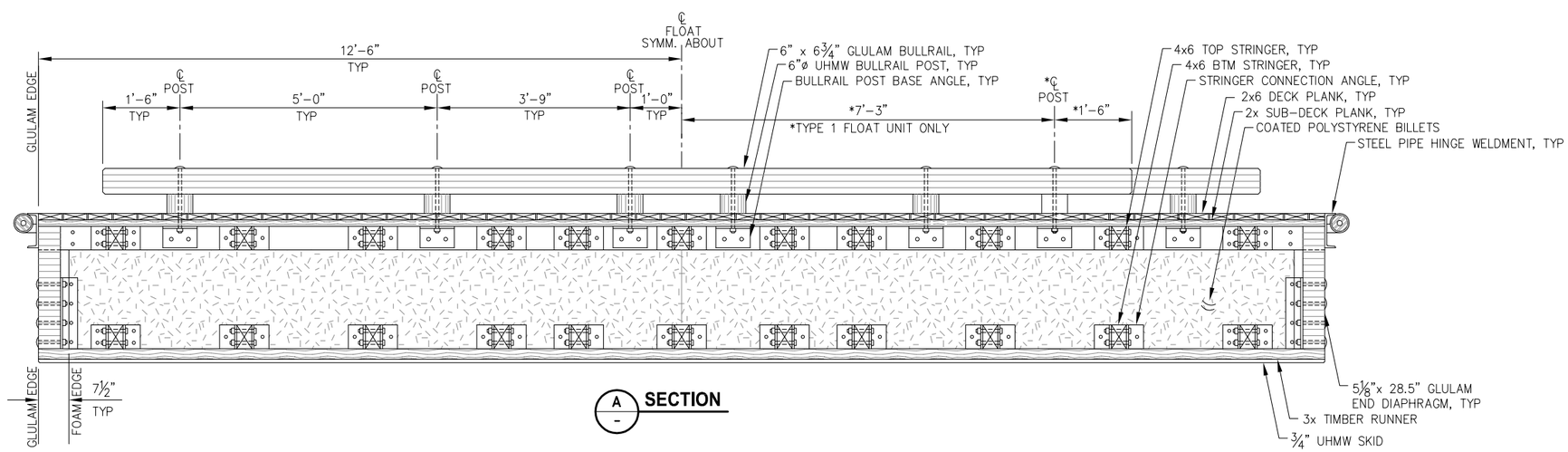

A SECTION

HAINES BOROUGH ALASKA

REVISIONS

REV.	DATE	DESCRIPTION	DWN.	CKD.	APP.

PND ENGINEERS, INC.
9360 Glacier Highway Suite 100
Juneau, Alaska 99801
Phone: 907-586-2093
Fax: 907-586-2099
www.pndengineers.com

DESIGN: BMI CHECKED: MLB
DRAWN: BMI APPROVED: CRS
SCALE: NTS

STATE OF ALASKA — Charles R. Somerville — CE-8845 — REGISTERED PROFESSIONAL ENGINEER
DATE: 3/4/13

HAINES BOROUGH
LETNIKOF COVE HARBOR RENOVATION

SHEET TITLE: **SEGMENTAL TIMBER FLOAT FRAMING PLAN**

PND PROJECT NO.: 112091 DWG. FILE: 3.05.DWG

L3.05

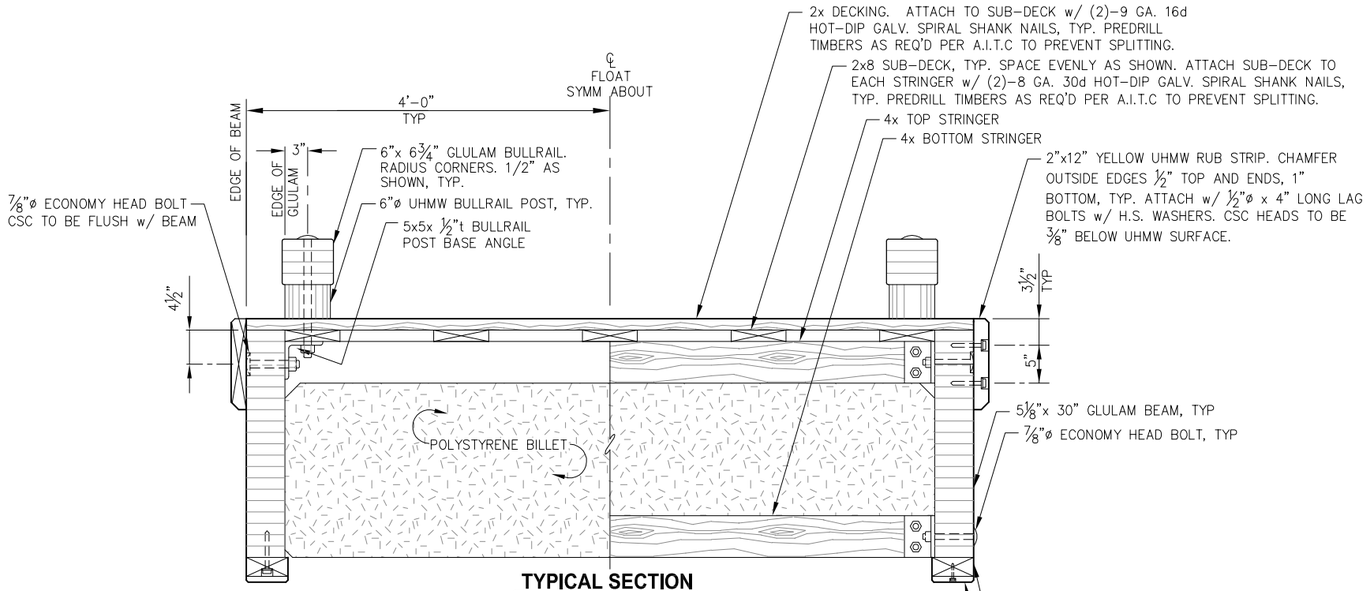

TYPICAL SECTION

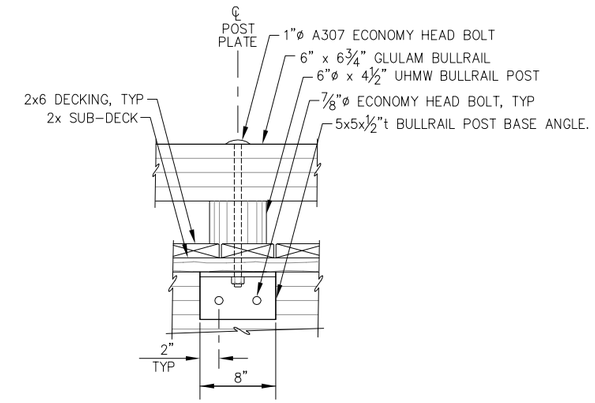

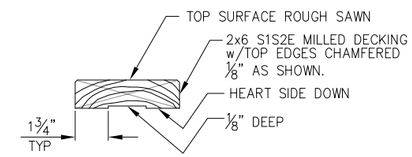

TYPICAL DECK PLANK

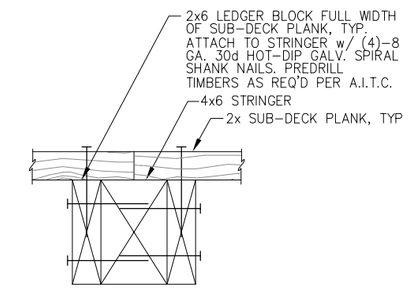

SUB-DECK SPLICE

NOTE: MAXIMUM OF (1) SPLICE PER SUB-DECK PLANK. STAGGER ADJACENT SPLICES MINIMUM OF 4-FT.

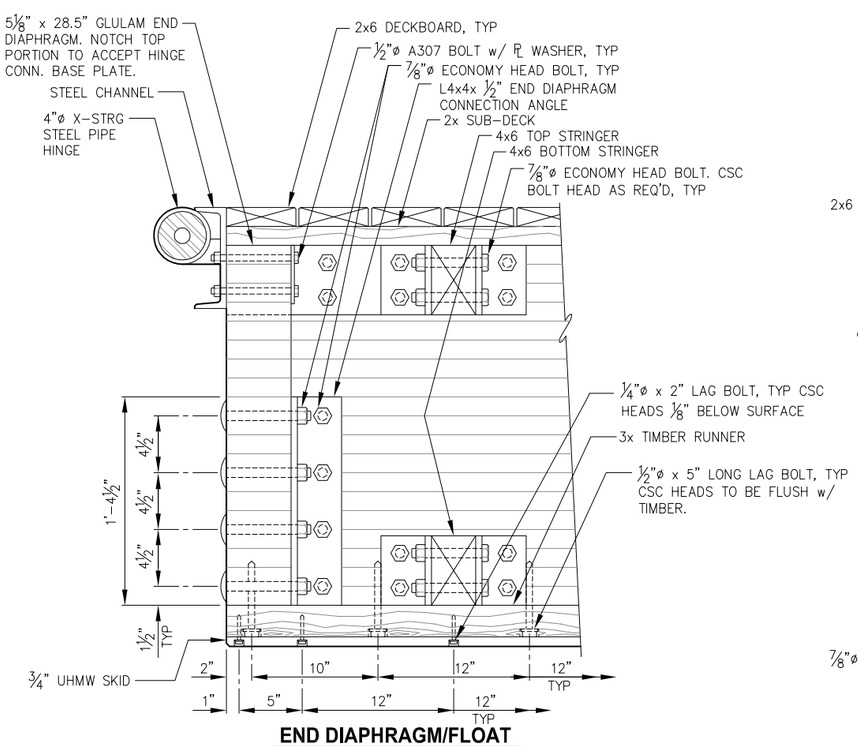

END DIAPHRAGM/FLOAT CONNECTION PROFILE

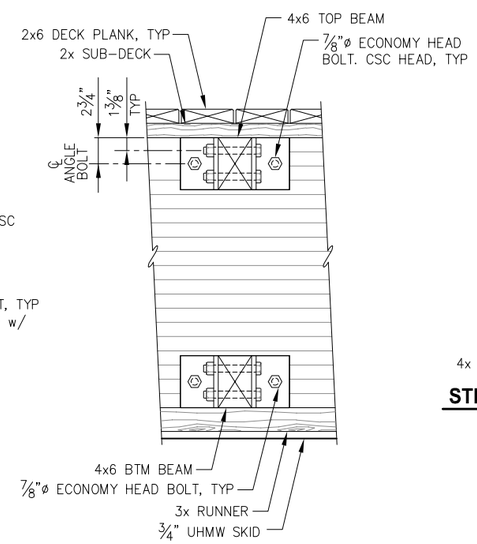

STRINGER CONNECTION - PROFILE

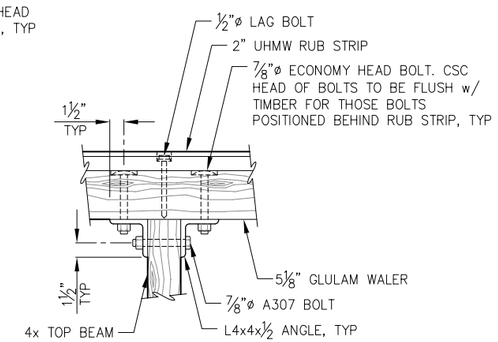

STRINGER CONNECTION - PLAN

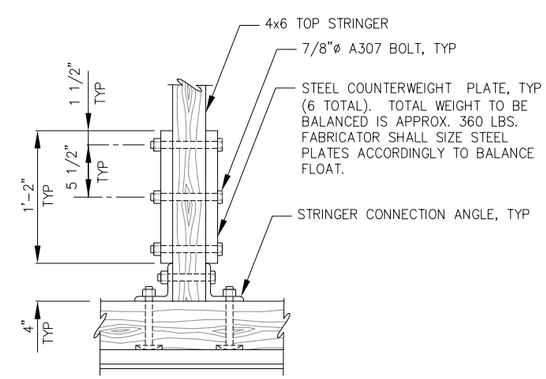

STEEL COUNTER WEIGHT - PLAN

REVISIONS

REV.	DATE	DESCRIPTION	DWN.	CKD.	APP.

PND ENGINEERS, INC.
9360 Glacier Highway Suite 100
Juneau, Alaska 99801
Phone: 907-586-2093
Fax: 907-586-2099
www.pndengineers.com

DESIGN: BMI CHECKED: MLB
DRAWN: BMI APPROVED: CRS
SCALE: NTS

STATE OF ALASKA 2191 Charles R. Somerville CE-8845 REGISTERED PROFESSIONAL ENGINEER
DATE: 3/4/13

HAINES BOROUGH
LETNIKOF COVE HARBOR RENOVATION

SHEET TITLE: **SEGMENTAL TIMBER FLOAT DETAILS**

PND PROJECT NO.: 112091 DWG. FILE: 3.06.DWG

L3.06

SHEET 17 OF 24

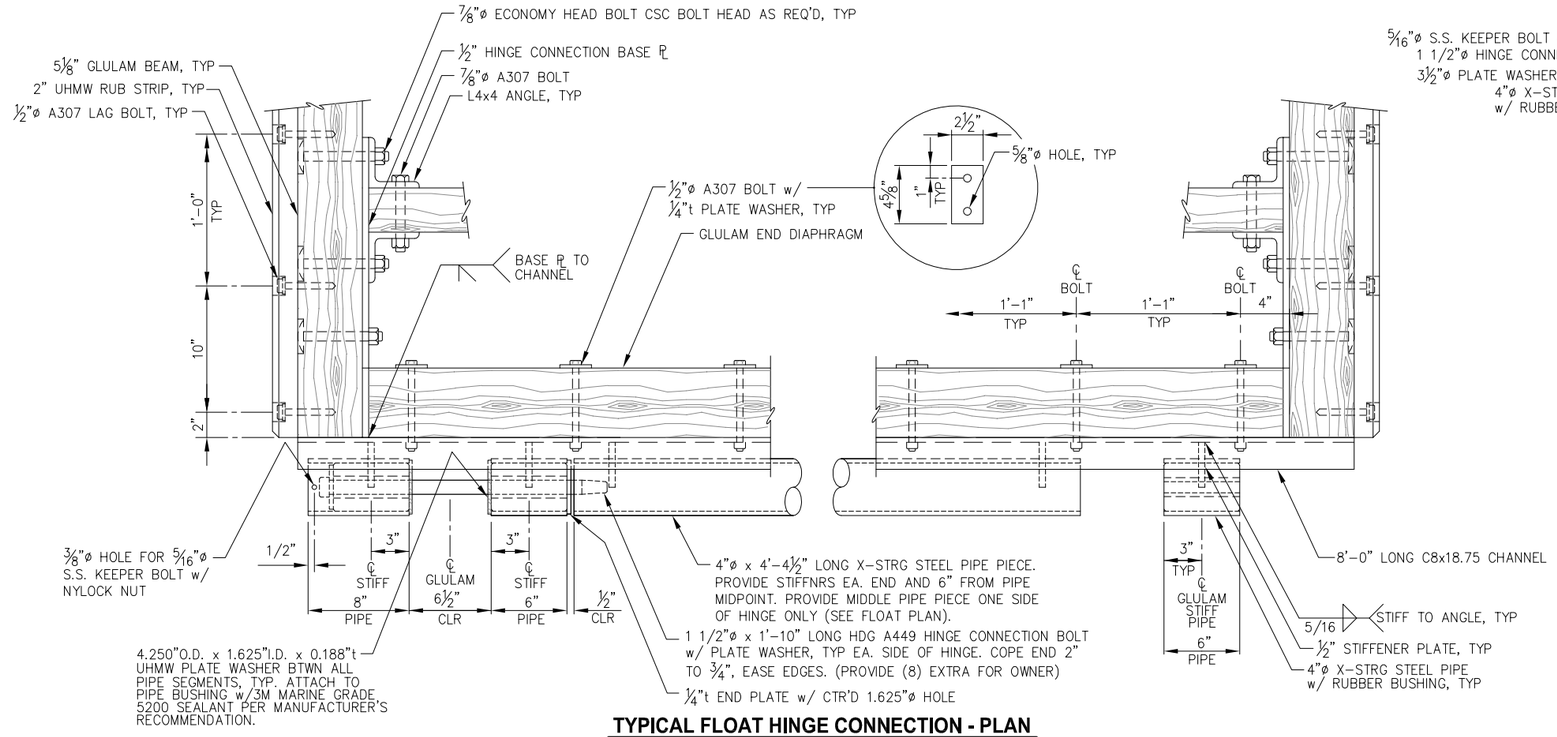

TYPICAL FLOAT HINGE CONNECTION - PLAN

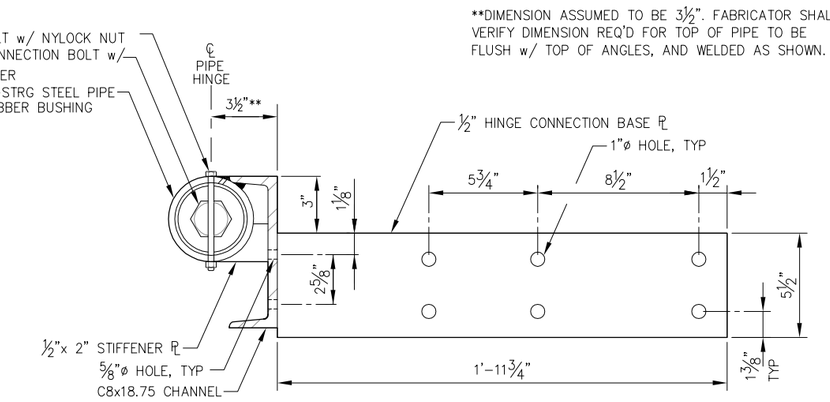

**DIMENSION ASSUMED TO BE 3 1/2". FABRICATOR SHALL VERIFY DIMENSION REQ'D FOR TOP OF PIPE TO BE FLUSH w/ TOP OF ANGLES, AND WELDED AS SHOWN.

HINGE CONNECTION SECTION

NOTE: TOP WALKING SURFACE OF PIANO HINGE WELDMENTS SHALL BE COATED WITH NON-SKID SURFACE PER SPECIFICATIONS.

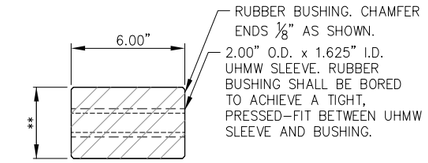

TYPICAL PIPE HINGE RUBBER BUSHING

**SEE SPECIFICATIONS FOR DIAMETER REQUIREMENTS

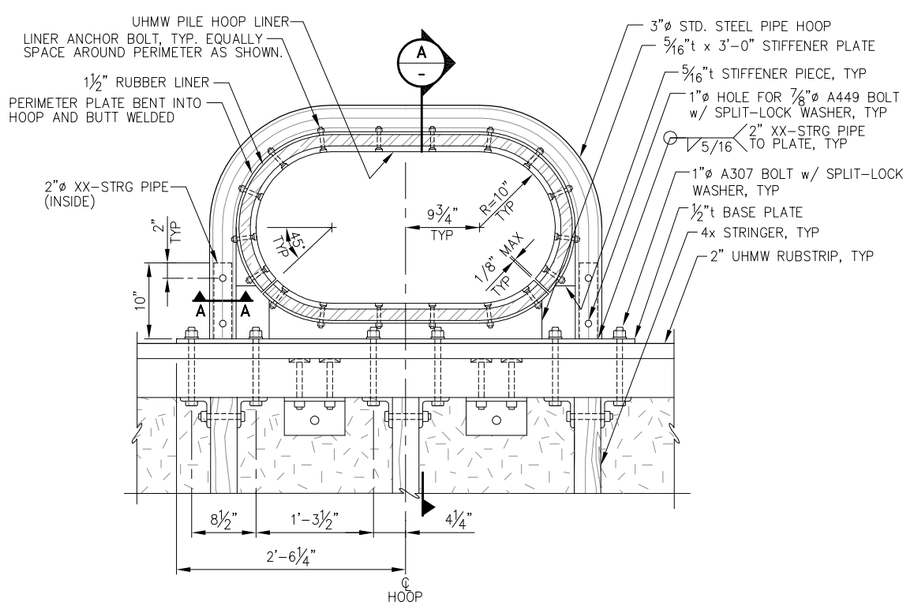

REMOVABLE PILE HOOP - PLAN

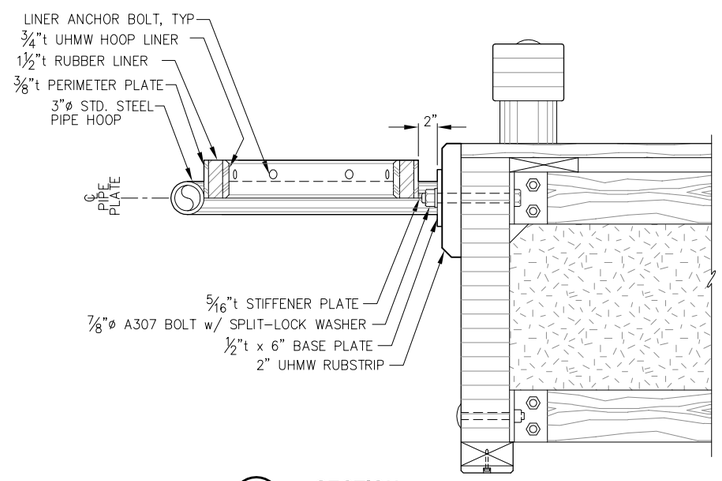

A - SECTION

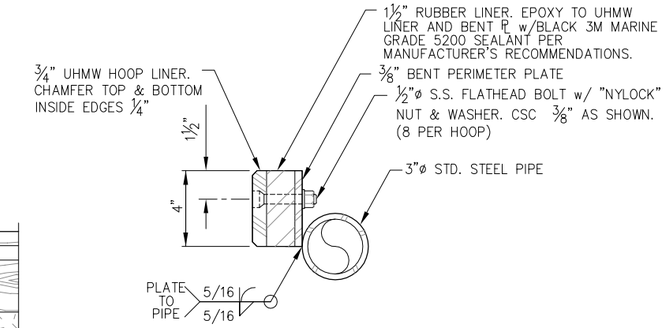

TYPICAL HOOP SECTION

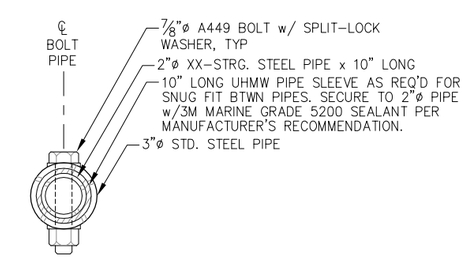

REMOVABLE PIPE SECTION - A-A

HAINES BOROUGH ALASKA

REVISIONS

REV.	DATE	DESCRIPTION	DWN.	CKD.	APP.

PND ENGINEERS, INC.
9360 Glacier Highway Suite 100
Juneau, Alaska 99801
Phone: 907-586-2093
Fax: 907-586-2099
www.pndengineers.com

DESIGN: BMI CHECKED: MLB
DRAWN: BMI APPROVED: CRS
SCALE: NTS

STATE OF ALASKA — Charles R. Somerville — CE-8845 — REGISTERED PROFESSIONAL ENGINEER
DATE: 3/4/13

HAINES BOROUGH
LETNIKOF COVE HARBOR RENOVATION

SHEET TITLE: **SEGMENTAL TIMBER FLOAT DETAILS**

PND PROJECT NO.: 112091 DWG. FILE: 3.07.DWG

L3.07

SHEET 18 OF 24

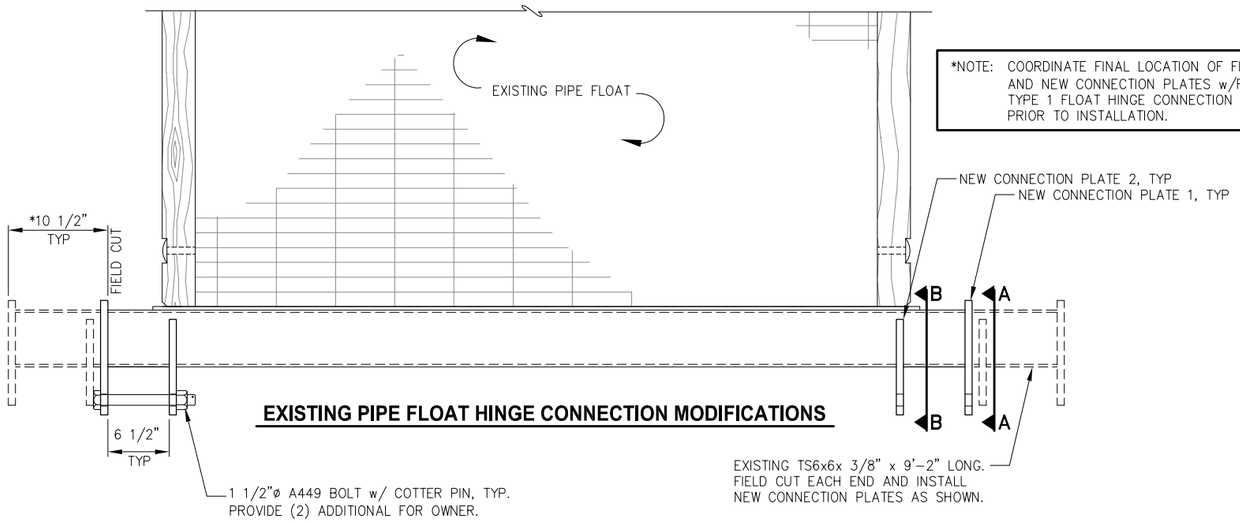

*NOTE: COORDINATE FINAL LOCATION OF FIELD CUT AND NEW CONNECTION PLATES w/FABRICATED TYPE 1 FLOAT HINGE CONNECTION WELDMENT PRIOR TO INSTALLATION.

EXISTING PIPE FLOAT HINGE CONNECTION MODIFICATIONS

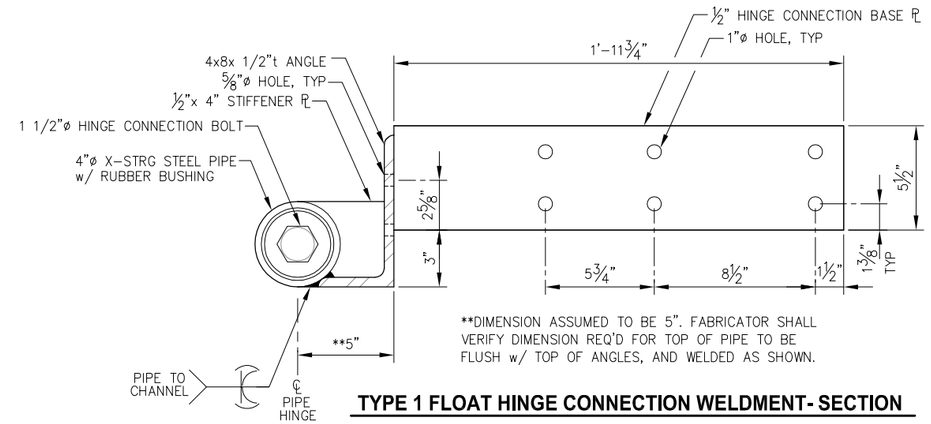

**DIMENSION ASSUMED TO BE 5". FABRICATOR SHALL VERIFY DIMENSION REQ'D FOR TOP OF PIPE TO BE FLUSH w/ TOP OF ANGLES, AND WELDED AS SHOWN.

TYPE 1 FLOAT HINGE CONNECTION WELDMENT- SECTION

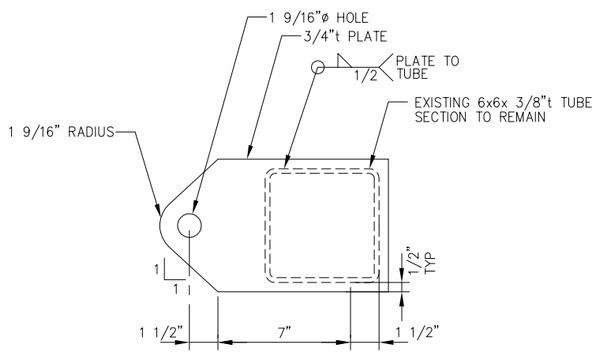

A-A: CONNECTION PLATE TYPE 1

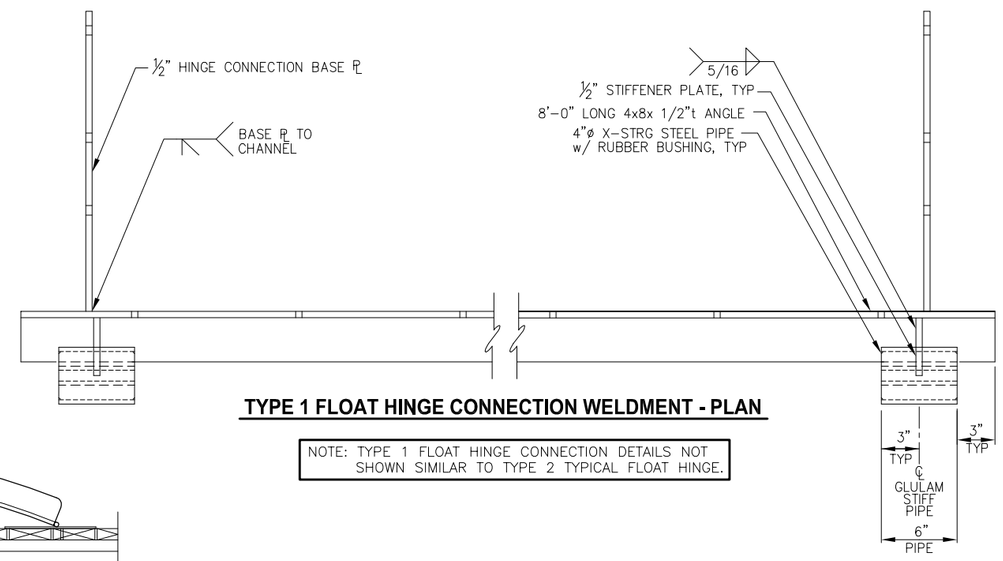

TYPE 1 FLOAT HINGE CONNECTION WELDMENT - PLAN

NOTE: TYPE 1 FLOAT HINGE CONNECTION DETAILS NOT SHOWN SIMILAR TO TYPE 2 TYPICAL FLOAT HINGE.

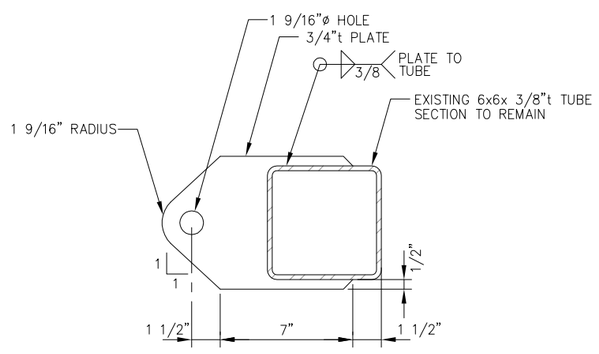

B-B: CONNECTION PLATE TYPE 2

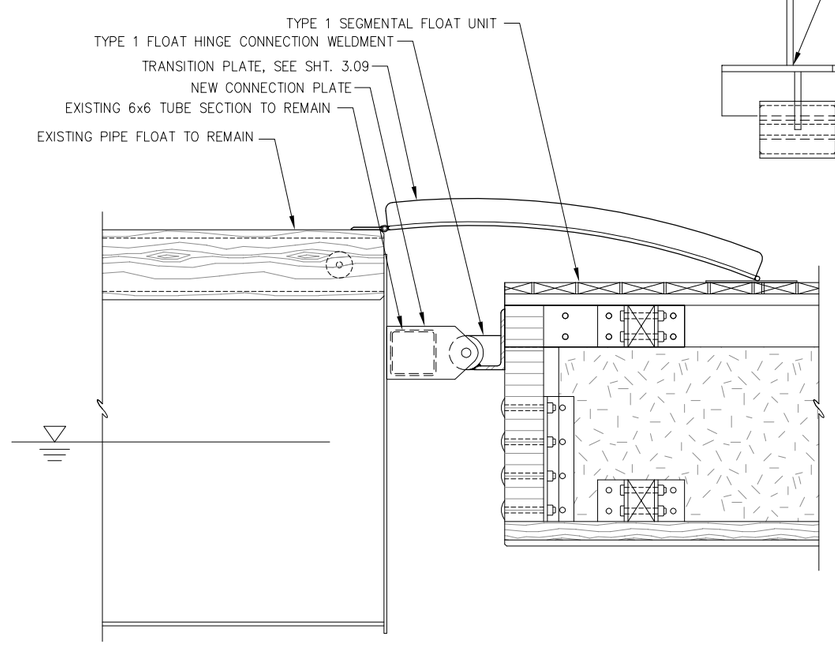

TYPE 1 FLOAT HINGE CONNECTION TO PIPE FLOAT- PROFILE

REVISIONS

REV.	DATE	DESCRIPTION	DWN.	CKD.	APP.

PND ENGINEERS, INC.
9360 Glacier Highway Suite 100
Juneau, Alaska 99801
Phone: 907-586-2093
Fax: 907-586-2099
www.pndengineers.com

DESIGN: BMI CHECKED: MLB
DRAWN: BMI APPROVED: CRS
SCALE: NTS

STATE OF ALASKA — Charles R. Somerville — CE-8845 — REGISTERED PROFESSIONAL ENGINEER
DATE: 3/4/13

HAINES BOROUGH
LETNIKOF COVE HARBOR RENOVATION

SHEET TITLE: SEGMENTAL TIMBER FLOAT DETAILS

PND PROJECT NO.: 112091 DWG. FILE: 3.08.DWG

L3.08
SHEET 19 OF 24

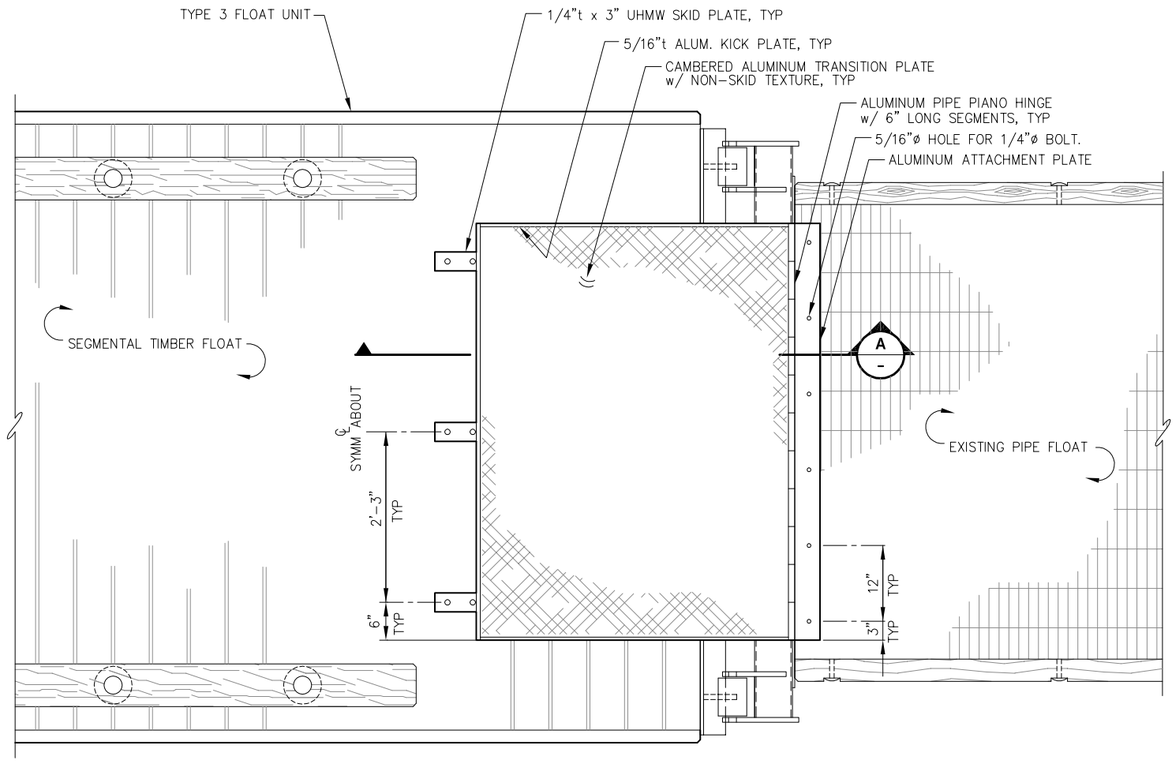

TRANSITION PLATE - PLAN

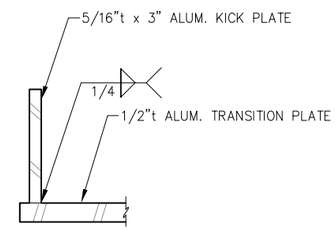

B - KICK PLATE - SECTION

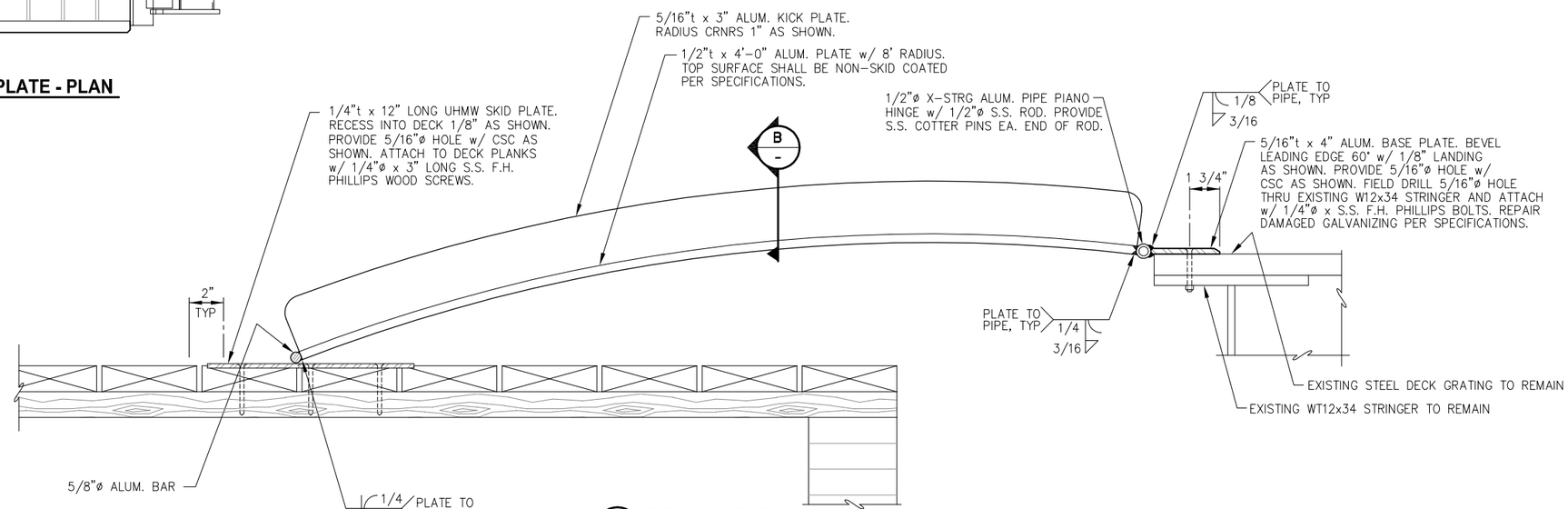

A - TYPICAL SECTION

NOTE: NOT ALL MOORAGE FLOAT DETAILS SHOWN.

REVISIONS

REV.	DATE	DESCRIPTION	DWN.	CKD.	APP.

PND ENGINEERS, INC.
9360 Glacier Highway Suite 100
Juneau, Alaska 99801
Phone: 907-586-2093
Fax: 907-586-2099
www.pndengineers.com

DESIGN: PND CHECKED: MLB
DRAWN: PND APPROVED: CRS
SCALE: NTS

STATE OF ALASKA 8917 Charles R. Somerville CE-8845 REGISTERED PROFESSIONAL ENGINEER
DATE: 3/4/13

HAINES BOROUGH
LETNIKOF COVE HARBOR RENOVATION

SHEET TITLE: **SEGMENTAL TIMBER FLOAT DETAILS**

PND PROJECT NO.: 112091 DWG. FILE: 3.09.DWG

L3.09

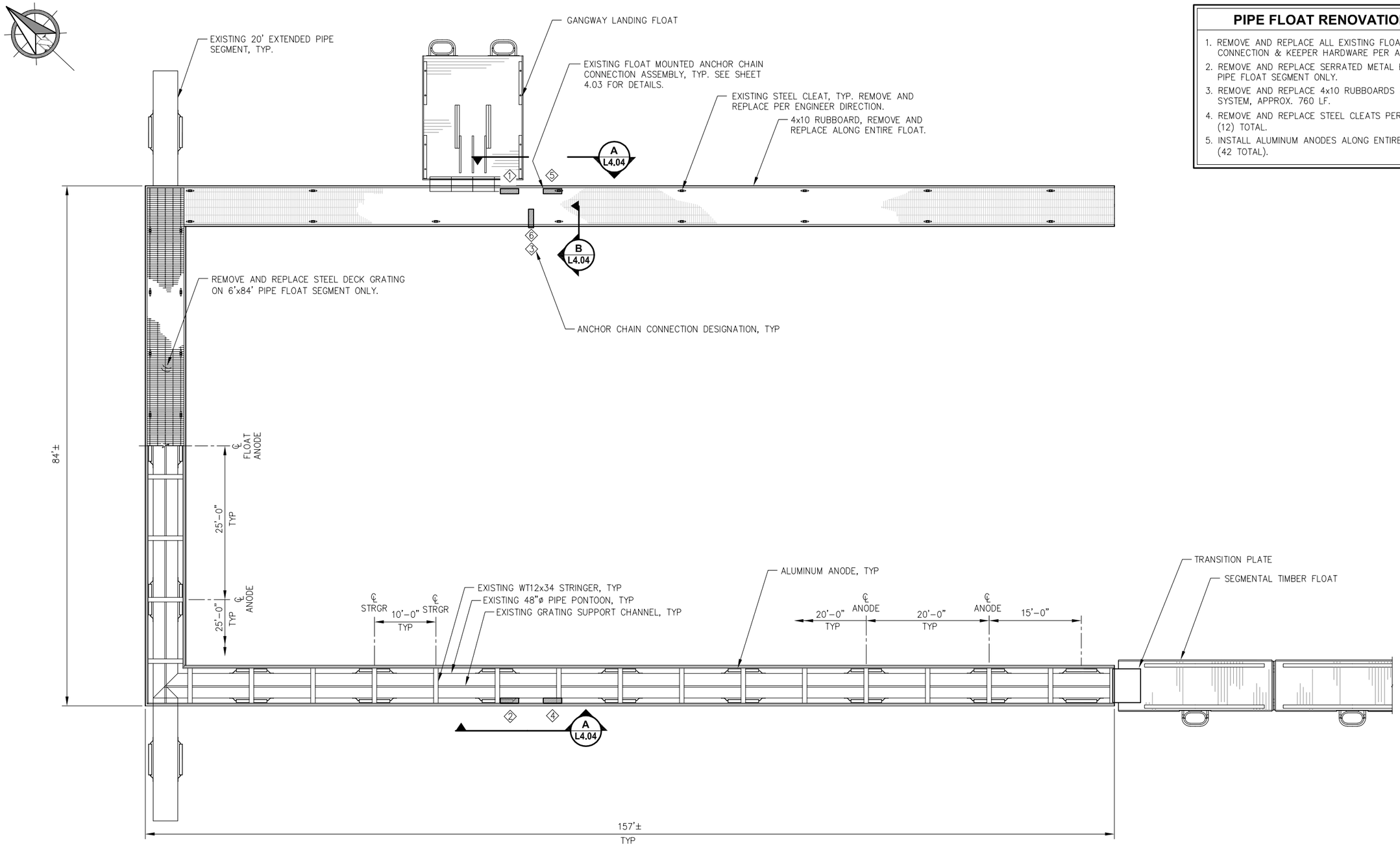

PIPE FLOAT RENOVATION - PLAN

PIPE FLOAT RENOVATION SUMMARY

1. REMOVE AND REPLACE ALL EXISTING FLOAT ANCHOR CHAINS AND CONNECTION & KEEPER HARDWARE PER ANCHOR CHAIN SCHEDULE.
2. REMOVE AND REPLACE SERRATED METAL BAR GRATING ON 6'x84' PIPE FLOAT SEGMENT ONLY.
3. REMOVE AND REPLACE 4x10 RUBBOARDS ALONG ENTIRE FLOAT SYSTEM, APPROX. 760 LF.
4. REMOVE AND REPLACE STEEL CLEATS PER ENGINEER DIRECTION, (12) TOTAL.
5. INSTALL ALUMINUM ANODES ALONG ENTIRE FLOAT SYSTEM (42 TOTAL).

REVISIONS

REV.	DATE	DESCRIPTION	DWN.	CKD.	APP.

PND ENGINEERS, INC.
9360 Glacier Highway Suite 100
Juneau, Alaska 99801
Phone: 907-586-2093
Fax: 907-586-2099
www.pndengineers.com

DESIGN: BMI CHECKED: MLB
DRAWN: BMI APPROVED: CRS
SCALE: NTS

STATE OF ALASKA 9197 Charles R. Somerville CE-8845 REGISTERED PROFESSIONAL ENGINEER
DATE: 3/4/13

HAINES BOROUGH
LETNIKOF COVE HARBOR RENOVATION

SHEET TITLE: PIPE FLOAT RENOVATION PLAN

PND PROJECT NO.: 112091 DWG. FILE: 4.01.DWG

L4.01
SHEET 21 OF 24

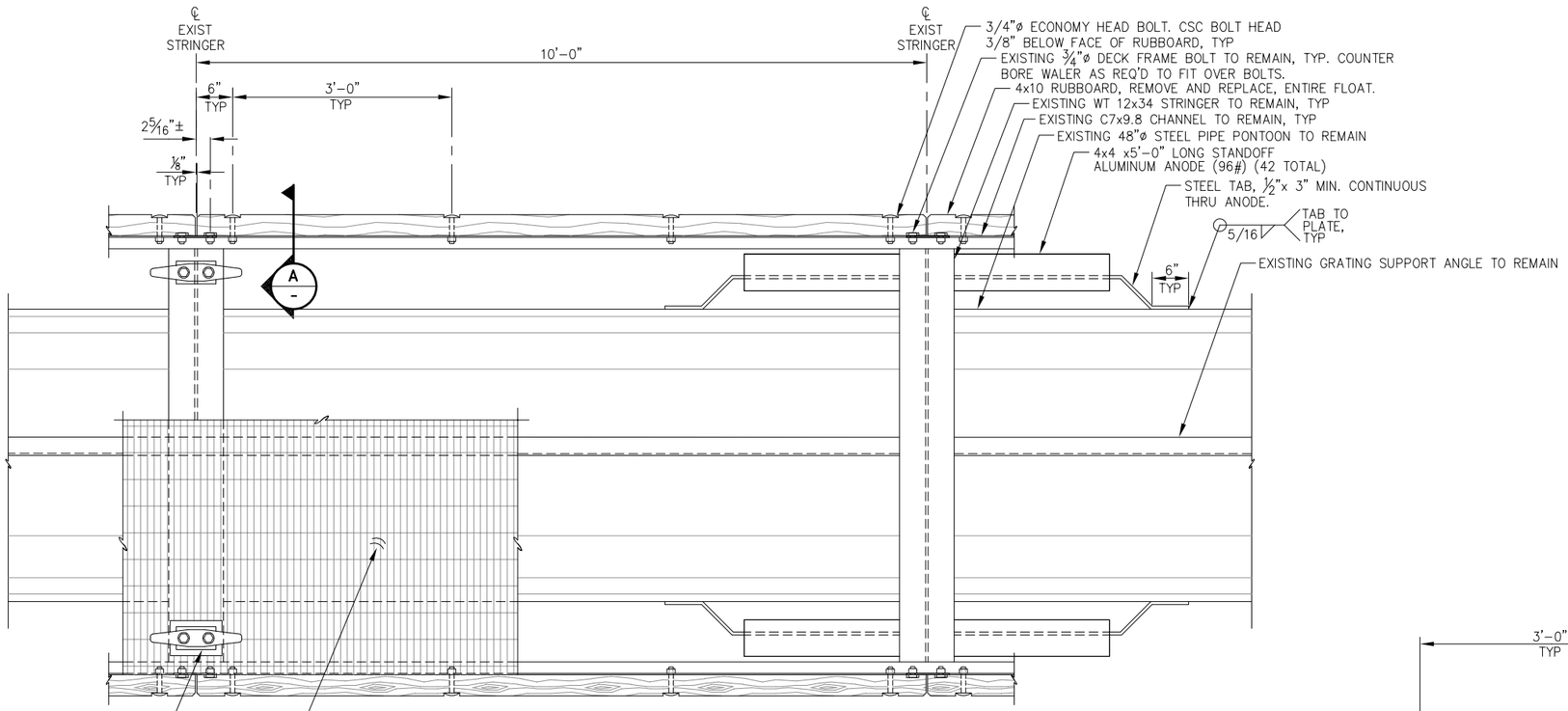

PIPE FLOAT REFURBISHMENT - PLAN

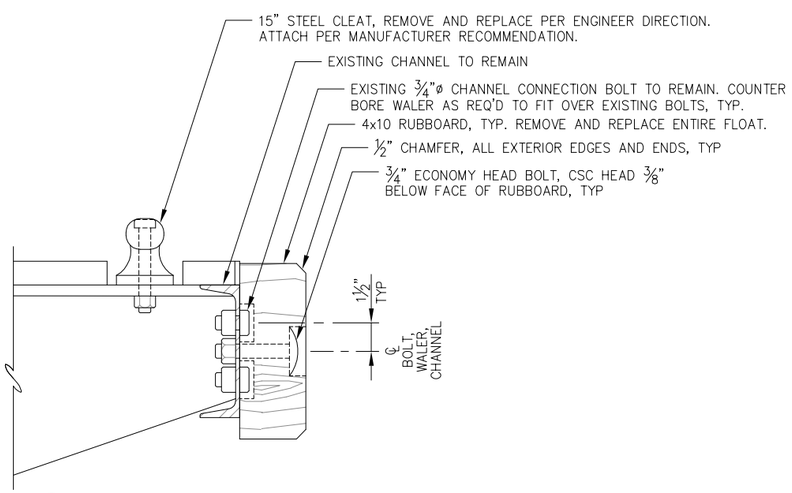

A - TYPICAL SECTION

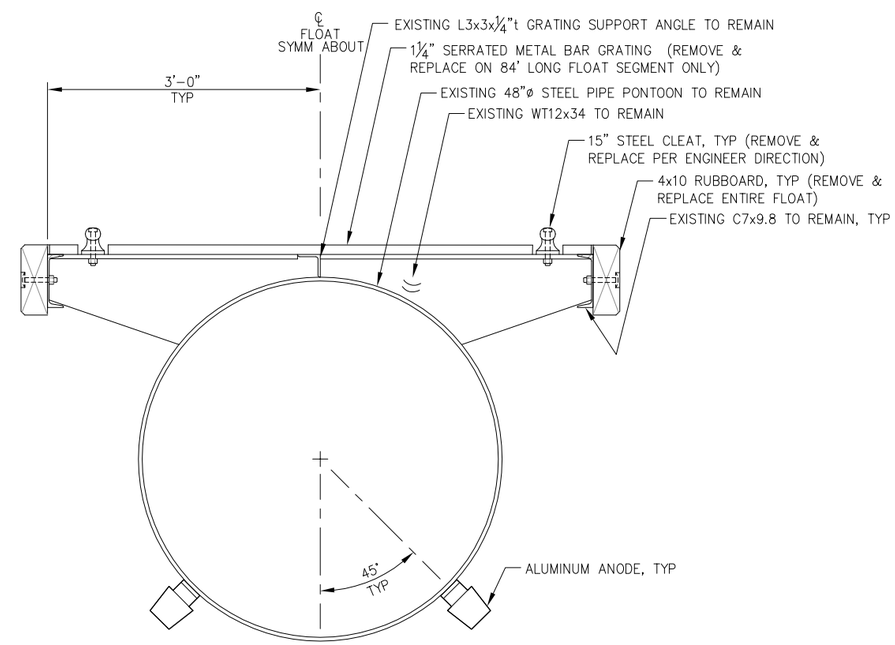

PIPE FLOAT REFURBISHMENT - TYPICAL SECTION

HAINES BOROUGH ALASKA

REVISIONS

REV.	DATE	DESCRIPTION	DWN.	CKD.	APP.

PND ENGINEERS, INC.
9360 Glacier Highway Suite 100
Juneau, Alaska 99801
Phone: 907-586-2093
Fax: 907-586-2099
www.pndengineers.com

DESIGN: BMI CHECKED: MLB
DRAWN: BMI APPROVED: CRS
SCALE: NTS

STATE OF ALASKA — Charles R. Somerville — CE-8845 — REGISTERED PROFESSIONAL ENGINEER
DATE: 3/4/13

HAINES BOROUGH
LETNIKOF COVE HARBOR RENOVATION

SHEET TITLE:
PIPE FLOAT RENOVATION DETAILS

PND PROJECT NO.: 112091 DWG. FILE: 4.02.DWG

L4.02
SHEET 22 OF 24

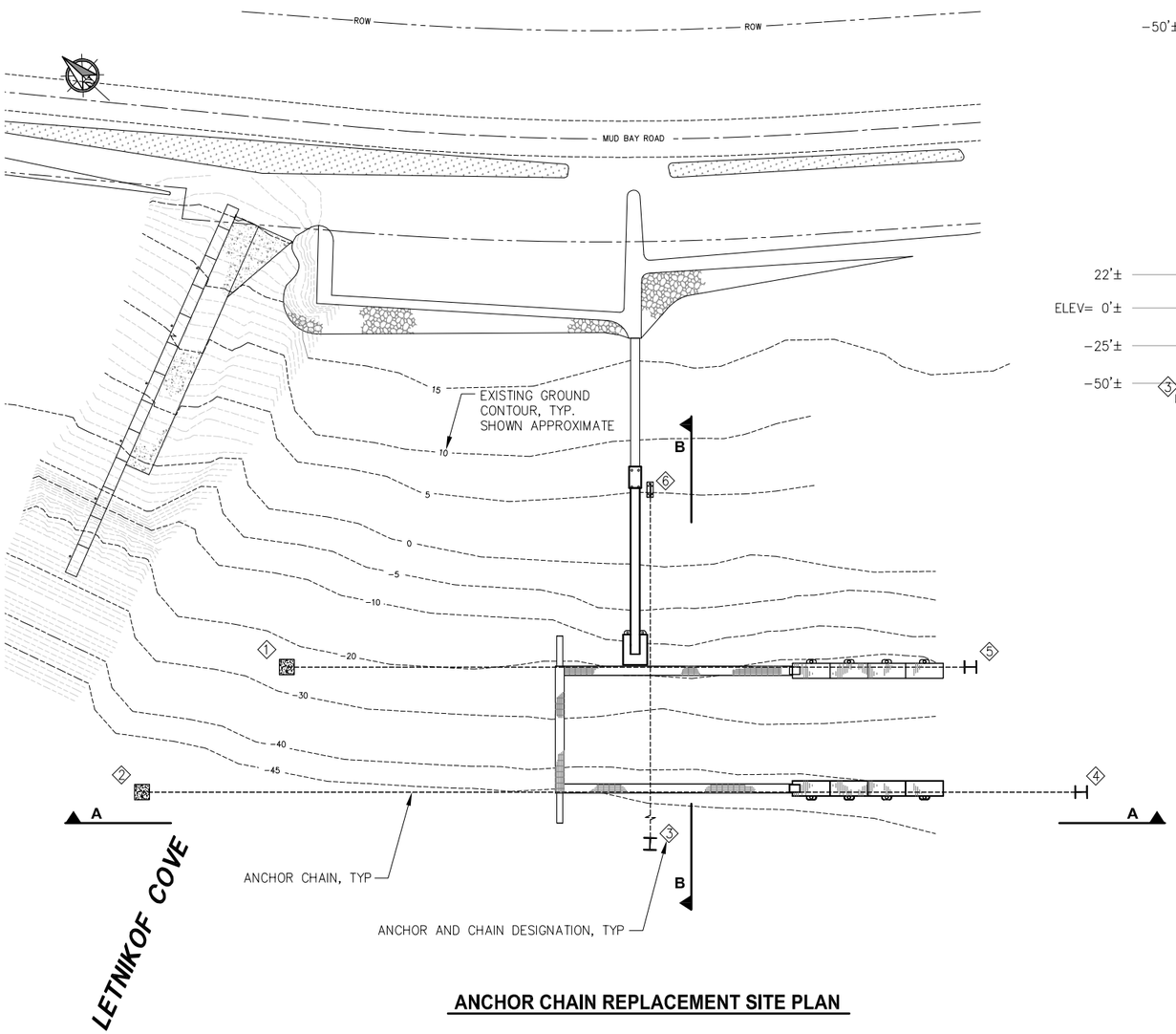

ANCHOR CHAIN REPLACEMENT SITE PLAN

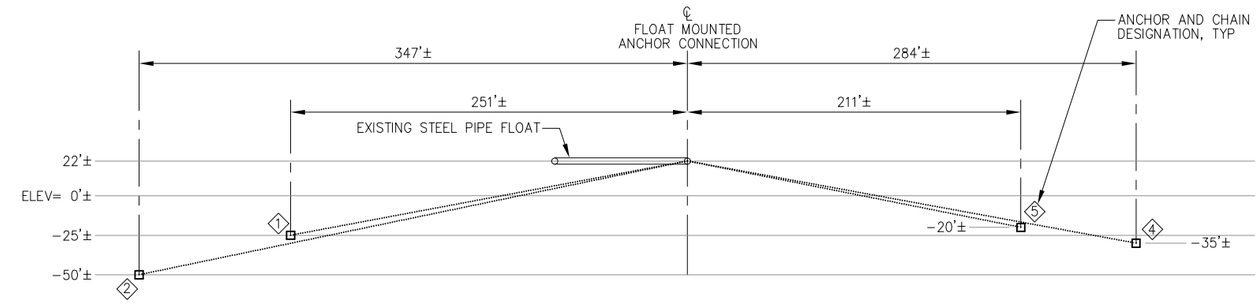

TYPICAL SECTION A-A

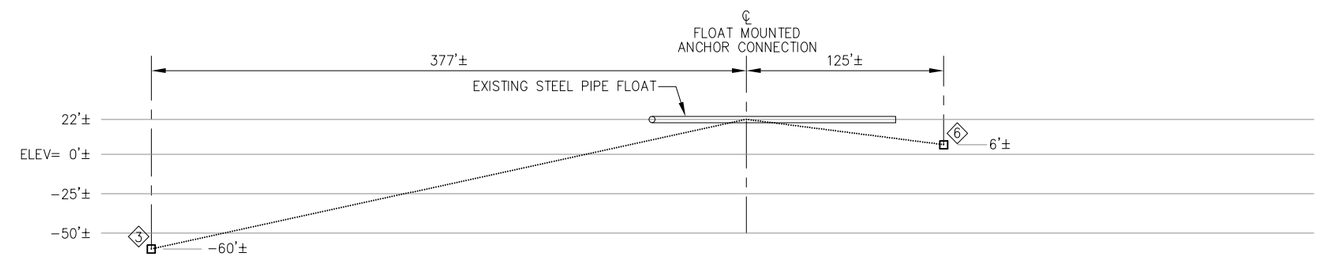

TYPICAL SECTION B-B

ANCHOR CHAIN REPLACEMENT SCHEDULE

CHAIN DESIGN.	MIN. CHAIN SIZE	MIN. STRENGTH (PROOF LBS)	EST. IN PLACE CHAIN LENGTH (ft)	SUPPLY CHAIN LENGTH (ft)	ANCHOR TYPE
1	1¼"	130,000	255	280	CONCRETE BLOCK
2	1¼"	130,000	355	390	CONCRETE BLOCK
3	1⅛"	106,000	396	440	STAKE PILE
4	1¼"	130,000	296	330	STAKE PILE
5	1¼"	130,000	221	250	STAKE PILE
6	1⅛"	106,000	125	140	ROCK ANCHOR

HAINES BOROUGH ALASKA

REVISIONS

REV.	DATE	DESCRIPTION	DWN.	CKD.	APP.

PND ENGINEERS, INC.
9360 Glacier Highway Suite 100
Juneau, Alaska 99801
Phone: 907-586-2093
Fax: 907-586-2099
www.pndengineers.com

DESIGN: BMI CHECKED: MLB
DRAWN: BMI APPROVED: CRS
SCALE: NTS

STATE OF ALASKA 2010 Charles R. Somerville CE-8845 REGISTERED PROFESSIONAL ENGINEER
DATE: 3/4/13

HAINES BOROUGH
LETNIKOF COVE HARBOR RENOVATION

SHEET TITLE: ANCHOR CHAIN REPLACEMENT PLAN

PND PROJECT NO.: 112091 DWG. FILE: 4.03.DWG

L4.03
SHEET 23 OF 24

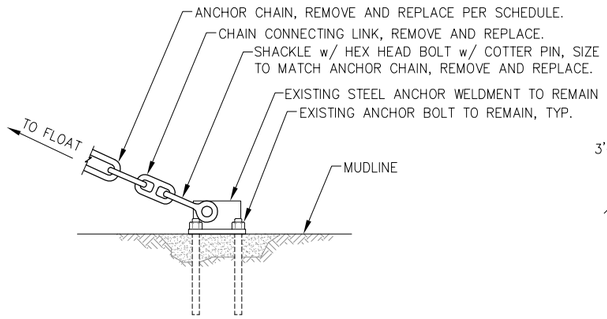

CHAIN REPLACEMENT - ROCK ANCHOR
ELEVATION

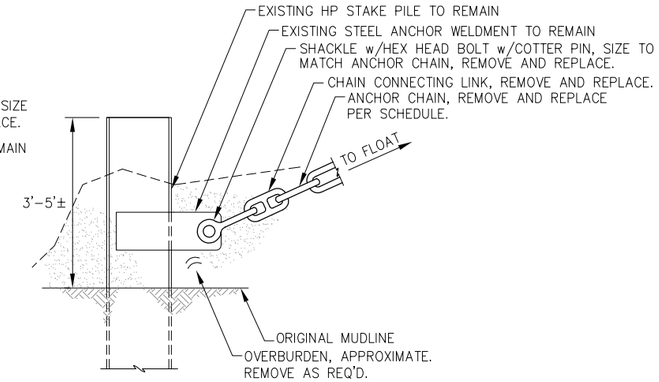

CHAIN REPLACEMENT - STAKE PILE
ELEVATION

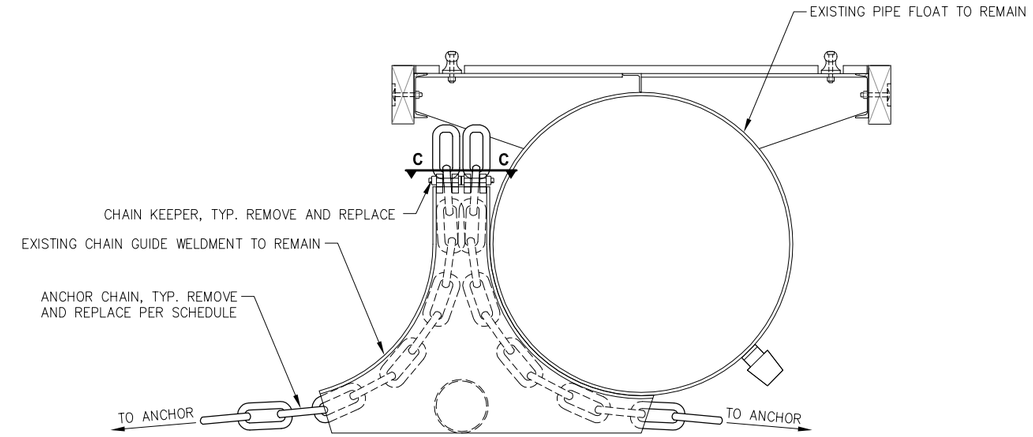

B - CHAIN REPLACEMENT - PIPE FLOAT ANCHORS 3 & 6
SECTION

NOTE: REMOVE OVERBURDEN COVERING EXISTING ANCHORS AND CHAINS AS REQ'D TO ACCESS WELDMENTS AND REPLACE CHAINS AND HARDWARE.

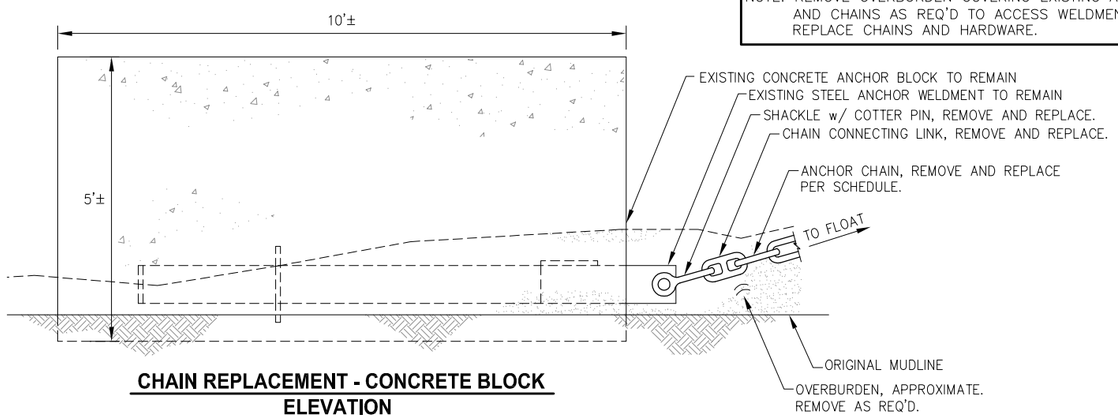

CHAIN REPLACEMENT - CONCRETE BLOCK
ELEVATION

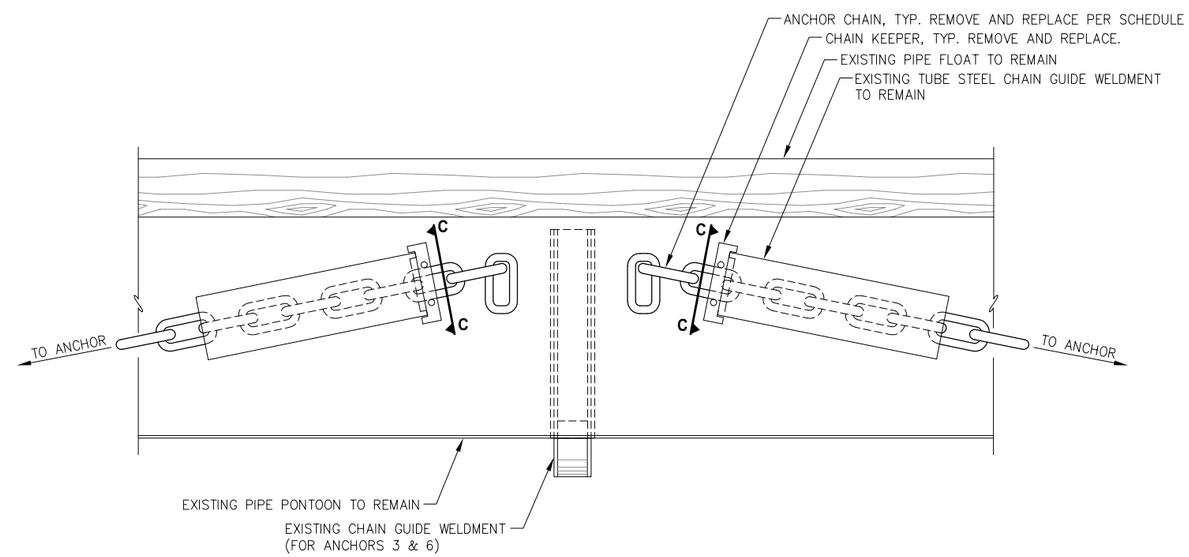

A - CHAIN REPLACEMENT - PIPE FLOAT ANCHORS 1, 2, 4, & 5
ELEVATION

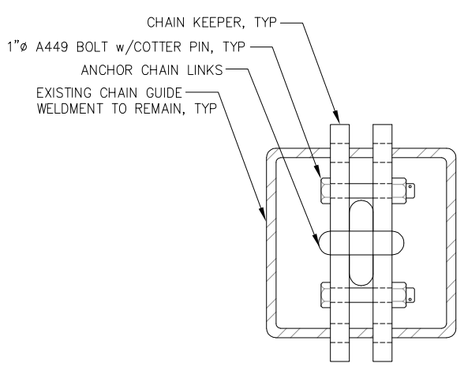

CHAIN KEEPER ASSEMBLY - C-C

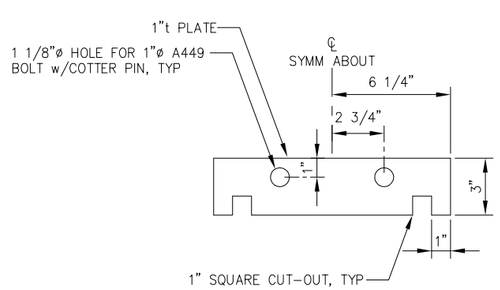

CHAIN KEEPER
(12) TOTAL

REVISIONS

REV.	DATE	DESCRIPTION	DWN.	CKD.	APP.

P N D ENGINEERS, INC.
9360 Glacier Highway Suite 100
Juneau, Alaska 99801
Phone: 907-586-2093
Fax: 907-586-2099
www.pndengineers.com

DESIGN: BMI CHECKED: MLB
DRAWN: BMI APPROVED: CRS
SCALE: NTS

STATE OF ALASKA — Charles R. Somerville — CE-8845 — REGISTERED PROFESSIONAL ENGINEER
DATE: 3/4/13

HAINES BOROUGH
LETNIKOF COVE HARBOR RENOVATION

SHEET TITLE:
ANCHOR CHAIN REPLACEMENT DETAILS

PND PROJECT NO.: 112091 DWG. FILE: 4.04.DWG

L4.04
SHEET 24 OF 24