HAINES BOROUGH, ALASKA

PORT CHILKOOT DOCK RENOVATION: PLAN SET P

LETNIKOF COVE HARBOR RENOVATION: PLAN SET L

PLANS

Volume 2 of 2

Prepared By:

PND ENGINEERS, INC.
9360 Glacier Highway, Suite 100
Juneau, Alaska 99801
(907) 586-2093

MARCH 2013

HAINES BOROUGH, ALASKA

PORT CHILKOOT DOCK RENOVATION

LOCATION MAP

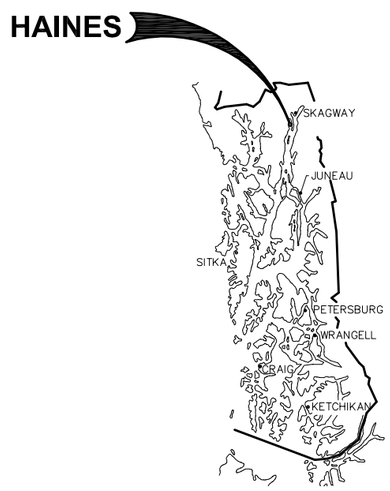

SOUTHEAST ALASKA

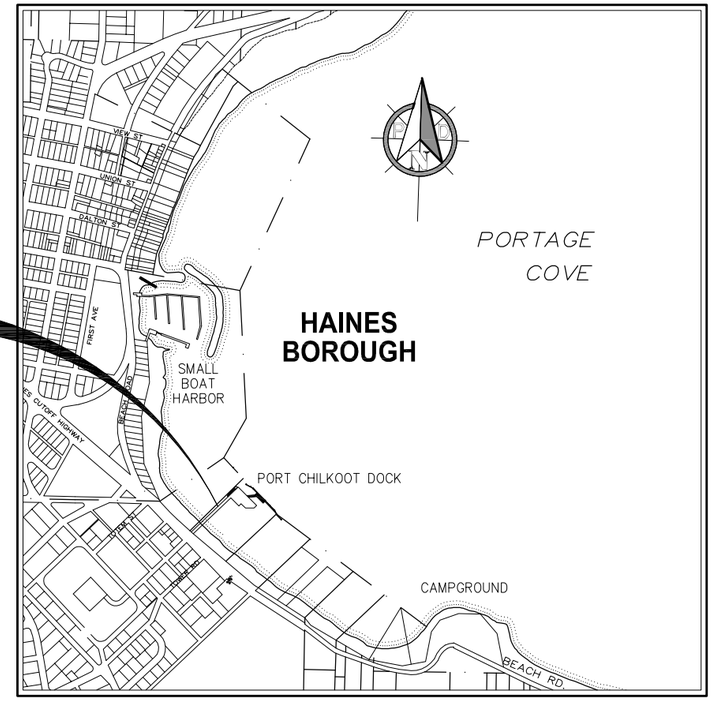

VICINITY MAP

SCALE (FEET)

0 500 1000

TIDAL INFORMATION

HIGH TIDE LINE (HTL)	21.2
MEAN HIGH WATER (MHW)	15.8
MEAN LOWER LOW WATER (MLLW)	0.0'
EXTREME LOW WATER (ELW) ESTIMATED	-5.0'

PROJECT SCHEDULE

DESCRIPTION	SCHEDULE
1. EARLIEST ALLOWED FIELD START	AUGUST 16, 2013
2. SUBSTANTIAL COMPLETION	JUNE 2, 2014
3. FINAL COMPLETION OF ALL WORK UNDER THIS CONTRACT	JULY 1, 2014

PND ENGINEERS, INC. (PND) IS NOT RESPONSIBLE FOR SAFETY PROGRAMS, METHODS OR PROCEDURES OF OPERATION, OR THE CONSTRUCTION OF THE DESIGN SHOWN ON THESE DRAWINGS. DRAWINGS ARE FOR THE USE OF THIS PROJECT ONLY AND ARE NOT INTENDED FOR REUSE WITHOUT WRITTEN APPROVAL FROM PND. DRAWINGS ARE ALSO NOT TO BE USED IN ANY MANNER THAT WOULD CONSTITUTE A DETRIMENT DIRECTLY OR INDIRECTLY TO PND.

PLAN SET P
DRAWING INDEX

SHEET NO.	DWG. NO.	TITLE
1 OF 62	P1.01	COVER SHEET, VICINITY MAP AND DRAWING INDEX
2 OF 62	P1.02	GENERAL NOTES
3 OF 62	P1.03	EXISTING CONDITIONS, SURVEY CONTROL AND TEST HOLE LOCATIONS
4 OF 62	P1.04	STANDARD BOREHOLE LOG DETAILS
5 OF 62	P1.05	STANDARD BOREHOLE LOG DETAILS
6 OF 62	P1.06	BOREHOLE LOGS
7 OF 62	P1.07	BOREHOLE LOGS
8 OF 62	P1.08	BOREHOLE LOGS
9 OF 62	P1.09	BOREHOLE LOGS
10 OF 62	P1.10	BOREHOLE LOGS
11 OF 62	P1.11	BOREHOLE LOGS
12 OF 62	P1.12	OVERALL DEMOLITION PLAN
13 OF 62	P1.13	GANGWAY AND GANGWAY LANDING DEMOLITION PLAN
14 OF 62	P1.14	ABUTMENT DEMOLITION PLAN
15 OF 62	P1.15	CRUISE SHIP APPROACH DOCK DEMOLITION PLAN
16 OF 62	P2.01	SITE PLAN
17 OF 62	P2.02	ABUTMENT PLAN AND RETAINING WALL ELEVATIONS
18 OF 62	P2.03	ABUTMENT SECTION & UPLAND DETAILS
19 OF 62	P2.04	TRESTLE FOUNDATION AND FRAMING PLANS
20 OF 62	P2.05	GANGWAY QUEUING AREA FOUNDATION AND FRAMING PLANS
21 OF 62	P2.06	CRUISE SHIP APPROACH DOCK FOUNDATION AND FRAMING PLANS
22 OF 62	P2.07	RAMP ELEVATIONS AND TRESTLE SECTION
23 OF 62	P2.08	FRAMING SECTIONS
24 OF 62	P3.01	FRAMING DETAILS
25 OF 62	P3.02	FRAMING DETAILS
26 OF 62	P3.03	FRAMING DETAILS
27 OF 62	P3.04	PILE CAP DETAILS
28 OF 62	P3.05	PILE CAP DETAILS
29 OF 62	P3.06	FRAMING DETAILS
30 OF 62	P3.07	HANDRAIL AND BULLRAIL DETAILS
31 OF 62	P3.08	ELECTRICAL PANEL AND LIGHT POLE MOUNTING DETAILS
32 OF 62	P3.09	PILE SCHEDULE AND DETAILS
33 OF 62	P4.01	GANGWAY GENERAL PLAN AND ELEVATION
34 OF 62	P4.02	GANGWAY FRAMING PLAN AND ELEVATION
35 OF 62	P4.03	GANGWAY TYPICAL SECTION AND DETAILS
36 OF 62	P4.04	GANGWAY LIFTING BRACKET DETAILS
37 OF 62	P4.05	GANGWAY SKID END DETAILS
38 OF 62	P4.06	GANGWAY HINGE END DETAILS
39 OF 62	P4.07	GANGWAY HINGE END DETAILS
40 OF 62	P4.08	GANGWAY END ELEVATIONS
41 OF 62	P4.09	PILE FRAME DETAILS
42 OF 62	P5.01	EXISTING MOORAGE FLOAT FRAMING PLAN AND SECTION
43 OF 62	P5.02	FLOAT MODIFICATION PLAN
44 OF 62	P5.03	MOORAGE FLOAT DETAILS
45 OF 62	P5.04	MOORAGE FLOAT DETAILS
46 OF 62	P5.05	MOORAGE FLOAT DETAILS
47 OF 62	P5.06	MOORAGE FLOAT DETAILS
48 OF 62	P5.07	MOORAGE FLOAT DETAILS
49 OF 62	P6.01	WATER LINE PLAN AND LAYOUT
50 OF 62	P6.02	METER BOX DETAILS
51 OF 62	P6.03	QUEUING DECK DETAILS
52 OF 62	P6.04	WATER DETAILS AT CRUISE SHIP SERVICE
53 OF 62	P6.05	WATER SERVICE DETAILS
54 OF 62	P7.01	MOORING DOLPHIN – ADDITIVE ALTERNATE B
55 OF 62	P7.02	MOORING DOLPHIN SECTIONS – ADDITIVE ALTERNATE B
56 OF 62	P8.01	STAGING AREA AND TIMBER DISPOSAL SITE MAP
57 OF 62	E1	SITE PLAN – EXISTING
58 OF 62	E2	SITE PLAN – NEW
59 OF 62	E3	DETAILS – TRESTLE
60 OF 62	E4	ELEVATIONS – EQUIPMENT PANEL
61 OF 62	E5	DETAILS
62 OF 62	E6	SINGLE LINE DIAGRAM

REVISIONS

REV.	DATE	DESCRIPTION	DWN.	CKD.	APP.

PND ENGINEERS, INC.
9360 Glacier Highway Ste 100
Juneau, Alaska 99801
Phone: 907-586-2093
Fax: 907-586-2099
www.pndengineers.com

DESIGN: SRY CHECKED: CRS
DRAWN: SRY APPROVED: CRS
SCALE: AS SHOWN

STATE OF ALASKA — Charles R. Somerville — CE-8845 — REGISTERED PROFESSIONAL ENGINEER
DATE: 3/1/13

HAINES BOROUGH
PORT CHILKOOT DOCK RENOVATION

SHEET TITLE:
COVER SHEET, VICINITY MAP AND DRAWING INDEX

PND PROJECT NO.: 112048.08 DWG. FILE: 1.01.DWG

P1.01
SHEET 1 OF 62

ABBREVIATIONS

A	
@	AT
AC	ASBESTOS CEMENT PIPE
ACP	ASPHALT CONCRETE PAVEMENT
ADJ	ADJUSTABLE
APF	ASSOCIATED PILE AND FITTING CORP.
APPROX.	APPROXIMATE
ATS	ALASKA TIDELANDS SURVEY
AV	AIR RELEASE VALVE
B	
BFV	BUTTERFLY VALVE
BLDG	BUILDING
BOP	BEGINNING OF PROJECT
BTM, BOT	BOTTOM
M	
C&G	CURB & GUTTER
CB	CATCH BASIN
CI	CAST IRON
CIP	CAST-IN-PLACE
CJ	CONTROL JOINT
℄	CENTER LINE
CLR	CLEAR
CMP	CORRUGATED METAL PIPE
CO	CLEANOUT
C.O.E.	CORPS OF ENGINEERS
CONC.	CONCRETE
CP	COMPLETE PENETRATION
CPP	CORRUGATED POLYETHYLENE PIPE
COR	CORNER
CSC	COUNTERSINK
CTR	CENTER
CY	CUBIC YARD
D	
DCP	DISSIMILAR PIPE COUPLING
D/DIA	DIAMETER
DBL	DOUBLE
DL	DEAD LOAD
DIP	DUCTILE IRON PIPE
DIM	DIMENSION
DN	DOWN
DTL	DETAIL
E	
E	EAST
EA.	EACH
EJ	EXPANSION JOINT
EL/ELEV	ELEVATION
EOP	END OF PROJECT
EQ	EQUAL
EQUIP	EQUIPMENT
EST	ESTIMATE
EXC	EXCAVATE
EXIST	EXISTING
F	
FC	FACE OF CURB
FD	FLOOR DRAIN
FF	FINISHED FLOOR
FH	FIRE HYDRANT, FLAT HEAD
FIN	FINISH (ED)
FM	FORCE MAIN SEWER
FND	FOUNDATION
FT	FOOT
FTG	FOOTING
FL	FLOWLINE
G	
GAL	GALLON
GALV	GALVANIZED
GB	GRADE BREAK
GPM	GALLONS PER MINUTE
GRD	GROUND
GV	GATE VALVE
H	
H&T	HUB & TACK
HD	HEAVY DUTY
HDG	HOT-DIPPED GALVANIZED
HDPE	HIGH DENSITY POLYETHYLENE
HORIZ	HORIZONTAL
HSE	HOUSE
HT	HEIGHT
HWY.	HIGHWAY
I	
ID	INSIDE DIAMETER
IE	INVERT ELEVATION
IN	INCH
IP	IRON PIPE
INCL	INCLUDE (D) (ING)
INSUL	INSULATE (D) (ION)
INV	INVERT
J	
JB	JUNCTION BOX
L	
LBS	POUNDS
LF	LINEAR FEET
LL	LIVE LOAD
LOC	LOCATION
LS	LUMP SUM
M	
MAX	MAXIMUM
MECH	MECHANICAL
MFR	MANUFACTURE (R)
MH	MANHOLE
MJ	MECHANICAL JOINT
MI	MALLEABLE IRON
MIN	MINIMUM
MLLW	MEAN LOWER LOW WATER
MSF	1000 SQUARE FEET
MSE	MECHANICALLY STABILIZED EARTH
MTL	MATERIAL (S)
N	
N	NORTH
NFS	NON FROST SUSCEPTIBLE
NIC	NOT IN CONTRACT
NO	NUMBER
NTS	NOT TO SCALE
O	
OBD	OVERBURDEN
OC	ON CENTER
OD	OUTSIDE DIAMETER
OG	ORIGINAL GOUND
OHE	OVERHEAD ELECTRICAL
OWS	OIL-WATER SEPARATOR
OPP	OPPSITE
P	
P	PIPE
PC	POINT OF CURVATURE, PIECE
PCC	PRECAST CONCRATE
PED	PEDESTAL
PER	PERIMETER
PERF	PERFORATE (D)
PI	POINT OF INTERSECTION
PLWD	PLYWOOD
PL	PROPERTY LINE, PLATE
PROJ	PROJECT
PRV	PRESSURE REDUCING VALVE
PSI	POUND PER SQUARE INCH
PT	POINT, PRESSURE TREATED, POINT OF TANGENCY
PVC	POINT OF VERTICAL CURVATURE, POLY VINYL CHLORIDE
Q	
QTY	QUANTITY
R	
RAD	RADIUS
RE	RIM ELEVATION
REF	REFERENCE
REINF	REINFORCEMENT
REQD	REQUIRED
RET	RETAINING
RO	ROUGH OPENING
ROW	RIGHT OF WAY
S	
S	SOUTH
SCHED	SCHEDULE
SD	STORM DRAIN
SDI	STORM DRAIN INLET STRUCTURE
SDO	STORM DRAIN OUTLET STRUCTURE
SDR	STANDARD DIMENSION RATIO
SF	SQUARE FOOT
SHLDR	SHOULDER
SI	STREET INTERSECTION
SPEC	SPECIFICATION (S)
SQ	SQUARE
SSC	SANITARY SEWER CONNECTION
SS	STAINLESS STEEL, SANITARY SEWER
SDMH	STORM DRAIN MANHOLE
SSMH	SANITARY SEWER MANHOLE
STA	STATION
STD	STANDARD
STL	STEEL
STRG	STRONG
SW	SIDEWALK
SWR	SEWER
SY	SQUARE YARD
SYM	SYMMETRICAL
T	
t	THICK
T&B	TOP AND BOTTOM
T&G	TONGUE AND GROOVE
TBC	TOP BACK OF CURB
TBD	TO BE DETERMINED
TBM	TEMPORARY BENCH MARK
TD	TRENCH DRAIN
TEL	TELEPHONE
TEMP	TEMPERATURE, TEMPORARY
TH	TEST HOLE
THK	THICK
TRANS	TRANSVERSE
TV	TELEVISION
TYP	TYPICAL
U	
UBC	UNIFORM BUILDING CODE
UE	UNDERGROUND ELECTRIC
UMC	UNIFORM MECHANICAL CODE
UHMW	ULTRA HIGH MOLECULAR WEIGHT
UON	UNLESS OTHERWISE NOTED
UPC	UNIFORM PLUMBING CODE
V	
VB	VALVE BOX
VERT	VERTICAL
W	
W	WEST
W/	WITH
WD	WOOD
WELDMT	WELDMENT
WL	WATERLINE
WV	WATER VALVE
W/O	WITHOUT
X	
XFMR	TRANSFORMER
<PT	ANGLE POINT

GENERAL NOTES - CIVIL

1. CONTRACTOR SHALL INSTALL TEMPORARY DEVICES CONSISTING OF BUT NOT LIMITED TO STRAW BALES, FILTER FABRIC FENCES, SETTLING POND, ETC., TO PROHIBIT SILT LADEN DEWATERING EFFLUENT AND OTHER CONSTRUCTION RUNOFF FROM ENTERING ADJACENT STREAMS OR WATER BODIES. CONTRACTOR IS RESPONSIBLE FOR THE QUALITY OF THE DEWATERING EFFLUENT AND OTHER CONSTRUCTION RUNOFF THAT ENTERS ADJACENT STREAMS OR WATER BODIES AND IS, THEREFORE, RESPONSIBLE FOR VIOLATIONS AND PENALTIES FROM HIS OPERATIONS.
2. PROPERTY DISTURBED DURING CONSTRUCTION SHALL BE RESTORED TO ITS PRE-CONSTRUCTION CONDITION OR BETTER AT NO ADDITIONAL COST.
3. EXISTING UTILITIES & DRAIN PIPE LOCATIONS ARE DERIVED FROM FIELD LOCATES. ACTUAL LOCATIONS MAY VARY FROM THOSE SHOWN. CALL FOR ALL UTILITY LOCATES BEFORE YOU DIG.

WATER AND WASTE MATERIAL	(907) 766-2237 OR 766-2200
POWER AND LIGHT (AP&T)	(907) 766-2331
CATV	(907) 766-2137
TELEPHONE (GTE)	(907) 766-2311

4. GRADING AND ALIGNMENT OF STRUCTURES & FINAL SURFACING ARE SUBJECT TO MINOR REVISIONS BY THE ENGINEER TO FIT SITE CONDITIONS. GRADE ALL IMPROVEMENTS WITH POSITIVE DRAINAGE AWAY FROM STRUCTURES.
5. PROPERTY AND MEANDER LINES ON THESE DRAWINGS ARE SHOWN APPROXIMATE.
6. THE CONTRACTOR SHALL NOTIFY THE HAINES BOROUGH WATER AND SEWER DEPARTMENT AT 766-2200 OF PROPOSED WATER OR SEWER SERVICE INTERRUPTION AT LEAST 48 HOURS PRIOR TO SHUTDOWN.

GENERAL NOTES - STRUCTURAL

DESIGN PARAMETERS

THE FOLLOWING DESIGN CODES AND STANDARDS ARE APPLICABLE AND CONSIDERED PART OF THIS SPECIFICATION: AISC CODE OF STANDARD PRACTICE FOR STEEL BUILDINGS AND BRIDGES, AWS STRUCTURAL WELDING CODE D1.1, ACI 318 AND 301, ALUMINUM DESIGN MANUAL 2005, AND ASHTO STANDARD SPACIFICATION FOR HIGHWAY BRIDGES.

DOCK LIVE LOAD:	ASSHTO HS20-44 TRUCK 100 PSF UNIFORM LOAD 10 TON FORKLIFT (35,500 AXLE LOAD)
GANGWAY LIVE LOAD:	60 PSF UNIFORM LOAD

REVISIONS

REV.	DATE	DESCRIPTION	DWN.	CKD.	APP.

P N D ENGINEERS, INC.
9360 Glacier Highway Ste 100
Juneau, Alaska 99801
Phone: 907-586-2093
Fax: 907-586-2099
www.pndengineers.com

DESIGN: SRY CHECKED: CRS
DRAWN: SRY APPROVED: CRS
SCALE: NTS
DATE: 3/1/13

STATE OF ALASKA — 24 OCT 2012 — Charles R. Somerville — CE-8845 — REGISTERED PROFESSIONAL ENGINEER

HAINES BOROUGH
PORT CHILKOOT DOCK RENOVATION

SHEET TITLE: GENERAL NOTES

PND PROJECT NO.: 112048.08 DWG. FILE: 1.02.DWG

P1.02
SHEET 2 OF 62

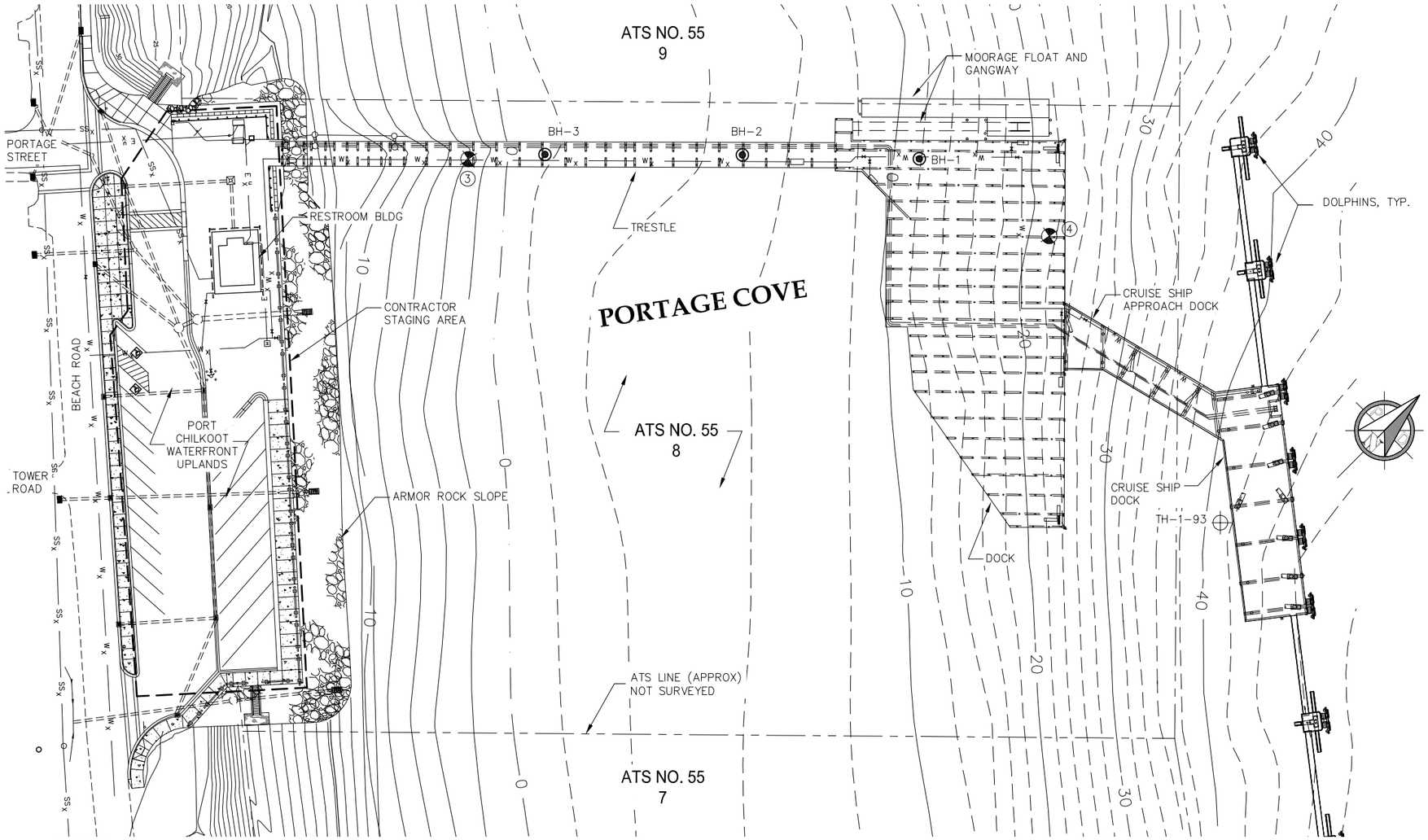

1 EXISTING CONDITIONS

SCALE IN FEET
0 40 80 FT.

LEGEND

- PROPERTY LINE (NOT SURVEYED)
- SURVEY CONTROL POINT
- SANITARY SEWER
- WATER
- CABLE UTILITY LINE (UNDERGROUND)
- ELECTRIC UTILITY LINE (UNDERGROUND)
- TELEPHONE UTILITY LINE (UNDERGROUND)
- STORM SEWER PIPE
- SANITARY SEWER MANHOLE
- WATER VALVE
- FIRE HYDRANT
- LIGHT POLE
- STORM DRAIN INLET
- BH-1 / TH-1-93 — TEST HOLE LOCATION

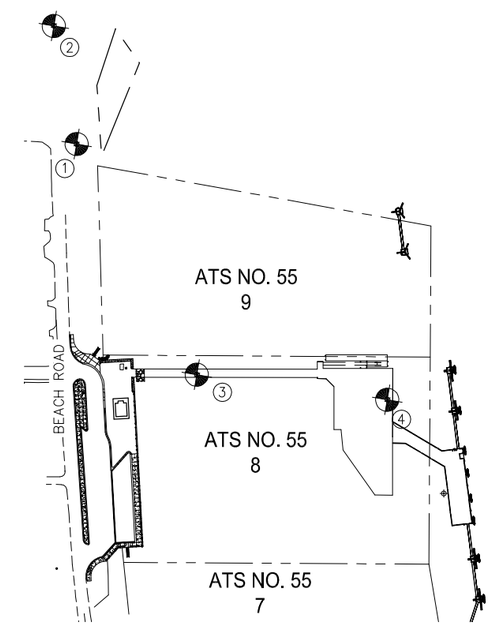

2 SURVEY CONTROL MAP

SCALE IN FEET
0 150 300 FT.

NOTES

1. TOPOGRAPHIC SURVEY WAS CONDUCTED IN JULY 2011.
2. HORIZONTAL CONTROL IS ON A LOCAL GRID SYSTEM.
3. VERTICAL DATUM FOR THIS SURVEY IS MLLW = 0.0'. THE BASIS OF VERTICAL CONTROL WAS ESTABLISHED HOLDING BENCHMARK "HH-1" AS 25.93 FEET. BENCHMARK "HH-1" IS A U.S.A.C.E. BRASS CAP LOCATED NEAR A WEATHER STATION ON THE NORTH SIDE SPIT OF HAINES HARBOR.
4. SEE U.S.A.C.E CONDITION SURVEY DRAWING TITLED "HAINES HARBOR CONDITION SURVEY, MAY 16, 2000."
5. UPLANDS INFORMATION IS SHOWN FROM DESIGN DOCUMENTS AND DOES NOT REPRESENT SURVEYED INFORMATION.
6. ALL SOIL SAMPLES VISUALLY CLASSIFIED IN ACCORDANCE WITH THE UNIFIED SOIL CLASSIFICATION SYSTEM, ASTM D 2488, STANDARD PRACTICE FOR DESCRIPTION AND IDENTIFICATION OF SOILS (VISUAL-MANUAL PROCEDURE).

SURVEY CONTROL

POINT	NORTHING	EASTING	ELEV.	DESCRIPTION
1	16922.66	10678.81	38.77	USS 2716 MON IN SIDEWALK
2	17054.68	10479.89	50.48	ADOT&PF BRASS CAP IN ROAD
3	16773.23	11172.11	34.52	MAGNAIL IN TRESTLE DECK
4	17007.76	11470.76	34.11	MAGNAIL IN DOCK DECK

HAINES BOROUGH ALASKA

REVISIONS

REV.	DATE	DESCRIPTION	DWN.	CKD.	APP.

PND ENGINEERS, INC.
9360 Glacier Highway Ste 100
Juneau, Alaska 99801
Phone: 907-586-2093
Fax: 907-586-2099
www.pndengineers.com

DESIGN: SRY CHECKED: CRS
DRAWN: SRY APPROVED: CRS
SCALE: AS SHOWN

STATE OF ALASKA — Charles R. Somerville — CE-8845 — REGISTERED PROFESSIONAL ENGINEER
DATE: 3/1/13

HAINES BOROUGH
PORT CHILKOOT DOCK RENOVATION

SHEET TITLE:
EXISTING CONDITIONS, SURVEY CONTROL AND TEST HOLE LOCATIONS

PND PROJECT NO.: 112048.08 DWG. FILE: 1.03.DWG

P1.03
SHEET 3 OF 62

SOILS CLASSIFICATION, CONSISTENCY AND SYMBOLS

CLASSIFICATION

Identification and classification of the soil is accomplished in general accordance with the ASTM version of the Unified Soil Classification System (USCS) as presented in ASTM Standard D2487. The standard is a qualitative method of classifying soil into the following major divisions (1) coarse grained, (2) fine grained, and (3) highly organic soils. Classification is performed on the soils passing the 75 mm (3 inch) sieve and if possible the amount of oversize material (> 75 mm particles) is noted on the soil logs. This is not always possible for drilled test holes because the oversize particles are typically too large to be captured in the sampling equipment. Oversize materials greater than 300 mm (12 inches) are termed boulders, while materials between 75 mm and 300 mm are termed cobbles. Coarse grained soils are those having 50% or more of the non-oversize soil retained on the No. 200 sieve (0.075 mm); if a greater percentage of the coarse grains is retained on the No. 4 (4.76 mm) sieve the coarse grained soil is classified as gravel, otherwise it is classified as sand. Fine grained soils are those having more than 50% of the non-oversize material passing the No. 200 sieve; these may be classified as silt or clay depending their Atterberg liquid and plastic limits or observations of field consistency. Refer to the most recent version of ASTM D2487 for a complete discussion of the classification method.

SOIL CONSISTENCY - CRITERIA

Soil consistency as defined below and determined by normal field and laboratory methods applies only to non-frozen material. For these materials, the influence of such factors as soil structure, i.e. Fissure systems, shinkage cracks, slickensides, etc., must be taken into consideration in making any correlation with the consistency values listed below. In permafrost zones, the consistency and strength of frozen soils may vary significantly and unexplainably with ice content, thermal regime and soil type.

Standard Penetration Test (Blows/ft) Relative to Denstiy/Consistency

N60 Density		Relative Density	N60 Consistency	
0-4	Very Loose	0-15%	< 2	Very Soft
4-10	Loose	15-35%	2 - 4	Soft
10-30	Medium	35-65%	4 - 8	Medium
30-50	Dense	65-85%	8 - 15	Stiff
> 50	Very Dense	>85%	15 - 30	Very Stiff
			> 30	Hard

Undrained Shear Strength

psf
< 250
250 - 500
500 - 1000
1000 - 2000
2000 - 4000
> 4000

Ref: Terzaghi and Peck, Soil Mechanics in Engineering Practice, 3rd Edition, pg 60-63
ASTM D1586 Standard Test Method for Penetration Test and Split-Barrel Sampling of Soils
ASTM D2487 Standard Practice for Classification of Soils for Engineering Purposes (USCS)

SAMPLER TYPE SYMBOLS

A	Auger Sample	Pb	Pitcher Barrel	St	1.4" Split Spoon w/ 47# Hammer
Bs	Bulk (grab) Sample	Sl	2.5" Split Spoon w/ 140# Hammer	Sx	2.0" Split Spoon w/ 47# Hammer
Cs	Core Barrel w/ Single Tube	Sm	2.5" Split Spoon w/ 300# Hammer	Sz	1.4 Split Spoon w/ 340# Hammer
Cd	Core Barrel w/ Double Tube	Sh	2.5" Split Spoon w/ 340# Hammer	Ts	Shelby Tube
Ct	Core Barrel w/ Triple Tube	Sp	2.5" Split Spoon, Pushed	Tm	Modified 2.5 O.D. Shelby Tube
Hl	2.5" Split Spoon w/ Air Hammer	Ss	1.4" Split Spoon w/ 140# Hammer		
Hs	1.4" Split Spoon w/ Air Hammer				

Note: Split Spoon size refers to sampler inside diameter.

P N D ENGINEERS, INC.

Designed: PND
Drawn: PJD
Checked: CRS
Project No.: 112048.01
Date: AUG. 2011

STANDARD BOREHOLE LOG DETAILS

BOREHOLE LOGS FIGURE B-1

Depth (Feet)	Water Table	GRAPHIC SYMBOL	SOIL DESCRIPTION: Soil Name, Color, Moisture Content, Relative Density, Soil Structure, Mineralogy, Other Information	SAMPLES: Number	Type	Location	Recovery (%)	Penetration Blows per 6/Inch (per Foot)*	GRAPH: BLOW COUNT (BPF)* 20 40 60 80; POCKET PEN. (TSF) 1 2 3 4; VANE SHEAR (TSF) 2 4 6 8	COMMENTS: Casing Depth, Drilling Rate, Fluid Loss, Drill Pressure, Tests, Instrumentation Additional Information	Elevation (Feet)
0			0' - 0.30' A.C. PAVEMENT							Begin drilling 10/24/03 8:00 a.m.	24.43
	▽		POORLY-GRADED GRAVEL W/ SILT AND SAND Gray, Dry, Subangular, Medium Dense, GP-GM	1	Ss		30	6-6-5-4 (9)		2' to 3' - Hard, loud drilling 1-ft min. boulder encountered	
2											22.43
1	2	3	4	5	6	7	8	9	10	11	12

COLUMN DESCRIPTIONS

1	Depth	Depth (in feet) below the ground surface.
2	Water Level	Groundwater level recorded while drilling. Depths and times are recorded in comments column.
3	Graphic Log	Graphic depiction of materials encountered.
4	Soil Description	Description of materials encountered, including USCS soil descriptions.
5	Sample Number	Sample identification number.
6	Sample Type	Type of soil sample collected at depth interval depicted; symbols explained on Fig. B-01.
7	Sample Location	Location soil sample taken.
8	Sample Recovery	Percentage of sample recovered.
9	Sample Blows	Number of blows to advance driven sampler each 6-inch interval using sampler type specified with a 30-inch drop. Blows per foot given in parentheses.
10	Graphs	Graphic log depicting blow counts per foot with a specified split spoon, Pocket Penetration and Vane Shear tests depicted where taken on fine grained soils.
11	Comments	Comments or observations on drilling/sampling by driller or PND field personnel.
12	Elevation	Elevation (in feet) with respect to Mean Lower Low Water (MLLW) or other datum where specified.

GENERAL NOTES

1. Field descriptions may have been modified to reflect laboratory test results.
2. Descriptions on these boring logs apply only at the specific locations at the time the borings were drilled. They are not warranted to be representative of subsurface conditions at other locations or times.
3. Split spoon blow counts shown are uncorrected raw data. Various hammer sizes and split spoon sizes were used and have not been corrected to a Standard Penetration Test (SPT). Blow counts may vary substantially between SPT and these methods.

P N D ENGINEERS, INC.

Designed: PND
Drawn: PJD
Checked: CRS
Project No.: 112048.01
Date: AUG. 2011

STANDARD BOREHOLE LOG DETAILS

BOREHOLE LOGS FIGURE B-2

HAINES BOROUGH ALASKA

REVISIONS

REV.	DATE	DESCRIPTION	DWN.	CKD.	APP.

P N D ENGINEERS, INC.
9360 Glacier Highway Ste 100
Juneau, Alaska 99801
Phone: 907-586-2093
Fax: 907-586-2099
www.pndengineers.com

DESIGN: SRY CHECKED: CRS
DRAWN: PJD APPROVED: CRS
SCALE:

STATE OF ALASKA 24910 Charles R. Somerville CE-8845 REGISTERED PROFESSIONAL ENGINEER
DATE: 3/1/13

HAINES BOROUGH
PORT CHILKOOT DOCK RENOVATION

SHEET TITLE: STANDARD BOREHOLE LOG DETAILS

PND PROJECT NO.: 112048.08 DWG. FILE: 1.04.DWG

P1.04
SHEET 4 OF 62

SOIL LEGEND

- FILL
- PEAT
- WELL GRADED GRAVEL (GW)
- POORLY GRADED GRAVEL (GP)
- POORLY GRADED GRAVEL WITH SAND (GP)
- SILTY GRAVEL (GM)
- SILTY GRAVEL WITH SAND (GM)
- POORLY GRADED SAND (SP)
- POORLY GRADED SAND WITH GRAVEL (SP)
- POORLY GRADED SAND WITH SILT (SP)
- SILTY SAND (SM)
- SILTY SAND WITH GRAVEL (SM)
- LEAN CLAY (CL)
- LEAN CLAY WITH SAND (CL)
- GRAVELLY LEAN CLAY (CL)
- CLAYEY SILT (ML/CL)
- CLAYEY SILT WITH GRAVEL (ML/CL)
- CLAYEY SILT WITH SAND (ML/CL)
- SANDY CLAYEY SILT WITH GRAVEL (ML/CL)
- SILT (ML)
- SILT WITH SAND (ML)
- SILT WITH GRAVEL (ML)
- SANDY SILT (ML)
- GRAVELLY SILT (ML)
- GRAVELLY SILT WITH SAND (ML)

LIST OF ABBREVIATIONS

Assoc	associated	TV	Tor Vane shear tester
BPF	blows per foot	vfn	very fine
dia	diameter	Vn/Vns	vein/veins
E.O.H.	end of borehole	wt	weight
fn	fine	w/	with
frag	fragments	x-cut	cross cut
ft	foot	xlls	crystals
Geonor	Vane shear tester	@	at
grn	grain	<	less than
PP	Pocket Penetrometer	>	greater than

P N D
ENGINEERS, INC.

Designed: PND
Drawn: PJD
Checked: MH
Project No.: 112048.01
Date: August 2011

STANDARD BOREHOLE LOG DETAILS

BOREHOLE LOGS | FIGURE B-3

METRIC CONVERSIONS

Length	1 inch	= 25.4 mm	1 mm	= 0.0394 inch
	1 foot	= 0.3048 m	1 m	= 3.281 feet
	1 mile	= 1.6093 km	1 km	= 0.621 mile
Area	1 sq. inch	= 6.452 cm²	1 cm²	= 0.155 sq. inch
	1 sq. foot	= 0.0929 m²	1 m²	= 10.764 sq. foot
	1 acre	= 0.4047 hectare	1 hectare	= 2.47 acre
	1 sq. mile	= 2.59 km²	1 km²	= 0.386 sq. mile
Volume	1 cu. inch	= 16.387 cm³	1 cm³	= 0.061 cu. inch
	1 cu. foot	(cc)	1 m³	= 35.31 cu. foot
	1 cu. yard	= 0.0283 m³	1 m³	= 1.308 cu. yard
	1 U.S. gallon	= 0.7646 m³	1 liter	= 0.264 U.S. gallon
		= 3.785 liters		
Mass	1 lb.	= 0.4536 kg	1 kg	= 2.205 lb.
Force	1 lb.	= 4.448 N	1 N	= 0.225 lb.
	1 ton	=8.896 kN	1 kN	= 0.1124 U.S. ton
Density	1 lb./cu. ft.	= 16.019 kg/m³	1 kg/m³	= 0.0624 lb./cu. foot
		= 0.1571 kN/m³	1 kN/m³	= 6.365 lb./ cu. foot
Pressure/Stress	1 lb./sq. in.	= 0.0703 kg/cm²	1 kg/cm²	= 14.22 lb./sq. inch
			1 kPa	= 0.145 lb./sq. inch
	1 lb./sq. ft.	(= 6.895 kPa)	1 kg/cm²	= 0.2048 lb./sq. ft.
		= 4.882 kg/cm²	1 kPa	= 20.886 lb./sq. foot
	1 U.S. ton/sq. ft.	(= 0.04788 kPa)	1 kPa	= 0.01044 U.S. ton/sq. foot
	[Note: 1 kPa	= 95.76 kPa		
		= 1 kN/m²		
Flow Velocity	1 gal./min.	= 6.309 x 10^{5} m³/sec	1 m³/sec	= 15,850 gallons per minute
	1 ft./sec.	= 0.3048 m/sec	1 m/sec	= 3.28 ft./sec
Coefficient of Compressibility M_v :	1 sq. ft./U.S. ton	= 0.0104 m²/kN		
	1 sq. in./lb	= 14.22 cm²/kg		
Coefficient of consolidation C_v :	1 sq. ft./year	= 0.0929 m²/year	1 m²/year	= 10.76 sq. ft. /year
		(= 0.002946 mm²/sec)	1 mm²/sec	= 339.4 sq. ft./year
Moment	1 lb.-ft.	= 0.1383 kq-m	1 kq-m	= 7.23 lb.-foot
		(= 1.3558 Nm)	1 N-m	= 0.7376 lb.-foot
Speed	1 mile/hour	= 1.609 km/hour	1 km/hour	= 0.622 mile/hour
		(=0.447 m/sec)	1 m/sec	= 2.237 mph
	1 foot/sec	= 0.3048 m/sec	1 m/sec	= 3.281 feet/sec

P N D
ENGINEERS, INC.

Designed: PND
Drawn: PJD
Checked: CRS
Project No.: 112048.01
Date: AUG. 2011

STANDARD BOREHOLE LOG DETAILS

BOREHOLE LOGS | FIGURE B-4

HAINES BOROUGH ALASKA

REVISIONS

REV.	DATE	DESCRIPTION	DWN.	CKD.	APP.

P N D
ENGINEERS, INC.

9360 Glacier Highway Ste 100
Juneau, Alaska 99801
Phone: 907-586-2093
Fax: 907-586-2099
www.pndengineers.com

DESIGN: SRY CHECKED: CRS
DRAWN: PJD APPROVED: CRS
SCALE:

STATE OF ALASKA
Charles R. Somerville
CE-8845
REGISTERED PROFESSIONAL ENGINEER
DATE: 3/1/13

HAINES BOROUGH
PORT CHILKOOT DOCK RENOVATION

SHEET TITLE:
STANDARD BOREHOLE LOG DETAILS

PND PROJECT NO.: 112048.08 DWG. FILE: 1.04.DWG

P1.05
SHEET 5 OF 62

Depth (feet)	Water Table	Graphic Symbol	Soil Name, Color, Moisture Content, Relative Density, Soil Structure, Mineralogy, Other Information	Number	Type	Location	Recovery % (RQD %)	Penetration Blows per 6/Inch (per foot) or {Rock Quality}	Casing Depth, Drilling Rate, Fluid Loss, Drill Pressure, Tests, Instrumentation, Additional Information	Elevation (feet)
0.0				1	Sh		28	3-2-8-(10)	Begin Drilling: 8/25/11; Time:12:30 PM 4 inch casing sunk first 1 ft. into mudline under own weight, with 6 blows casing sunk an additional 3 ft.; added a 5 ft casing segment, with an average of 36 BPF, advanced casing to 9 ft below mudline	-6.2
2.5										-8.7
5.0									only fine sands observed in the cuttings	-11.2
7.5									smooth advance of the drill steel while washing hole	-13.7
10.0			POORLY GRADED SAND (SP) dark gray to black, wet, loose to medium dense; 100% medium sand; earthy odor, @ 14.5 ft sand color changes to a greenish-gray	2	Sh		0	10-16-20-(36)	"no recovery" ; catcher in sampler sheared off	-16.2
12.5										-18.7
15.0				3	Sh		84	8-11-16-(27)		-21.2
17.5			@ 19.5 ft - 19.7 ft: greenish gray, wet, loose; %G = 5, fine to medium grained and sub-rounded; % S = 95, fine to coarse grained						increasing white broken shell fragments in cuttings	-23.7
20.0			SAND (SW)	4A	Sh		100	2-1-2-1-(3)		-26.2

GRAPH: BLOW COUNT 20 40 60 80; POCKET PEN (tsf) 1 2 3 4; VANE SHEAR (tsf) 0.2 0.4 0.6 0.8

P N D ENGINEERS, INC.

Logged By: PJD/SCS
Data Entry: PJD
Checked: CRS
Project No.: 112048.01
Date: Aug 2011

PORT CHILKOOT DOCK IMPROVEMENTS
Portage Cove
Haines, Alaska

BOREHOLE 1

FIGURE B-5
1 of 4

Depth (feet)	Water Table	Graphic Symbol	Soil Name, Color, Moisture Content, Relative Density, Soil Structure, Mineralogy, Other Information	Number	Type	Location	Recovery % (RQD %)	Penetration Blows per 6/Inch (per foot) or {Rock Quality}	Casing Depth, Drilling Rate, Fluid Loss, Drill Pressure, Tests, Instrumentation, Additional Information	Elevation (feet)
20.0				4B	Sh		38		PP = 2.50tsf Geonor =0.32tsf	-26.2
22.5									milky green/gray fines in the cuttings	-28.7
25.0				5	Ss		39	2-2-3-(5)	@ sample 5 switched to Ss sampler Geonor =0.22tsf	-31.2
27.5										-33.7
30.0			CLAYEY SILT (ML/CL) greenish gray mottled with dark gray, wet, low plasticity; slow dilatancy Consistency of the cohesive sediment is very soft to soft	6	Ss		78	0-0-0-(0)	sampler sunk under own weight PP = 0.00tsf Geonor =0.00tsf stopped casing hole @ 29.5 ft.	-36.2
32.5										-38.7
35.0			Beginning @ 34.5 ft and continuing to 59.5 ft - trace of sub-rounded gravels to 1.5 inch dia.	7	Ss		100	0-0-0-0-(0)	sampler sunk under own weight PP = 0.75tsf Geonor =0.21tsf	-41.2
37.5									after sample 7, stopped drilling - time: 8:00 PM; resumed drilling: 8/26/11; time: 8:00 AM	-43.7
40.0									no H2O pressure @ 39.5 ft; advanced casing to 39.5 ft prior to sampling PP = 1.25tsf	-46.2

GRAPH: BLOW COUNT 20 40 60 80; POCKET PEN (tsf) 1 2 3 4; VANE SHEAR (tsf) 0.2 0.4 0.6 0.8

P N D ENGINEERS, INC.

Logged By: PJD/SCS
Data Entry: PJD
Checked: CRS
Project No.: 112048.01
Date: Aug 2011

PORT CHILKOOT DOCK IMPROVEMENTS
Portage Cove
Haines, Alaska

BOREHOLE 1

FIGURE B-5
2 of 4

HAINES BOROUGH ALASKA

REVISIONS

REV.	DATE	DESCRIPTION	DWN.	CKD.	APP.

P N D ENGINEERS, INC.
9360 Glacier Highway Ste 100
Juneau, Alaska 99801
Phone: 907-586-2093
Fax: 907-586-2099
www.pndengineers.com

DESIGN: PJD CHECKED: CRS
DRAWN: PJD APPROVED: CRS
SCALE: NTS

STATE OF ALASKA 49010 Charles R. Somerville CE-8845 REGISTERED PROFESSIONAL ENGINEER
DATE: 3/1/13

HAINES BOROUGH
PORT CHILKOOT DOCK RENOVATION

SHEET TITLE: BOREHOLE LOGS

PND PROJECT NO.: 112048.08 DWG. FILE: 1.06–1.11.DWG

P1.06
SHEET 6 OF 62

Depth (feet)	Water Table	Graphic Symbol	SOIL DESCRIPTION: Soil Name, Color, Moisture Content, Relative Density, Soil Structure, Mineralogy, Other Information	SAMPLES: Number	Type	Location	Recovery % (RQD %)	Penetration Blows per 6/Inch (per foot) or {Rock Quality}	GRAPH: BLOW COUNT (20 40 60 80) / POCKET PEN (tsf) (1 2 3 4) / VANE SHEAR (tsf) (0.2 0.4 0.6 0.8)	COMMENTS: Casing Depth, Drilling Rate, Fluid Loss, Drill Pressure, Tests, Instrumentation, Additional Information	Elevation (feet)
40.0				8	Ss		100	0-1-1-1-(2)		Geonor =0.21tsf sampler sunk first 6 inches under own weight	-46.2
										stopped casing hole @ 39.5 ft.	
42.5											-48.7
										milky green/gray fines in cuttings	
45.0											-51.2
										steady, smooth advancement rate of drill steel	
47.5											-53.7
50.0			CLAYEY SILT (ML/CL) greenish gray mottled with dark gray, wet, low plasticity; slow dilatancy Consistency noticeably increases to stiff Soil within sampler tends to stick together when sample pulled; silt has an increased gritty texture	9	Ss		75	3-2-9-5-(11)		PP = 0.00tsf Geonor =0.42tsf	-56.2
										milky green/gray fines in cuttings	
52.5										steady, smooth advancement rate of drill steel	-58.7
55.0											-61.2
57.5			Gravel lense or boulder, see comment @59.5 ft to 60.6 ft: gray, wet, med dense; (%G = 0; % <No.200 = 0)							@ 57.5 ft drill steel bouncing	-63.7
60.0			SAND (SW)								-66.2

P N D ENGINEERS, INC.

Logged By: PJD/SCS
Data Entry: PJD
Checked: CRS
Project No.: 112048.01
Date: Aug 2011

PORT CHILKOOT DOCK IMPROVEMENTS
Portage Cove
Haines, Alaska

BOREHOLE 1

FIGURE B-5
3 of 4

Depth (feet)	Water Table	Graphic Symbol	SOIL DESCRIPTION: Soil Name, Color, Moisture Content, Relative Density, Soil Structure, Mineralogy, Other Information	SAMPLES: Number	Type	Location	Recovery % (RQD %)	Penetration Blows per 6/Inch (per foot) or {Rock Quality}	GRAPH: BLOW COUNT (20 40 60 80) / POCKET PEN (tsf) (1 2 3 4) / VANE SHEAR (tsf) (0.2 0.4 0.6 0.8)	COMMENTS: Casing Depth, Drilling Rate, Fluid Loss, Drill Pressure, Tests, Instrumentation, Additional Information	Elevation (feet)
60.0			SAND (SW)	10A	Ss		100	5-14-21-38-(35)		@ 62.5 ft drill steel bouncing w/ little advancement; bouncing ceased w/ drill steel rotating and no advancement, full H2O pressure, continued 10 minutes	-66.2
			CLAYEY SILT WITH GRAVEL (ML/CL) greenish gray, moist, very stiff; 15% fine to coarse, subangular to subrounded gravel; 5% sand	10B	Ss		65				
62.5			REFUSAL: see comment							Terminated Drilling: 8/26/11; Time: 11:00AM	-68.7
65.0											-71.2
67.5											-73.7
70.0											-76.2
72.5											-78.7
75.0											-81.2
77.5											-83.7
80.0											-86.2

P N D ENGINEERS, INC.

Logged By: PJD/SCS
Data Entry: PJD
Checked: CRS
Project No.: 112048.01
Date: Aug 2011

PORT CHILKOOT DOCK IMPROVEMENTS
Portage Cove
Haines, Alaska

BOREHOLE 1

FIGURE B-5
4 of 4

HAINES BOROUGH ALASKA

REVISIONS

REV.	DATE	DESCRIPTION	DWN.	CKD.	APP.

P N D ENGINEERS, INC.
9360 Glacier Highway Ste 100
Juneau, Alaska 99801
Phone: 907-586-2093
Fax: 907-586-2099
www.pndengineers.com

DESIGN: PJD CHECKED: CRS
DRAWN: PJD APPROVED: CRS
SCALE: NTS

STATE OF ALASKA 24010 Charles R. Somerville CE-8845 REGISTERED PROFESSIONAL ENGINEER
DATE: 3/1/13

HAINES BOROUGH
PORT CHILKOOT DOCK RENOVATION

SHEET TITLE: BOREHOLE LOGS

PND PROJECT NO.: 112048.08 DWG. FILE: 1.06-1.11.DWG

P1.07
SHEET 7 OF 62

Depth (feet)	Water Table	Graphic Symbol	SOIL DESCRIPTION: Soil Name, Color, Moisture Content, Relative Density, Soil Structure, Mineralogy, Other Information	SAMPLES: Number	Type	Location	Recovery % (RQD %)	Penetration Blows per 6/Inch (per foot) or {Rock Quality}	COMMENTS: Casing Depth, Drilling Rate, Fluid Loss, Drill Pressure, Tests, Instrumentation, Additional Information	Elevation (feet)
0.0			No surface sample taken						Begin Drilling: 8/26/11; Time: 2:30PM	-3.6
2.5									sand with shell fragments in cuttings	-6.1
5.0			POORLY GRADED SAND (SP) gray, wet, medium dense; 100% sand; petroleum odor	1	Ss		56	12-16-21-(37)	@ 7 ft. notable increase in casing BPF due to hitting debris (fuel container ?); slight oil sheen in wash w/ strong petroleum odor	-8.6
7.5										-11.1
10.0				2A	Ss		26	7-10-4-1-(14)		-13.6
			Sample 2B: greenish gray; wet; very soft; %G=0; %S=85; %F=15; shell fragments noted	2B	Ss		100			
12.5										-16.1
									milky green/gray fines in cuttings	
15.0			CLAYEY SILT (ML/CL) Consistency of cohesive sediment varies from very soft to stiff	3	Ss		0	0-0-0-0-(0)	"no recovery" sampler sunk under own weight	-18.6
17.5										-21.1
									abundant white broken shell fragments in the cuttings	
20.0										-23.6

GRAPH: ■ BLOW COUNT (20, 40, 60, 80); ● POCKET PEN (tsf) (1, 2, 3, 4); ▲ VANE SHEAR (tsf) (0.2, 0.4, 0.6, 0.8)

P N D ENGINEERS, INC.

Logged By:	PJD/SCS
Data Entry:	PJD
Checked:	CRS
Project No.:	112048.01
Date:	Aug 2011

PORT CHILKOOT DOCK IMPROVEMENTS
Portage Cove
Haines, Alaska

BOREHOLE 2

FIGURE B-6
1 of 4

Depth (feet)	Water Table	Graphic Symbol	SOIL DESCRIPTION: Soil Name, Color, Moisture Content, Relative Density, Soil Structure, Mineralogy, Other Information	SAMPLES: Number	Type	Location	Recovery % (RQD %)	Penetration Blows per 6/Inch (per foot) or {Rock Quality}	COMMENTS: Casing Depth, Drilling Rate, Fluid Loss, Drill Pressure, Tests, Instrumentation, Additional Information	Elevation (feet)
20.0			Top 3" in sample #4 well graded sand (SW)	4	Ss		100	0-0-1-1-(1)	PP = 3.00tsf Geonor =0.42tsf sampler sunk first 12" under own weight driller stopped casing @ 20 ft.	-23.6
22.5										-26.1
			Sand or gravel lens based on nature of drill steel						@ 24 ft driller noted grinding of drill steel	
25.0				5	Ss		13	5-5-3-5-(8)		-28.6
27.5										-31.1
30.0			CLAYEY SILT (ML/CL) greenish gray mottled with dark gray, wet, low to medium plasticity; slow dilatancy; predominantly fines <No.200, with intervals of coarser material, based on drilling action and material noted at sample depth	6	Ss		75	4-5-7-8-(12)	PP = 4.50tsf Geonor =0.96tsf	-33.6
			Soil w/in sampler breaks into segments when pulled apart; slight gritty texture							
32.5										-36.1
			Consistency of soil increasing from stiff to very stiff							
35.0			Bottom of sample #7 (2" of well-graded sand)	7	Ss		33	7-9-10-13-(19)	@ 36 ft: grinding action of drill steel	-38.6
37.5										-41.1
40.0										-43.6

GRAPH: ■ BLOW COUNT (20, 40, 60, 80); ● POCKET PEN (tsf) (1, 2, 3, 4); ▲ VANE SHEAR (tsf) (0.2, 0.4, 0.6, 0.8)

P N D ENGINEERS, INC.

Logged By:	PJD/SCS
Data Entry:	PJD
Checked:	CRS
Project No.:	112048.01
Date:	Aug 2011

PORT CHILKOOT DOCK IMPROVEMENTS
Portage Cove
Haines, Alaska

BOREHOLE 2

FIGURE B-6
2 of 4

HAINES BOROUGH ALASKA

REVISIONS

REV.	DATE	DESCRIPTION	DWN.	CKD.	APP.

P N D ENGINEERS, INC.
9360 Glacier Highway Ste 100
Juneau, Alaska 99801
Phone: 907-586-2093
Fax: 907-586-2099
www.pndengineers.com

DESIGN: PJD CHECKED: CRS
DRAWN: PJD APPROVED: CRS
SCALE: NTS

STATE OF ALASKA — PJD — Charles R. Somerville — CE-8845 — REGISTERED PROFESSIONAL ENGINEER
DATE: 3/1/13

HAINES BOROUGH
PORT CHILKOOT DOCK RENOVATION

SHEET TITLE: BOREHOLE LOGS

PND PROJECT NO.: 112048.08 DWG. FILE: 1.06-1.11.DWG

P1.08

SHEET 8 OF 62

Depth (feet)	Water Table	Graphic Symbol	SOIL DESCRIPTION: Soil Name, Color, Moisture Content, Relative Density, Soil Structure, Mineralogy, Other Information	SAMPLES: Number	Type	Location	Recovery % (RQD %)	Penetration Blows per 6/Inch (per foot) or {Rock Quality}	GRAPH (BLOW COUNT 20 40 60 80; POCKET PEN (tsf) 1 2 3 4; VANE SHEAR (tsf) 0.2 0.4 0.6 0.8)	COMMENTS: Casing Depth, Drilling Rate, Fluid Loss, Drill Pressure, Tests, Instrumentation, Additional Information	Elevation (feet)
40.0			@ 40 ft: 3" of silt w/ sand	8	Ss		100	1-0-2-3-(2)		PP = 0.50tsf Geonor =0.23tsf sampler sunk 4" under own weight after 1st blow Stopped Drilling @ time: 7:25PM; Resumed drilling 8/27/11; Time: 8:00AM	-43.6
42.5			Intermittant sand or gravel lenses interpreted down to 50 ft based on nature of drill steel								-46.1
45.0			CLAYEY SILT WITH SAND OR GRAVEL							driller noted sands or gravels down to 50 ft.	-48.6
47.5											-51.1
50.0			POORLY GRADED SAND (SP) gray black, wet, loose; 0% gravel; 100% coarse sand; 0% fines	9A	Ss		53	9-6-6-10-(12)			-53.6
			Sample 9B: greenish gray; wet; firm; 5% fine to medium, sub-rounded gravel; 10% sand; 85% fines; low to medium plasticity; slow dilantancy; gritty texture	9B	Ss		67			PP = 1.25tsf Geonor =0.37tsf	
52.5											-56.1
55.0			CLAYEY SILT WITH SAND (ML/CL)								-58.6
57.5											-61.1
60.0											-63.6

P N D ENGINEERS, INC.

Logged By: PJD/SCS
Data Entry: PJD
Checked: CRS
Project No.: 112048.01
Date: Aug 2011

PORT CHILKOOT DOCK IMPROVEMENTS
Portage Cove
Haines, Alaska

BOREHOLE 2

FIGURE B-6
3 of 4

Depth (feet)	Water Table	Graphic Symbol	SOIL DESCRIPTION: Soil Name, Color, Moisture Content, Relative Density, Soil Structure, Mineralogy, Other Information	SAMPLES: Number	Type	Location	Recovery % (RQD %)	Penetration Blows per 6/Inch (per foot) or {Rock Quality}	GRAPH (BLOW COUNT 20 40 60 80; POCKET PEN (tsf) 1 2 3 4; VANE SHEAR (tsf) 0.2 0.4 0.6 0.8)	COMMENTS: Casing Depth, Drilling Rate, Fluid Loss, Drill Pressure, Tests, Instrumentation, Additional Information	Elevation (feet)
60.0			No samples obtained from 60 ft to E.O.H.							switched to SH sampler and attempted sample @ 60 ft; sampler couldn't reach depth; driller used tricone bit and cleaned down to 65 ft looking for refusal; continued down to 70 ft	-63.6
			Soil classification based on nature of drill steel and nearby sampled holes								
62.5										added casing; first 5 ft section: casing blow counts 25/ft; preceding 10 ft of casing: 27/ft	-66.1
65.0										noticeable grinding action of drill steel down to 80 ft	-68.6
67.5			SANDY CLAYEY SILT WITH GRAVEL (ML/CL)								-71.1
70.0											-73.6
72.5											-76.1
75.0										drill steel noticeably bouncing	-78.6
77.5										Terminated drilling:8/27/11; Time: 12:30PM	-81.1
80.0			Terminated borehole with NO REFUSAL								-83.6

P N D ENGINEERS, INC.

Logged By: PJD/SCS
Data Entry: PJD
Checked: CRS
Project No.: 112048.01
Date: Aug 2011

PORT CHILKOOT DOCK IMPROVEMENTS
Portage Cove
Haines, Alaska

BOREHOLE 2

FIGURE B-6
4 of 4

HAINES BOROUGH ALASKA

REVISIONS

REV.	DATE	DESCRIPTION	DWN.	CKD.	APP.

P N D ENGINEERS, INC.
9360 Glacier Highway Ste 100
Juneau, Alaska 99801
Phone: 907-586-2093
Fax: 907-586-2099
www.pndengineers.com

DESIGN: PJD CHECKED: CRS
DRAWN: PJD APPROVED: CRS
SCALE: NTS

STATE OF ALASKA 49TH Charles R. Somerville CE-8845 REGISTERED PROFESSIONAL ENGINEER
DATE: 3/1/13

HAINES BOROUGH
PORT CHILKOOT DOCK RENOVATION

SHEET TITLE: BOREHOLE LOGS

PND PROJECT NO.: 112048.08 DWG. FILE: 1.06–1.11.DWG

P1.09
SHEET 9 OF 62

Depth (feet)	Water Table	Graphic Symbol	SOIL DESCRIPTION: Soil Name, Color, Moisture Content, Relative Density, Soil Structure, Mineralogy, Other Information	SAMPLES: Number	Type	Location	Recovery % (RQD %)	Penetration Blows per 6/Inch (per foot) or {Rock Quality}	COMMENTS: Casing Depth, Drilling Rate, Fluid Loss, Drill Pressure, Tests, Instrumentation, Additional Information	Elevation (feet)
0.0			No surface sample taken; where no sampling, soil classification based on nearby sampled holes						Begin Drilling:8/27/11; Time:1:55PM	0.4
									@ 2ft: wood debris in cuttings	
2.5										-2.1
									watching cuttings for (SP)-(ML/CL) contact as seen in BH-2 and BH-3	
5.0										-4.6
			POORLY GRADED SAND (SP)							
7.5										-7.1
10.0										-9.6
			Gray, wet, loose; 0% gravel; 100% medium grained sand; 0% fines	1	Ss		9	5-5-0-0-(5)	sampler sunk under own weight after 10 blows	
12.5										-12.1
15.0				2	Ss		9	0-0-0-2-(0)	sampler sunk under own weight to 18", 2 blows for final 6"	-14.6
			CLAYEY SILT (ML/CL) greenish gray, wet, very soft; 100% fines; low to medium plasticity; slow dilatancy; top 2 inches sand, bottom 2 inches silt							
17.5										-17.1
			SANDY CLAYEY SILT WITH GRAVEL (ML/CL)					3-6-11-16-	PP = 4.50tsf Geonor =1.29tsf	
20.0										-19.6

GRAPH: BLOW COUNT 20 40 60 80; POCKET PEN (tsf) 1 2 3 4; VANE SHEAR (tsf) 0.2 0.4 0.6 0.8

P N D ENGINEERS, INC.

Logged By:	PJD/SCS
Data Entry:	PJD
Checked:	CRS
Project No.:	112048.01
Date:	Aug 2011

PORT CHILKOOT DOCK IMPROVEMENTS
Portage Cove
Haines, Alaska

BOREHOLE 3 — FIGURE B-7 1 of 3

Depth (feet)	Water Table	Graphic Symbol	SOIL DESCRIPTION: Soil Name, Color, Moisture Content, Relative Density, Soil Structure, Mineralogy, Other Information	SAMPLES: Number	Type	Location	Recovery % (RQD %)	Penetration Blows per 6/Inch (per foot) or {Rock Quality}	COMMENTS: Casing Depth, Drilling Rate, Fluid Loss, Drill Pressure, Tests, Instrumentation, Additional Information	Elevation (feet)
20.0				3	Ss		100	(17)		-19.6
22.5									milky green/gray fines in the cuttings	-22.1
25.0				4	Ss		100	6-8-13-18-(21)	PP = 4.50tsf Geonor =1.10tsf	-24.6
27.5										-27.1
30.0			SANDY CLAYEY SILT WITH GRAVEL (ML/CL) greenish gray, moist, very stiff; 15% fine to coarse, subrounded gravel; 20% sand; 65% fines; low plasticity; slow dilatancy	5	Ss		9	6-6-10-14-(16)	after sample 5 driller stopped casing hole; probing for refusal	-29.6
32.5										-32.1
35.0										-34.6
37.5										-37.1
40.0										-39.6

GRAPH: BLOW COUNT 20 40 60 80; POCKET PEN (tsf) 1 2 3 4; VANE SHEAR (tsf) 0.2 0.4 0.6 0.8

P N D ENGINEERS, INC.

Logged By:	PJD/SCS
Data Entry:	PJD
Checked:	CRS
Project No.:	112048.01
Date:	Aug 2011

PORT CHILKOOT DOCK IMPROVEMENTS
Portage Cove
Haines, Alaska

BOREHOLE 3 — FIGURE B-7 2 of 3

HAINES BOROUGH ALASKA

REVISIONS

REV.	DATE	DESCRIPTION	DWN.	CKD.	APP.

P N D ENGINEERS, INC.
9360 Glacier Highway Ste 100
Juneau, Alaska 99801
Phone: 907-586-2093
Fax: 907-586-2099
www.pndengineers.com

DESIGN: PJD CHECKED: CRS
DRAWN: PJD APPROVED: CRS
SCALE: NTS

STATE OF ALASKA — 49TH — Charles R. Somerville — CE-8845 — REGISTERED PROFESSIONAL ENGINEER
DATE: 3/1/13

HAINES BOROUGH
PORT CHILKOOT DOCK RENOVATION

SHEET TITLE: BOREHOLE LOGS

PND PROJECT NO.: 112048.08 DWG. FILE: 1.06-1.11.DWG

P1.10
SHEET 10 OF 62

Depth (feet)	Water Table	Graphic Symbol	SOIL DESCRIPTION: Soil Name, Color, Moisture Content, Relative Density, Soil Structure, Mineralogy, Other Information	SAMPLES: Number	Type	Location	Recovery % (RQD %)	Penetration Blows per 6/Inch (per foot) or {Rock Quality}	GRAPH: BLOW COUNT (20 40 60 80); POCKET PEN (tsf) (1 2 3 4); VANE SHEAR (tsf) (0.2 0.4 0.6 0.8)	COMMENTS: Casing Depth, Drilling Rate, Fluid Loss, Drill Pressure, Tests, Instrumentation, Additional Information	Elevation (feet)
40.0										@ 39.5FT sampler sunk first 6" under own weight	-39.6
			No samples obtained from 40 ft to E.O.H.; soil classification based on nature of drill steel, see comments								
42.5										milky greenish-gray colored fines in cuttings; intermittent grinding of drill steel beginning @ 45 ft	-42.1
45.0			SANDY CLAYEY SILT WITH GRAVEL (ML/CL)								-44.6
47.5										violent bouncing of drill steel beginning @ 48 ft	-47.1
50.0			Increase in gravels, cobbles, or boulders based on action of drill steel, see comments								-49.6
52.5										slow rate of drill steel advancement driller stated soil in hole is beginning to slough	-52.1
55.0			NO REFUSAL: terminated borehole with slow rate of drill steel advancement							Terminated drilling: 8/27/11; Time: 5:50PM	-54.6
57.5											-57.1
60.0											-59.6

P | N | D
ENGINEERS, INC.

Logged By:	PJD/SCS
Data Entry:	PJD
Checked:	CRS
Project No.:	112048.01
Date:	Aug 2011

PORT CHILKOOT DOCK IMPROVEMENTS
Portage Cove
Haines, Alaska

BOREHOLE 3

FIGURE B-7
3 of 3

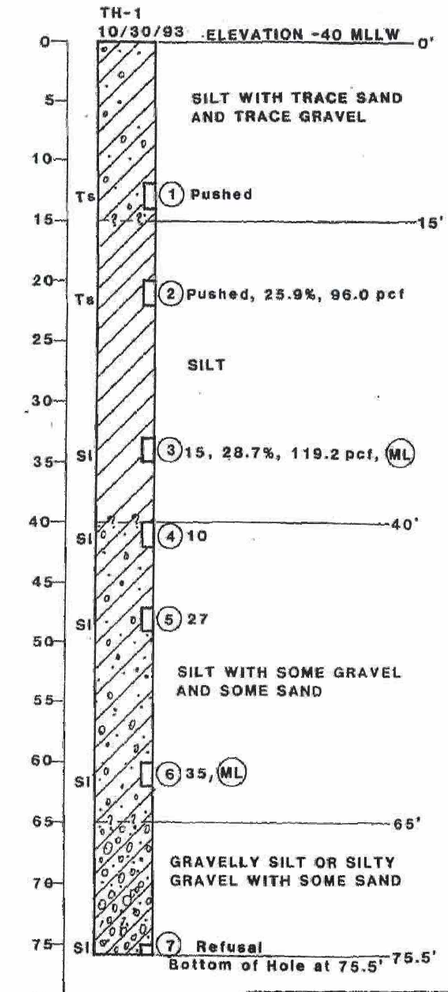

PORT CHILKOOT EXPANSION
GEOTECHNICAL INVESTIGATION

Designed: HA
Drawn: AM
Checked: MH
Project No. 93229
Date: 12/93
Scale:

Peratrovich, Nottingham & Drage, Inc.
Engineering Consultants
1506 West 36th Avenue,
Anchorage, Alaska 99503
(907) 561-1011

TEST HOLE TH -1

Figure B-8

NOTE:
TEST HOLE-1 WAS DRILLED AS PART OF A PREVIOUS INVESTIGATION AND IS PROVIDED FOR INFORMATIONAL PURPOSES.

HAINES BOROUGH ALASKA

REVISIONS

REV.	DATE	DESCRIPTION	DWN.	CKD.	APP.

P | N | D
ENGINEERS, INC.

9360 Glacier Highway Ste 100
Juneau, Alaska 99801
Phone: 907-586-2093
Fax: 907-586-2099
www.pndengineers.com

DESIGN: PJD CHECKED: CRS
DRAWN: PJD APPROVED: CRS
SCALE: NTS

STATE OF ALASKA
Charles R. Somerville
CE-8845
REGISTERED PROFESSIONAL ENGINEER
DATE: 3/1/13

HAINES BOROUGH
PORT CHILKOOT DOCK RENOVATION

SHEET TITLE:
BOREHOLE LOGS

PND PROJECT NO.: 112048.08 DWG. FILE: 1.06-1.11.DWG

P1.11
SHEET 11 OF 62

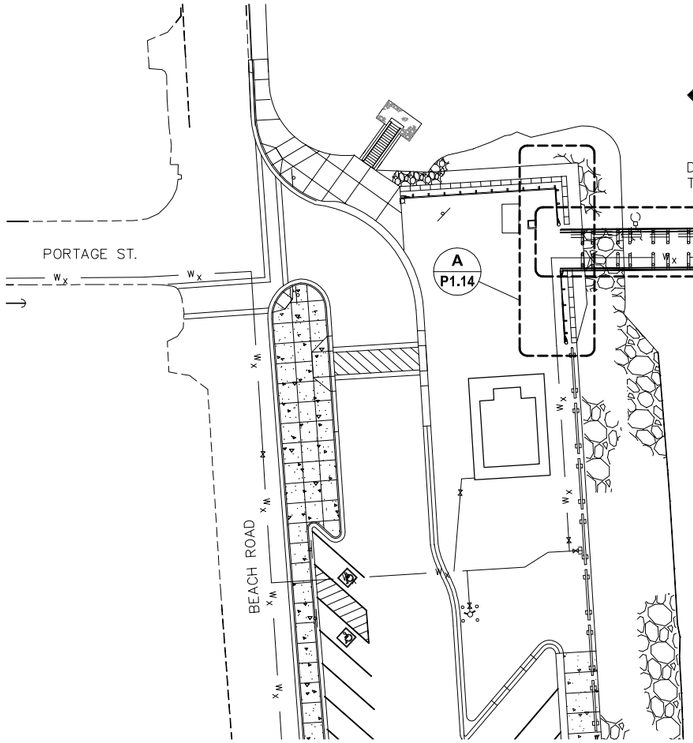

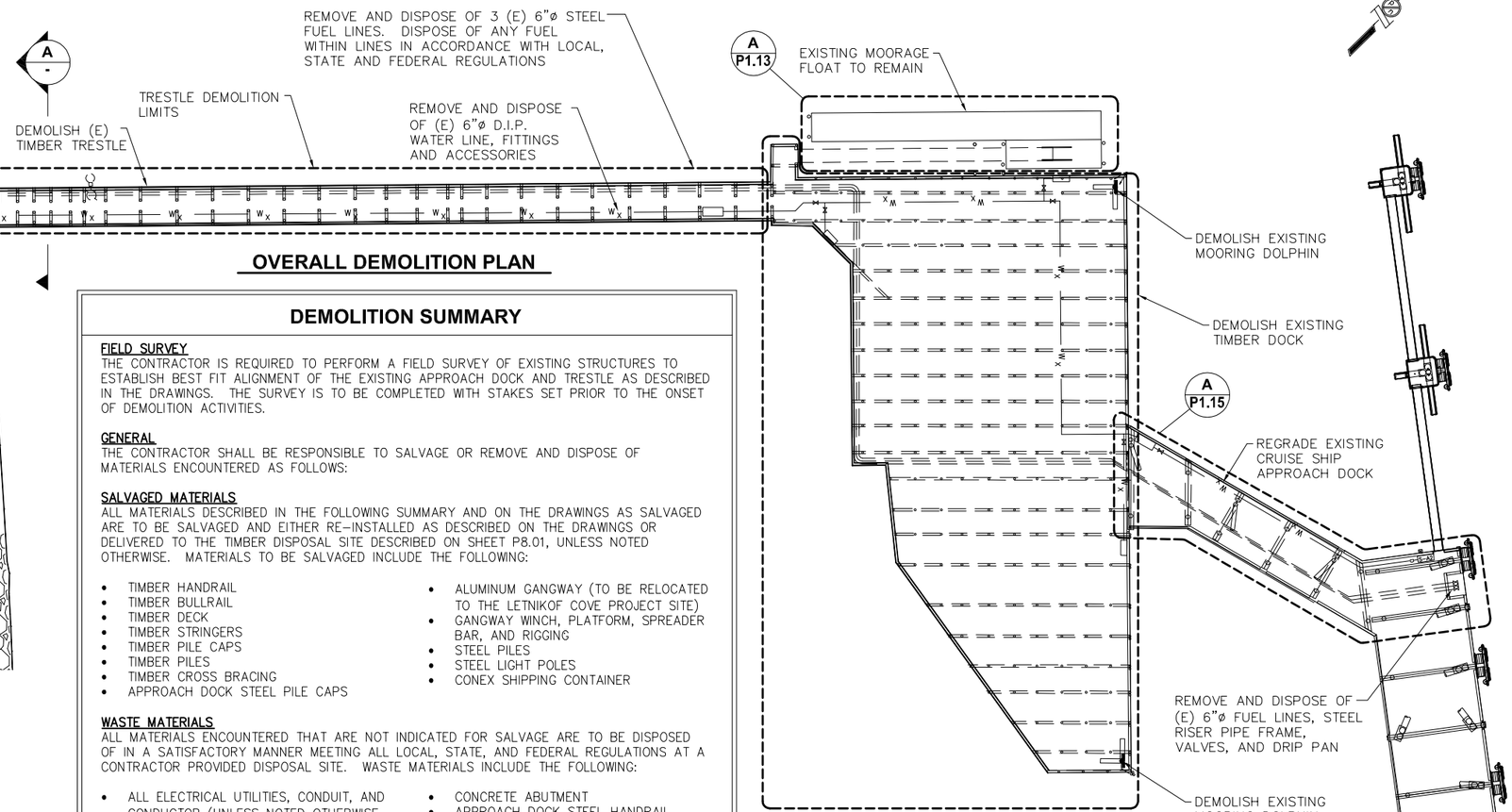

OVERALL DEMOLITION PLAN

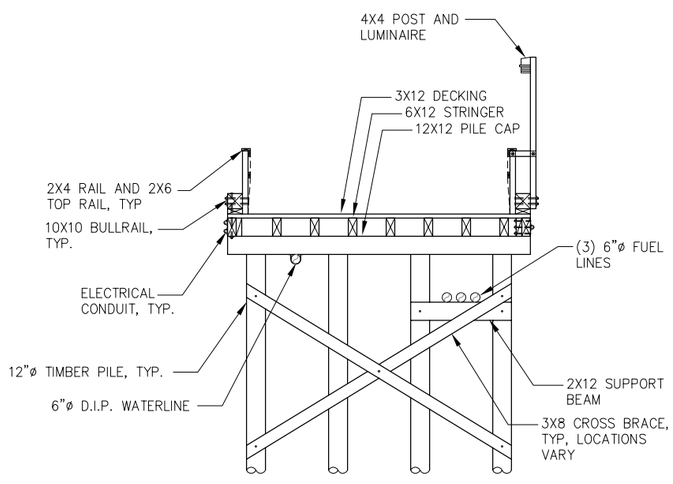

A
-
EXISTING TRESTLE SECTION

SCALE IN FEET
0 4 8 FT.

DEMOLITION SUMMARY

FIELD SURVEY
THE CONTRACTOR IS REQUIRED TO PERFORM A FIELD SURVEY OF EXISTING STRUCTURES TO ESTABLISH BEST FIT ALIGNMENT OF THE EXISTING APPROACH DOCK AND TRESTLE AS DESCRIBED IN THE DRAWINGS. THE SURVEY IS TO BE COMPLETED WITH STAKES SET PRIOR TO THE ONSET OF DEMOLITION ACTIVITIES.

GENERAL
THE CONTRACTOR SHALL BE RESPONSIBLE TO SALVAGE OR REMOVE AND DISPOSE OF MATERIALS ENCOUNTERED AS FOLLOWS:

SALVAGED MATERIALS
ALL MATERIALS DESCRIBED IN THE FOLLOWING SUMMARY AND ON THE DRAWINGS AS SALVAGED ARE TO BE SALVAGED AND EITHER RE-INSTALLED AS DESCRIBED ON THE DRAWINGS OR DELIVERED TO THE TIMBER DISPOSAL SITE DESCRIBED ON SHEET P8.01, UNLESS NOTED OTHERWISE. MATERIALS TO BE SALVAGED INCLUDE THE FOLLOWING:

- TIMBER HANDRAIL
- TIMBER BULLRAIL
- TIMBER DECK
- TIMBER STRINGERS
- TIMBER PILE CAPS
- TIMBER PILES
- TIMBER CROSS BRACING
- APPROACH DOCK STEEL PILE CAPS
- ALUMINUM GANGWAY (TO BE RELOCATED TO THE LETNIKOF COVE PROJECT SITE)
- GANGWAY WINCH, PLATFORM, SPREADER BAR, AND RIGGING
- STEEL PILES
- STEEL LIGHT POLES
- CONEX SHIPPING CONTAINER

WASTE MATERIALS
ALL MATERIALS ENCOUNTERED THAT ARE NOT INDICATED FOR SALVAGE ARE TO BE DISPOSED OF IN A SATISFACTORY MANNER MEETING ALL LOCAL, STATE, AND FEDERAL REGULATIONS AT A CONTRACTOR PROVIDED DISPOSAL SITE. WASTE MATERIALS INCLUDE THE FOLLOWING:

- ALL ELECTRICAL UTILITIES, CONDUIT, AND CONDUCTOR (UNLESS NOTED OTHERWISE ON THE PLANS)
- TELEPHONE CONDUIT AND CONDUCTOR
- PVC IRRIGATION PIPES
- 6" DIAMETER STEEL FUEL PIPES, HANGERS, RISERS, DRIP PAN, AND RISER PIPE FRAME
- 6" DIAMETER DIP WATERLINE, HANGERS, VALVES, METERS, BACKFLOW PREVENTERS AND FITTINGS
- CONCRETE ABUTMENT
- APPROACH DOCK STEEL HANDRAIL ASSEMBLIES
- STEEL EMERGENCY ACCESS LADDERS
- STEEL FENDER PILE BRACKETS
- MISC. STEEL GUY CABLES
- WELDED WIRE FABRIC ATTACHED TO HANDRAIL
- CONCRETE RETAINING WALL BLOCKS
- GEOTEXTILE MESH
- ASPHALT PAVEMENT
- WOOD FACADE, RAMP, AND ROOF DESCRIBED ON SHEET P1.13

FUEL LINES
FUEL LINES WERE PURGED OF FUEL WHEN THEY WERE DECOMMISSIONED. SOME CONTAMINANTS MAY REMAIN.

SCOTT POSEY OF DELTA WESTERN REPORTS THAT APPROXIMATELY 3 YEARS AGO, THEIR MAINTENANCE CREW DRAINED AND RAN A PIG THROUGH THE LINES; A FOAM FOOTBALL OF SORTS THAT IS DESIGNED TO PUSH PRODUCT AHEAD AS IT IS PROPELLED BY COMPRESSED AIR. THE LINES WERE DEEMED CLEAR OF PRODUCT AT THAT TIME. IT MUST BE SAID THAT THE PIPELINES HAVE BEEN SUBJECT TO EXPANSION AND CONTRACTION AS WELL AS CONDENSATION FROM VARYING ATMOSPHERIC CONDITIONS. THEY WERE ALSO CONSIDERED IN EXTREMELY POOR CONDITION STRUCTURALLY. THERE EXISTS A REASONABLE POSSIBILITY THAT SOME RESIDUAL FUEL PRODUCTS REMAIN OR HAVE ACCUMULATED IN LOW SPOTS OR JUNCTIONS. WE ENCOURAGE YOU TO PROMOTE CAUTION AND PREPARE TO ENCOUNTER CONTAMINANTS ACCORDINGLY.

CONTACT DELTA WESTERN FOR FURTHER DETAILS.

REVISIONS

REV.	DATE	DESCRIPTION	DWN.	CKD.	APP.

PND ENGINEERS, INC.
9360 Glacier Highway Ste 100
Juneau, Alaska 99801
Phone: 907-586-2093
Fax: 907-586-2099
www.pndengineers.com

DESIGN: SRY CHECKED: CRS
DRAWN: SRY APPROVED: CRS
SCALE: SCALE IN FEET 0 30 60 FT.

STATE OF ALASKA — Charles R. Somerville — CE-8845 — REGISTERED PROFESSIONAL ENGINEER
DATE: 3/1/13

HAINES BOROUGH
PORT CHILKOOT DOCK RENOVATION

SHEET TITLE:
OVERALL DEMOLITION PLAN

PND PROJECT NO.: 112048.08 DWG. FILE: 1.12.DWG

P1.12
SHEET 12 OF 62

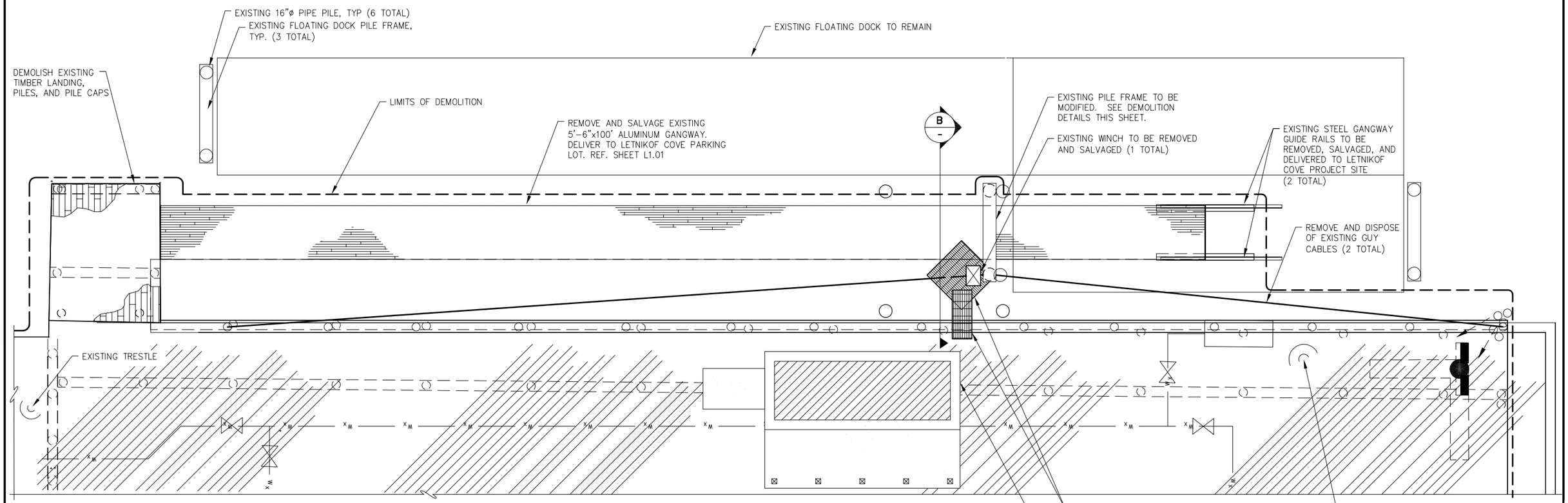

A
P1.12
GANGWAY DEMOLITION PLAN

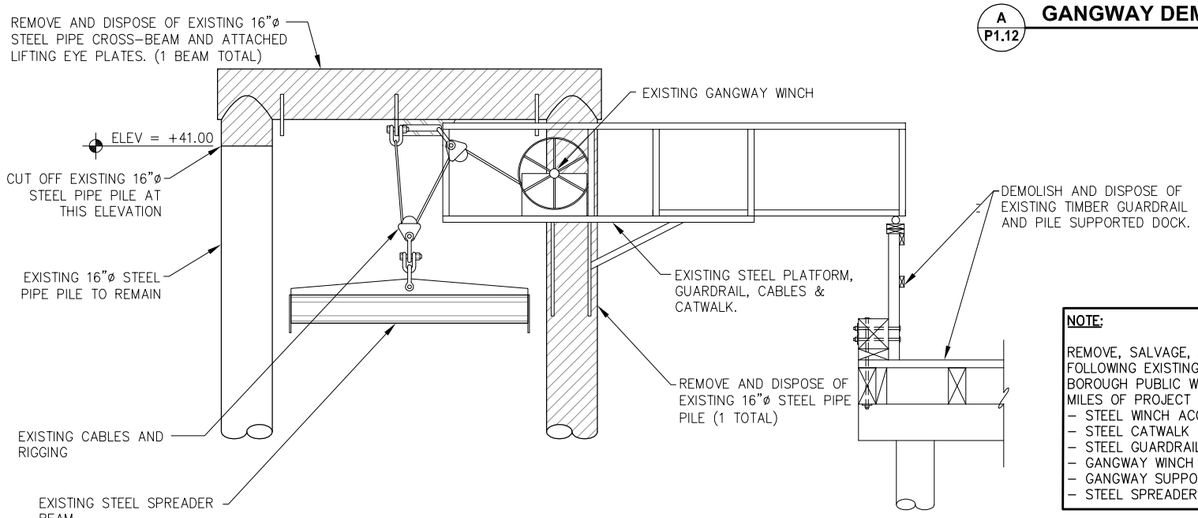

B
-
GANGWAY FRAME ELEVATION
DEMOLITION DETAILS

NOTE:

REMOVE, SALVAGE, AND DELIVER THE FOLLOWING EXISTING ITEMS TO THE HAINES BOROUGH PUBLIC WORKS SHOP WITHIN 2 MILES OF PROJECT SITE:
- STEEL WINCH ACCESS PLATFORM
- STEEL CATWALK
- STEEL GUARDRAIL
- GANGWAY WINCH
- GANGWAY SUPPORT CABLES AND RIGGING
- STEEL SPREADER BAR

HAINES BOROUGH ALASKA

REVISIONS

REV.	DATE	DESCRIPTION	DWN.	CKD.	APP.

PND ENGINEERS, INC.
9360 Glacier Highway Ste 100
Juneau, Alaska 99801
Phone: 907-586-2093
Fax: 907-586-2099
www.pndengineers.com

DESIGN: SRY CHECKED: CRS
DRAWN: SRY APPROVED: CRS
SCALE: SCALE IN FEET 0 50 100 FT.

STATE OF ALASKA
Charles R. Somerville
CE-8845
REGISTERED PROFESSIONAL ENGINEER
DATE: 3/1/13

HAINES BOROUGH
PORT CHILKOOT DOCK RENOVATION

SHEET TITLE:
GANGWAY AND GANGWAY LANDING DEMOLITION PLAN

PND PROJECT NO.: 112048.08 DWG. FILE: 1.13.DWG

P1.13
SHEET 13 OF 62

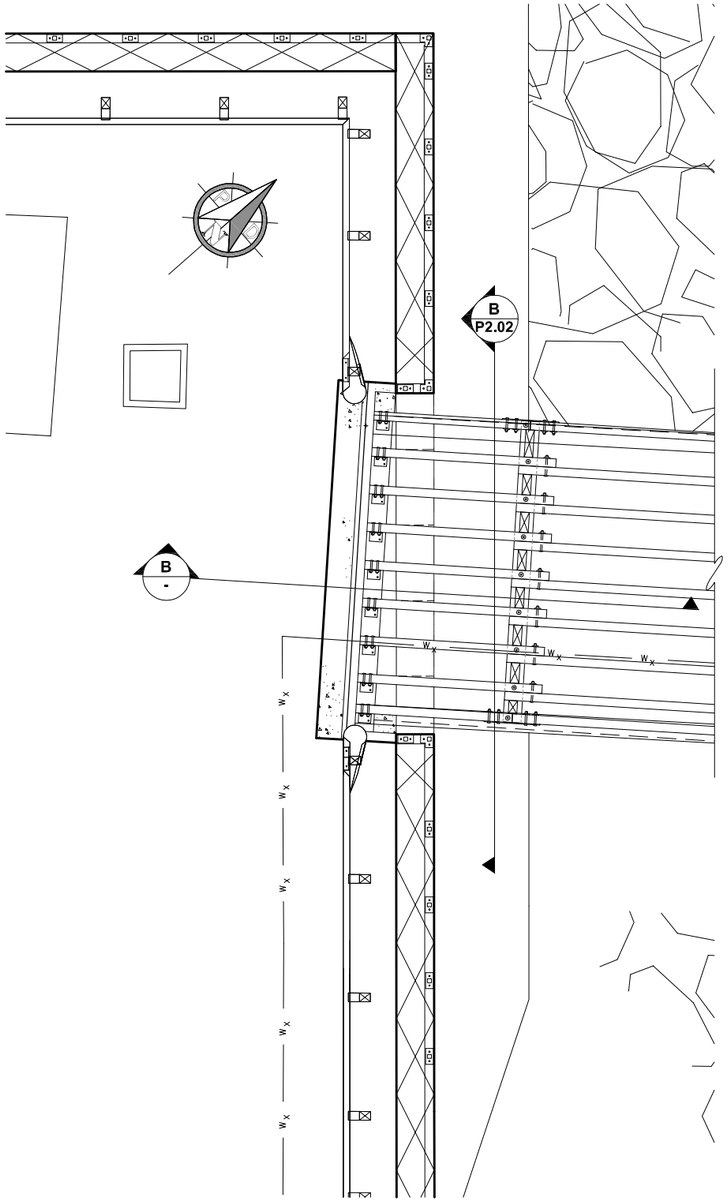

A
P1.12
ABUTMENT DEMOLITION PLAN

SCALE IN FEET
0 4 8 FT.

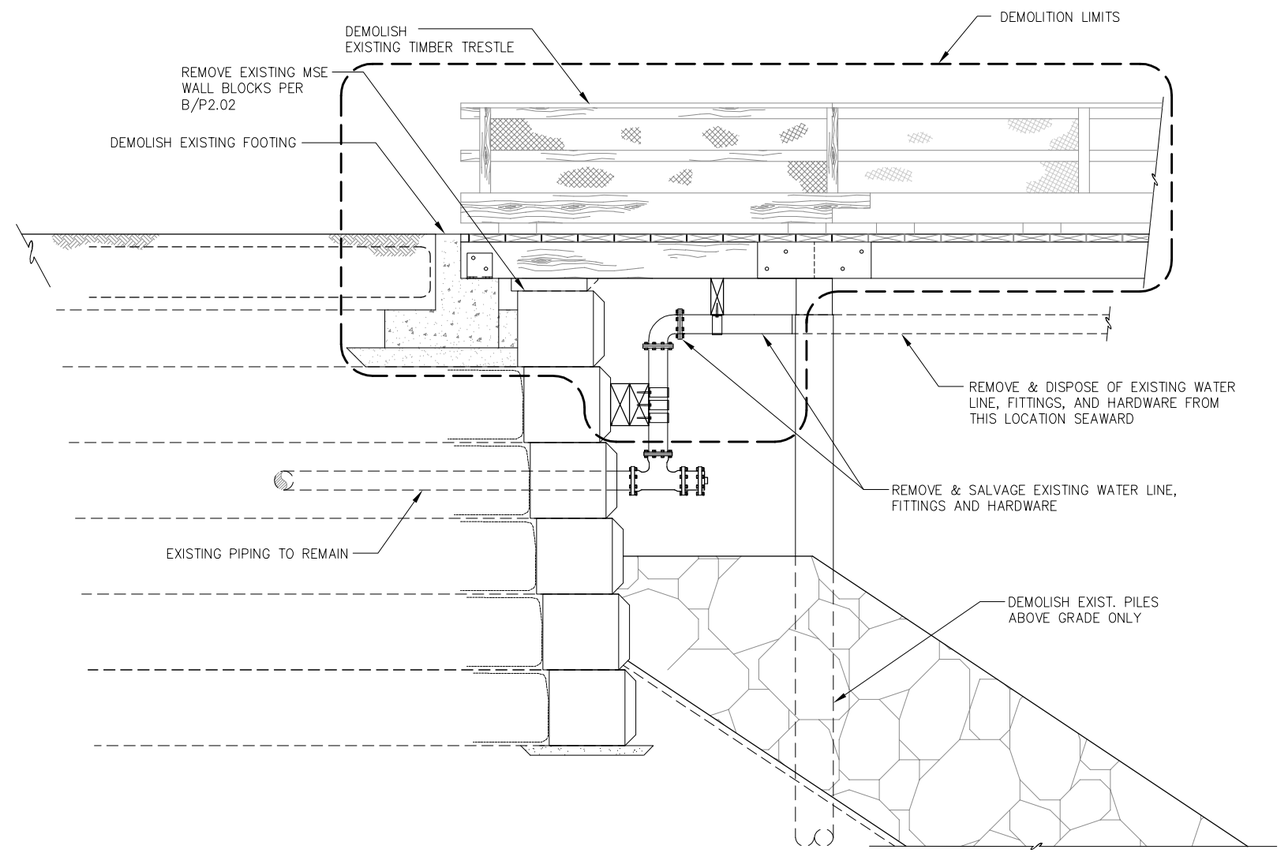

B
-
ABUTMENT DEMOLITION SECTION

SCALE IN FEET
0 2' 4'

HAINES BOROUGH ALASKA

REVISIONS

REV.	DATE	DESCRIPTION	DWN.	CKD.	APP.

PND ENGINEERS, INC.
9360 Glacier Highway Ste 100
Juneau, Alaska 99801
Phone: 907-586-2093
Fax: 907-586-2099
www.pndengineers.com

DESIGN: SRY CHECKED: CRS
DRAWN: SRY APPROVED: CRS
SCALE: AS SHOWN

STATE OF ALASKA 2010 Charles R. Somerville CE-8845 REGISTERED PROFESSIONAL ENGINEER
DATE: 3/1/13

HAINES BOROUGH
PORT CHILKOOT DOCK RENOVATION

SHEET TITLE:
ABUTMENT DEMOLITION PLAN

PND PROJECT NO.: 112048.08 DWG. FILE: 1.14.DWG

P1.14
SHEET 14 OF 62

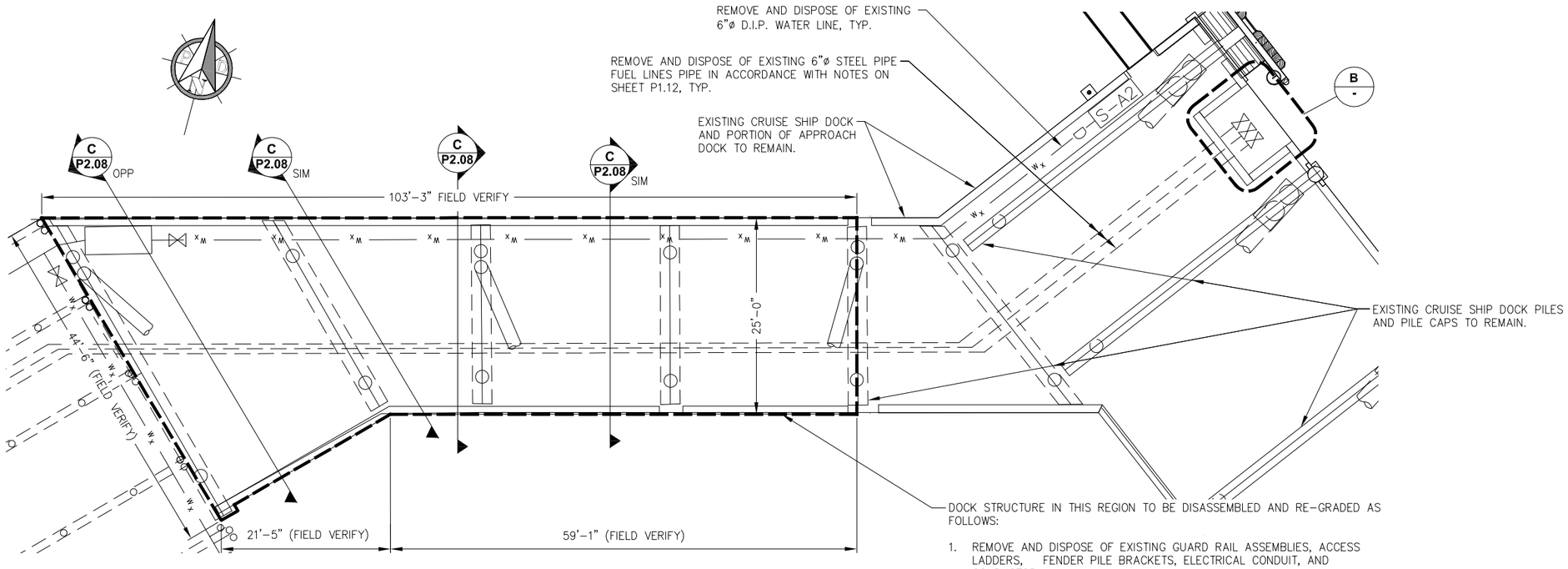

DOCK STRUCTURE IN THIS REGION TO BE DISASSEMBLED AND RE-GRADED AS FOLLOWS:

1. REMOVE AND DISPOSE OF EXISTING GUARD RAIL ASSEMBLIES, ACCESS LADDERS, FENDER PILE BRACKETS, ELECTRICAL CONDUIT, AND CONDUCTOR.
2. REMOVE AND SALVAGE EXISTING STEEL LIGHT POLES AND LIGHT FIXTURES.
3. REMOVE AND SALVAGE EXISTING TIMBER BULLRAIL, DECKING, AND STRINGERS TO BE RE-INSTALLED ON RE-GRADED APPROACH DOCK OR DISPOSED OF AND REPLACED WITH NEW MATERIAL AT CONTRACTOR'S OPTION.
4. REMOVE AND SALVAGE EXISTING STEEL PILE CAPS TO BE MODIFIED AND RE-INSTALLED ON RE-GRADED APPROACH DOCK. REF. DETAIL C/P2.08 FOR VERT. AND BATTER PILE CUTOFF ELEVATIONS.

A P1.12 **CRUISE SHIP APPROACH DOCK DEMOLITION PLAN**

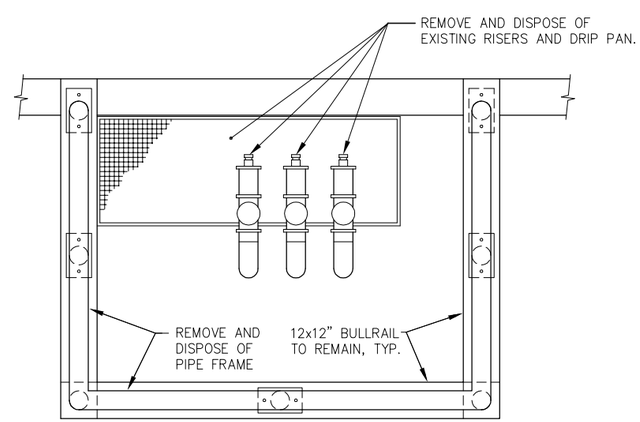

B - **FUEL RISER DEMOLITION PLAN**

REVISIONS

REV.	DATE	DESCRIPTION	DWN.	CKD.	APP.

PND ENGINEERS, INC.
9360 Glacier Highway Ste 100
Juneau, Alaska 99801
Phone: 907-586-2093
Fax: 907-586-2099
www.pndengineers.com

DESIGN: SRY CHECKED: CRS
DRAWN: SRY APPROVED: CRS
SCALE: AS SHOWN
DATE: 3/1/13

STATE OF ALASKA — Charles R. Somerville — CE-8845 — REGISTERED PROFESSIONAL ENGINEER

HAINES BOROUGH
PORT CHILKOOT DOCK RENOVATION

SHEET TITLE: CRUISE SHIP APPROACH DOCK DEMOLITION PLAN

PND PROJECT NO.: 112048.08 DWG. FILE: 1.15.DWG

P1.15

SHEET 15 OF 62

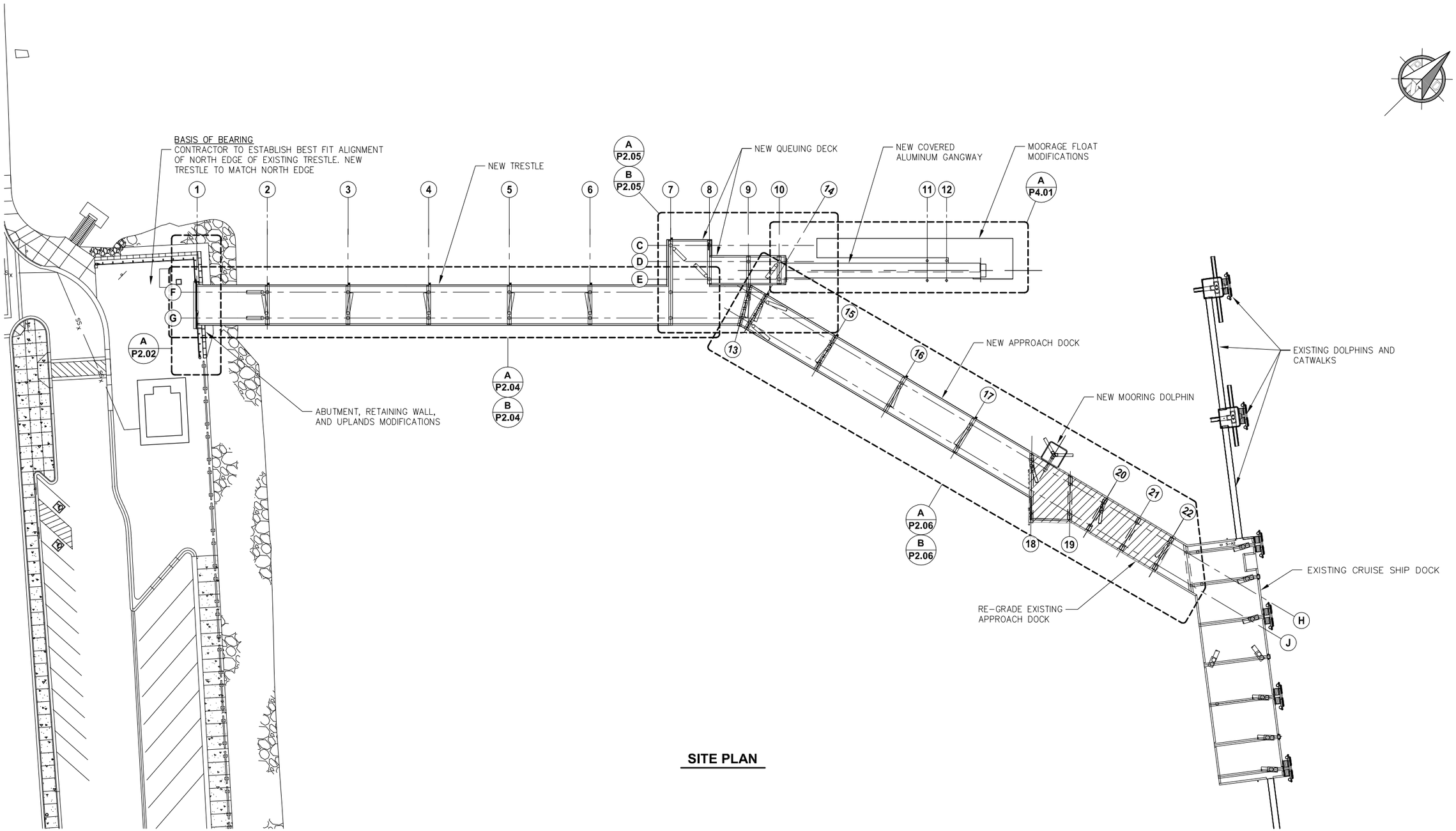

SITE PLAN

HAINES BOROUGH ALASKA

REVISIONS

REV.	DATE	DESCRIPTION	DWN.	CKD.	APP.

PND ENGINEERS, INC.
9360 Glacier Highway Ste 100
Juneau, Alaska 99801
Phone: 907-586-2093
Fax: 907-586-2099
www.pndengineers.com

DESIGN: SRY CHECKED: CRS
DRAWN: SRY APPROVED: CRS

SCALE: SCALE IN FEET
0 30 60 FT.

STATE OF ALASKA
24 OTH
Charles R. Somerville
CE-8845
REGISTERED PROFESSIONAL ENGINEER
DATE: 3/1/13

HAINES BOROUGH
PORT CHILKOOT DOCK RENOVATION

SHEET TITLE:
SITE PLAN

PND PROJECT NO.: 112048.08 DWG. FILE: 2.01.DWG

P2.01
SHEET 16 OF 62

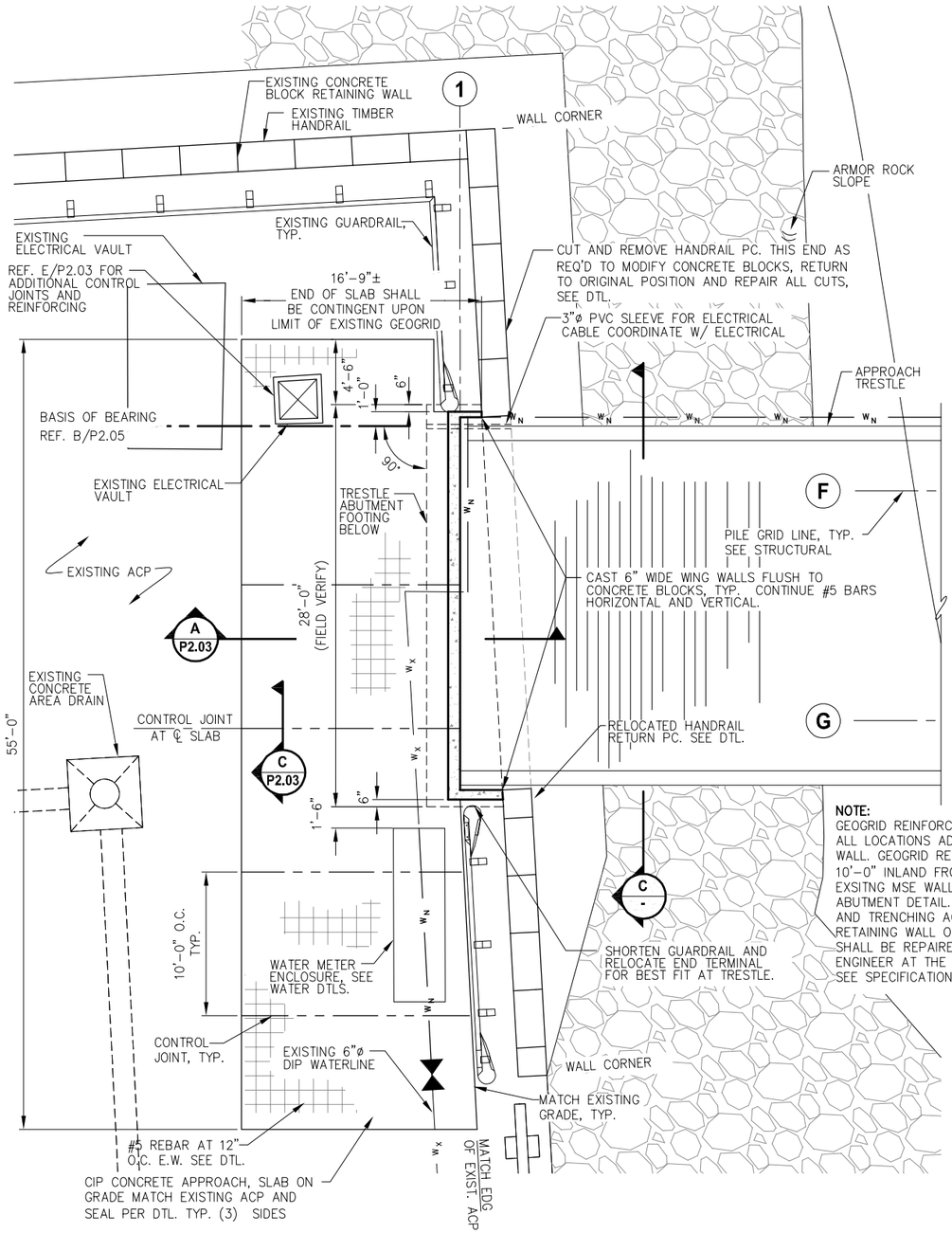

NOTE:
GEOGRID REINFORCMENT EXISTS BELOW GRADE AT ALL LOCATIONS ADJACENT TO THE MSE RETAINING WALL. GEOGRID REINFORCEMENT EXTENDS APPROX. 10'-0" INLAND FROM THE LANDWARD EDGE OF THE EXSITNG MSE WALL CONCRETE BLOCKS, SEE ABUTMENT DETAIL. TAKE CARE DURING EXCAVATION AND TRENCHING ACTIVITIES. DAMAGES TO THE MSE RETAINING WALL OR GEOGRID REINFORCEMENT SHALL BE REPAIRED TO THE SATISFACTION OF THE ENGINEER AT THE EXPENSE OF THE CONTRACTOR, SEE SPECIFICATIONS.

A P2.01 RETAINING WALL AND ABUTMENT RECONFIGURATION - PLAN

SCALE IN FEET

0 5 10

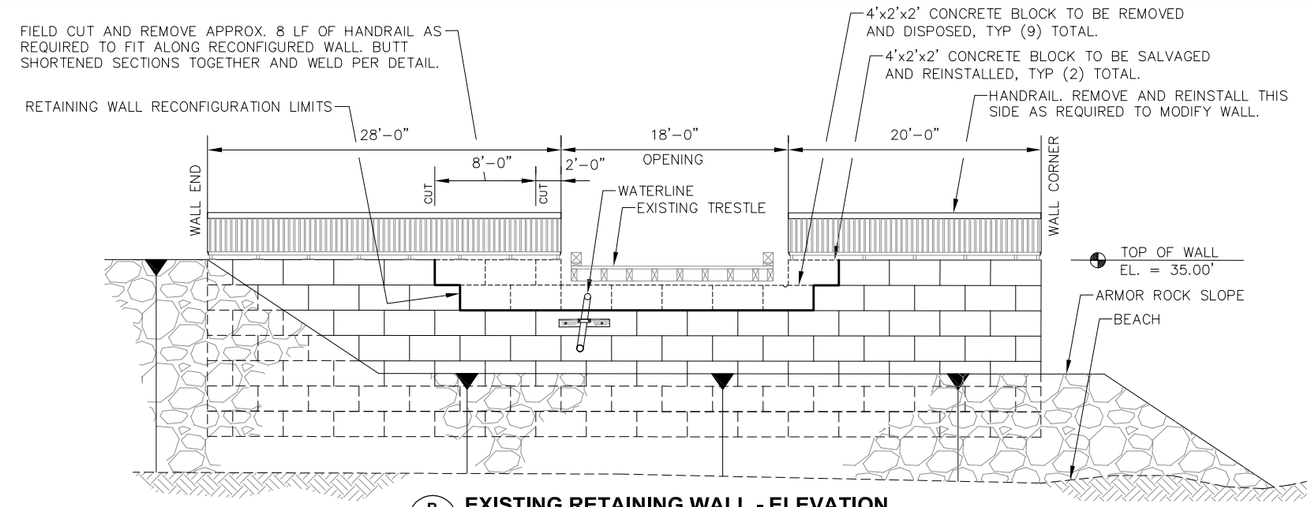

B P1.14 EXISTING RETAINING WALL - ELEVATION

NOTE: APPROACH TRESTLE NOT SHOWN THIS VIEW.

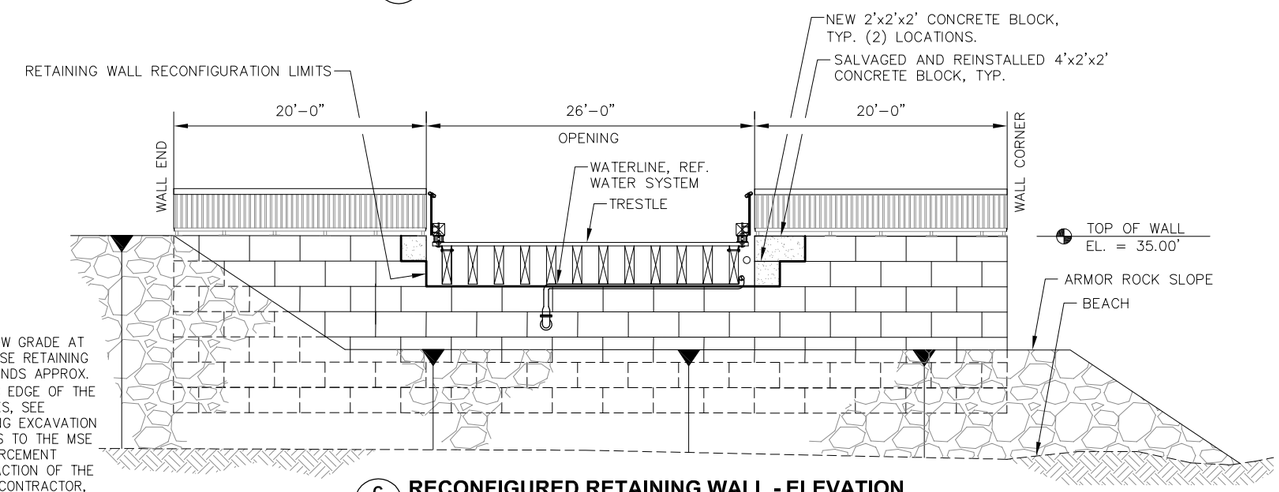

C - RECONFIGURED RETAINING WALL - ELEVATION

NOTE: APPROACH TRESTLE NOT SHOWN THIS VIEW.

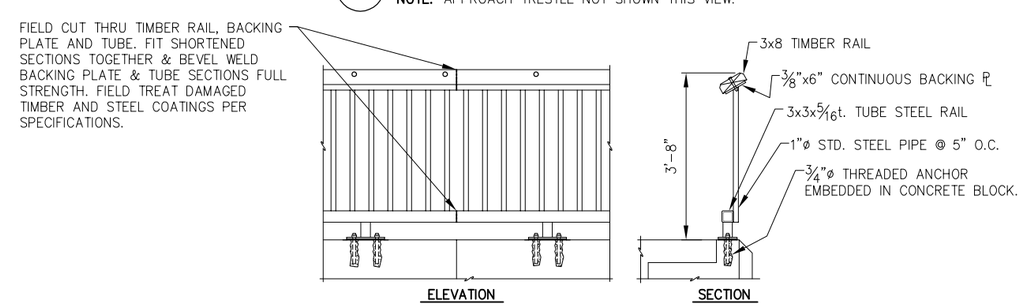

HANDRAIL MODIFICATIONS

REVISIONS

REV.	DATE	DESCRIPTION	DWN.	CKD.	APP.

PND ENGINEERS, INC.
9360 Glacier Highway Ste 100
Juneau, Alaska 99801
Phone: 907-586-2093
Fax: 907-586-2099
www.pndengineers.com

DESIGN: SRY CHECKED: CRS
DRAWN: SRY APPROVED: CRS
SCALE: AS SHOWN

STATE OF ALASKA — Charles R. Somerville — CE-8845 — REGISTERED PROFESSIONAL ENGINEER
DATE: 3/1/13

HAINES BOROUGH
PORT CHILKOOT DOCK RENOVATION

SHEET TITLE:
ABUTMENT PLAN AND RETAINING WALL ELAVATIONS

PND PROJECT NO.: 112048.08 DWG. FILE: 2.02.DWG

P2.02
SHEET 17 OF 62

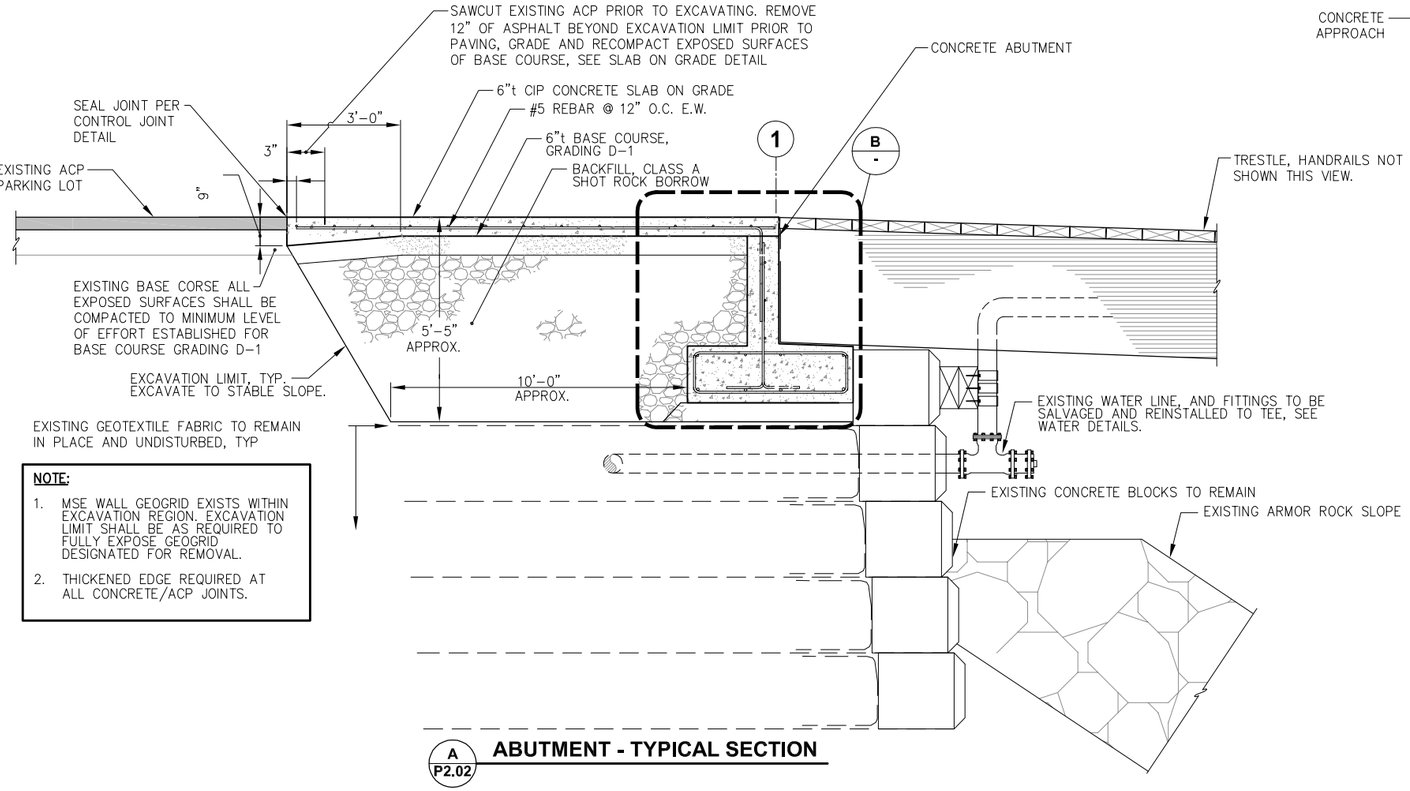

NOTE:

1. MSE WALL GEOGRID EXISTS WITHIN EXCAVATION REGION. EXCAVATION LIMIT SHALL BE AS REQUIRED TO FULLY EXPOSE GEOGRID DESIGNATED FOR REMOVAL.
2. THICKENED EDGE REQUIRED AT ALL CONCRETE/ACP JOINTS.

A P2.02 ABUTMENT - TYPICAL SECTION

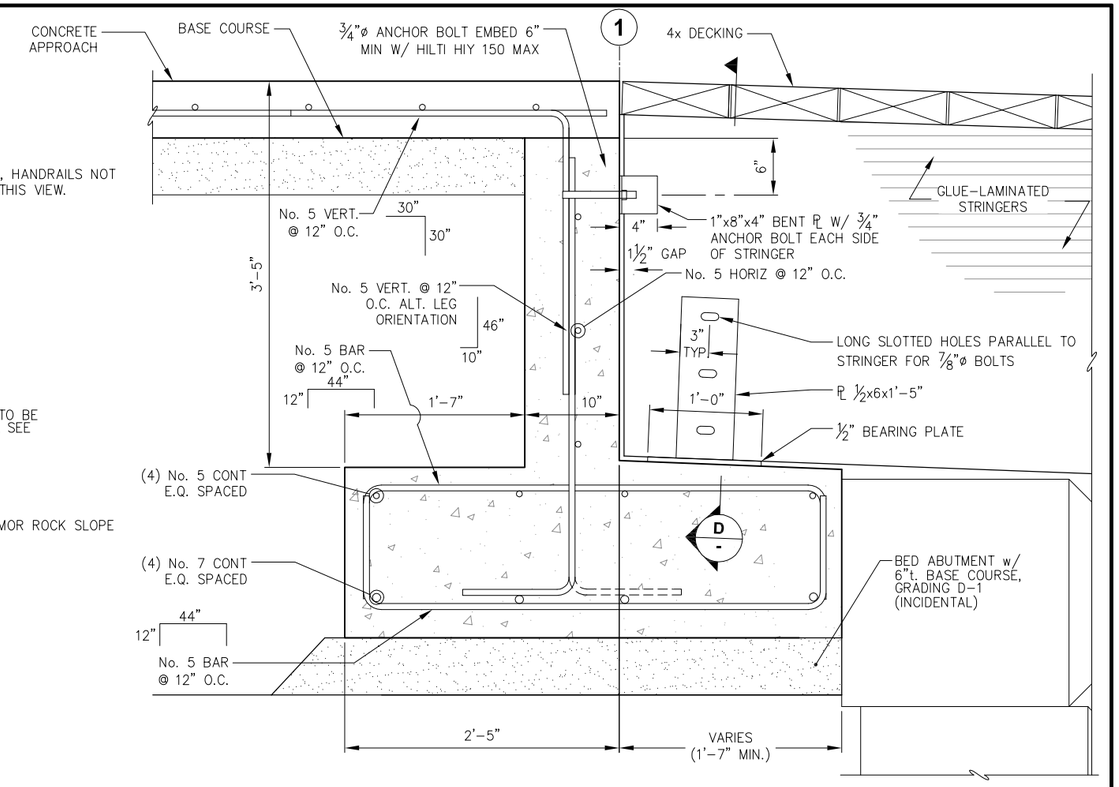

B - ABUTMENT - TYPICAL SECTION

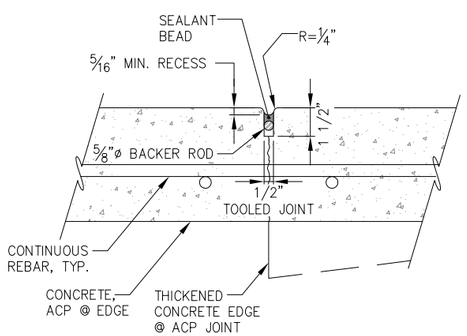

NOTE:

1. ALL JOINTS SHALL BE TOOLED AS SHOWN.
2. SEALANT SHALL BE CRAFCO ROADSAVER NS SILICONE OR APPROVED EQUAL.
3. SEALANT BEAD SHALL BE ¼"t. +/- 25%.
4. CONCRETE CONTROL JOINT SHOWN, ACP/CONC. JOINT SHALL BE SIMILAR EXCEPT AS NOTED.
5. JOINT DETAIL SHALL BE PER MFR'S WRITTEN INSTRUCTIONS.

C P2.02 CONTROL JOINT AND EDGE DETAIL

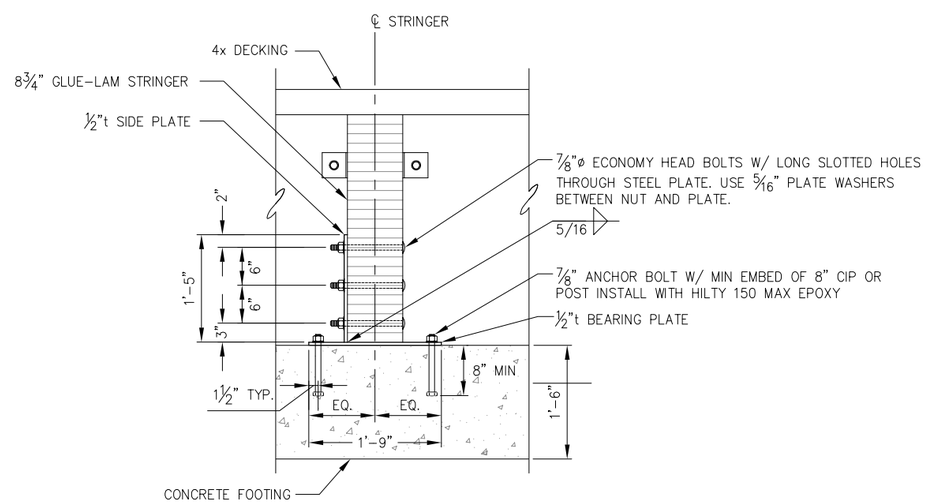

D - STRINGER BEARING PLATE DETAIL

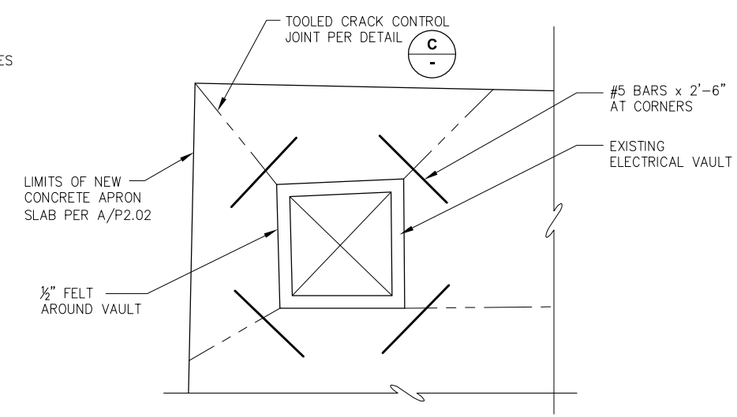

E - APRON SLAB PENETRATION

REVISIONS

REV.	DATE	DESCRIPTION	DWN.	CKD.	APP.

PND ENGINEERS, INC.
9360 Glacier Highway Ste 100
Juneau, Alaska 99801
Phone: 907-586-2093
Fax: 907-586-2099
www.pndengineers.com

DESIGN: SRY CHECKED: CRS
DRAWN: SRY APPROVED: CRS
SCALE: NTS
DATE: 3/1/13

STATE OF ALASKA — Charles R. Somerville — CE-8845 — REGISTERED PROFESSIONAL ENGINEER

HAINES BOROUGH
PORT CHILKOOT DOCK RENOVATION

SHEET TITLE: ABUTMENT SECTION & UPLAND DETAILS

PND PROJECT NO.: 112048.08 DWG. FILE: 2.03.DWG

P2.03
SHEET 18 OF 62

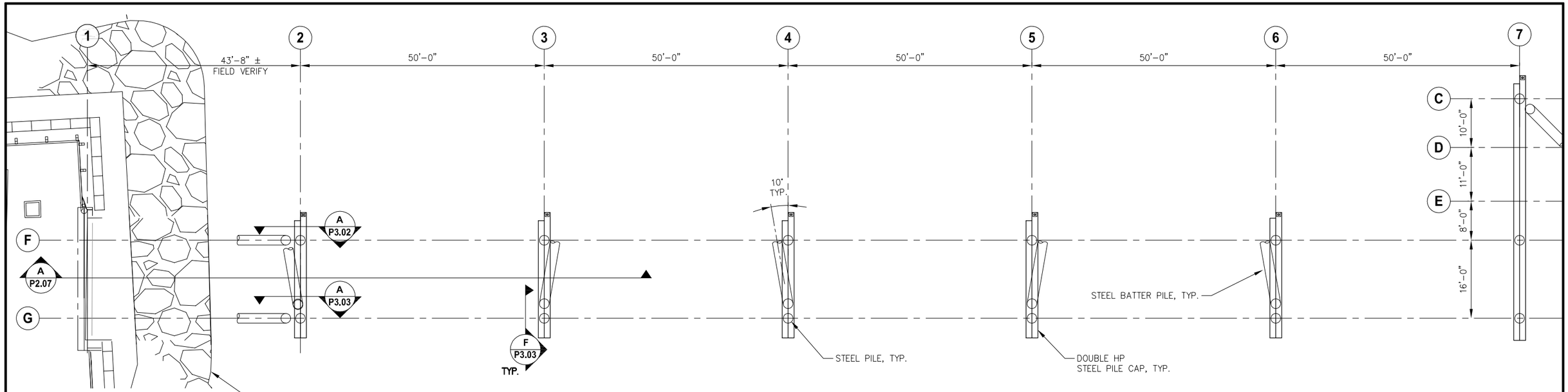

A P2.01 **TRESTLE FOUNDATION PLAN**

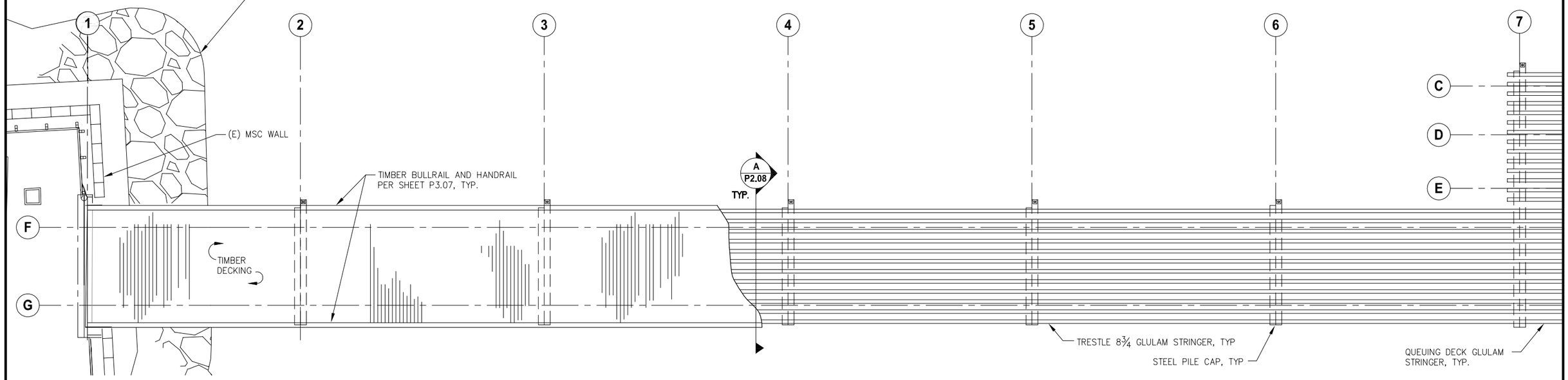

B P2.01 **TRESTLE FRAMING PLAN**

HAINES BOROUGH ALASKA

REVISIONS

REV.	DATE	DESCRIPTION	DWN.	CKD.	APP.

PND ENGINEERS, INC.
9360 Glacier Highway Ste 100
Juneau, Alaska 99801
Phone: 907-586-2093
Fax: 907-586-2099
www.pndengineers.com

DESIGN: SRY CHECKED: CRS
DRAWN: SRY APPROVED: CRS

SCALE: SCALE IN FEET
0 10 20 FT.

STATE OF ALASKA
Charles R. Somerville
CE-8845
REGISTERED PROFESSIONAL ENGINEER
DATE: 3/1/13

HAINES BOROUGH
PORT CHILKOOT DOCK RENOVATION

SHEET TITLE:
TRESTLE FOUNDATION AND FRAMING PLANS

PND PROJECT NO.: 112048.08 DWG. FILE: 2.01.DWG

P2.04

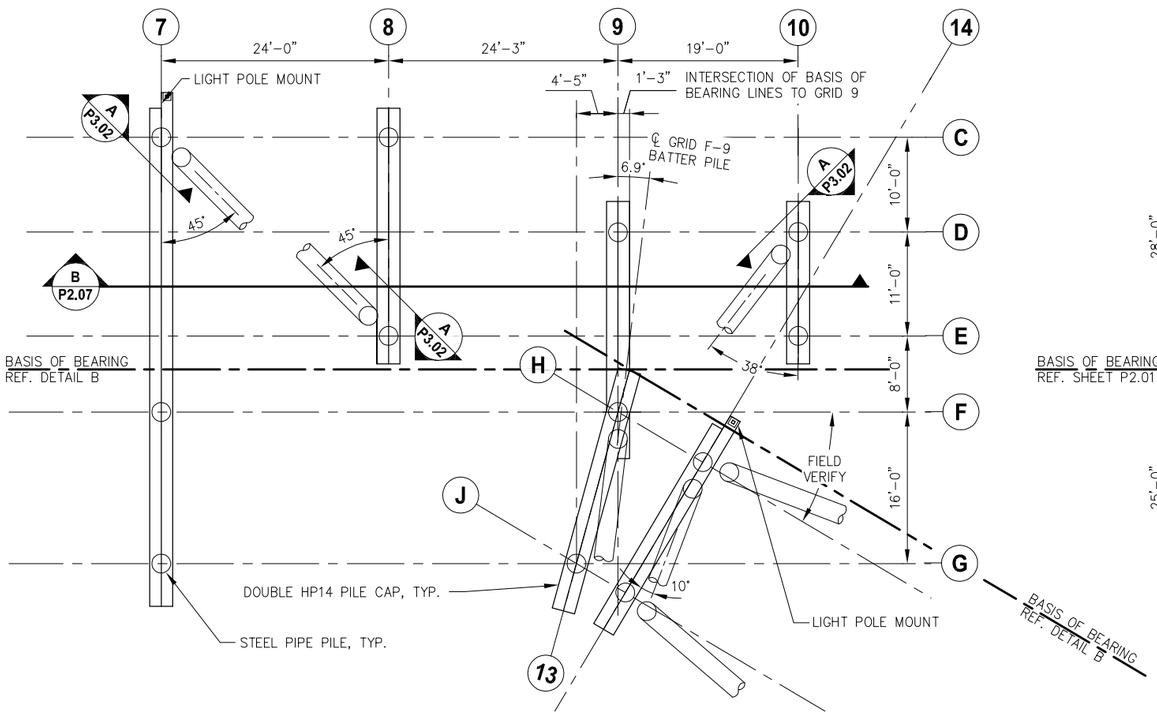

A P2.01 **GANGWAY QUEUING DECK FOUNDATION PLAN**

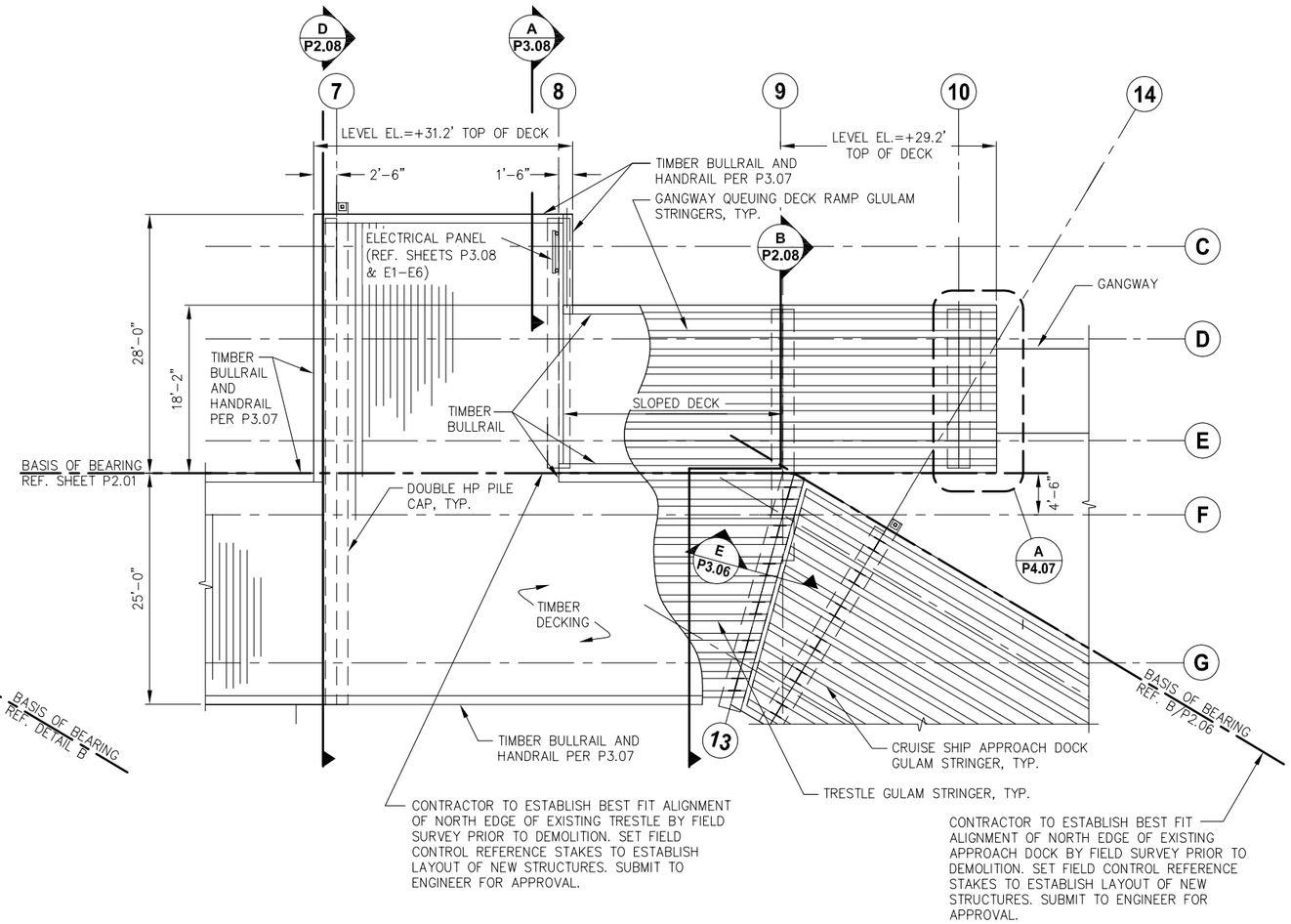

B P2.01 **GANGWAY QUEUING DECK FRAMING PLAN**

HAINES BOROUGH ALASKA

REVISIONS

REV.	DATE	DESCRIPTION	DWN.	CKD.	APP.

PND ENGINEERS, INC.
9360 Glacier Highway Ste 100
Juneau, Alaska 99801
Phone: 907-586-2093
Fax: 907-586-2099
www.pndengineers.com

DESIGN: SRY CHECKED: CRS
DRAWN: SRY APPROVED: CRS
SCALE: SCALE IN FEET 0 8 16 FT.

STATE OF ALASKA 24010 Charles R. Somerville CE-8845 REGISTERED PROFESSIONAL ENGINEER
DATE: 3/1/13

HAINES BOROUGH
PORT CHILKOOT DOCK RENOVATION

SHEET TITLE:
GANGWAY QUEUING AREA FOUNDATION AND FRAMING PLANS

PND PROJECT NO.: 112048.08 DWG. FILE: 2.01.DWG

P2.05

SHEET 20 OF 62

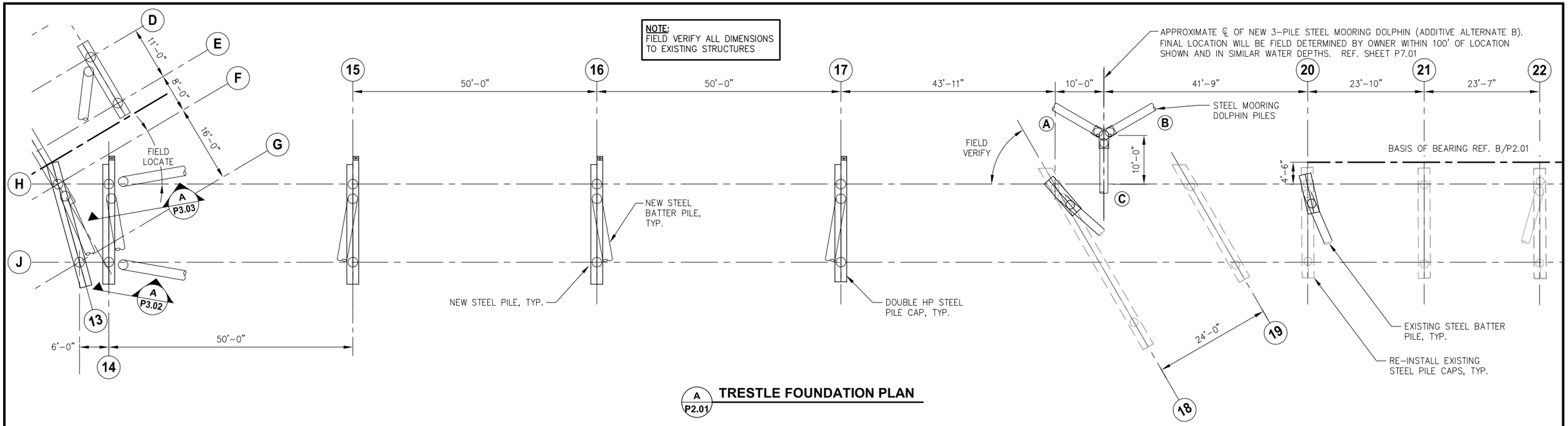

A P2.01 **TRESTLE FOUNDATION PLAN**

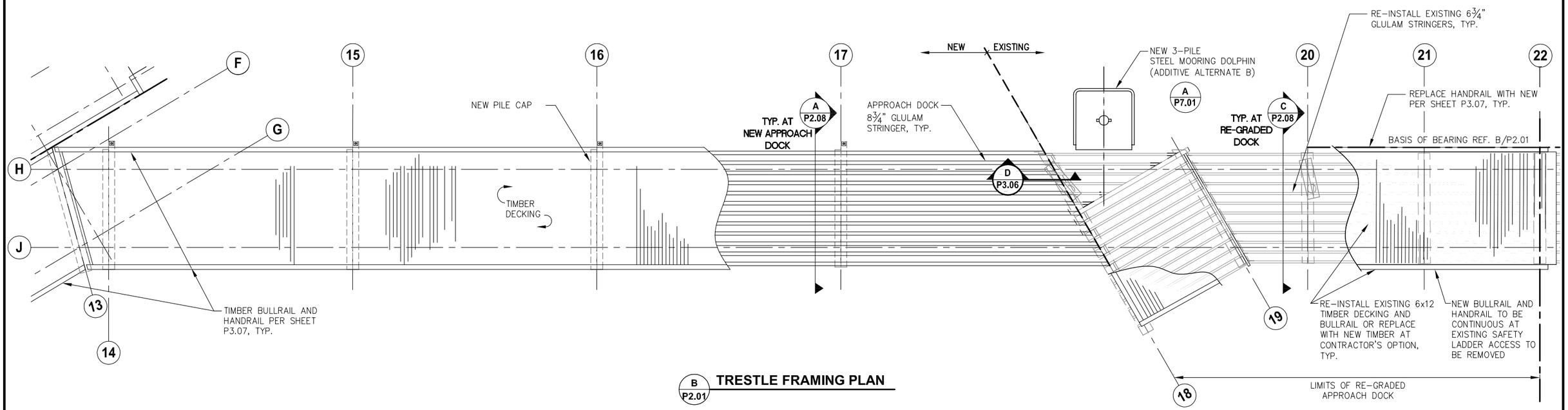

B P2.01 **TRESTLE FRAMING PLAN**

HAINES BOROUGH ALASKA

REVISIONS

REV.	DATE	DESCRIPTION	DWN.	CKD.	APP.

PND ENGINEERS, INC.
9360 Glacier Highway Ste 100
Juneau, Alaska 99801
Phone: 907-586-2093
Fax: 907-586-2099
www.pndengineers.com

DESIGN: SRY CHECKED: CRS
DRAWN: SRY APPROVED: CRS

SCALE: SCALE IN FEET 0 10 20 FT.

STATE OF ALASKA — Charles R. Somerville — CE-8845 — REGISTERED PROFESSIONAL ENGINEER

DATE: 3/1/13

HAINES BOROUGH
PORT CHILKOOT DOCK RENOVATION

SHEET TITLE:
CRUISE SHIP APPROACH DOCK FOUNDATION AND FRAMING PLANS

PND PROJECT NO.: 112048.08 DWG. FILE: 2.01.DWG

P2.06
SHEET 21 OF 62

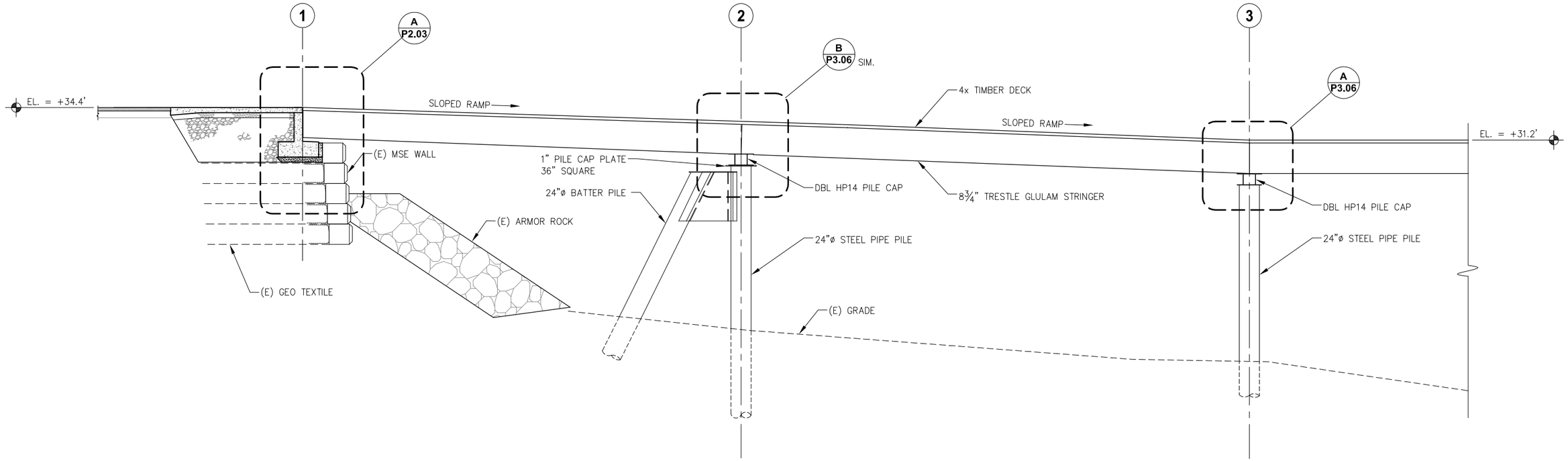

A P2.04 **RAMP ELEVATION AT TRESTLE ABUTMENT**

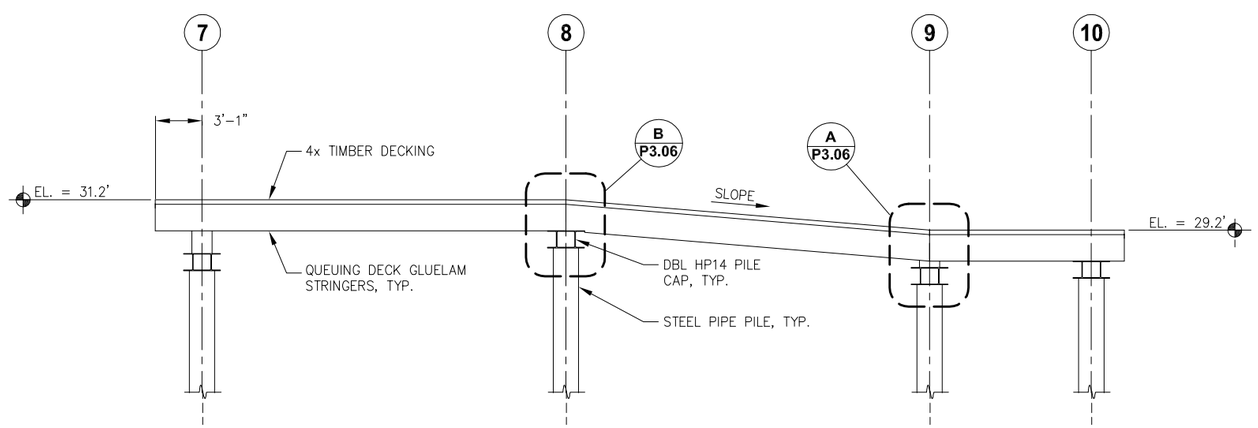

B P2.05 **QUEUING DECK GANGWAY RAMP CONNECTION TO SECTION**

REVISIONS

REV.	DATE	DESCRIPTION	DWN.	CKD.	APP.

P N D ENGINEERS, INC.
9360 Glacier Highway Ste 100
Juneau, Alaska 99801
Phone: 907-586-2093
Fax: 907-586-2099
www.pndengineers.com

DESIGN: SRY CHECKED: CRS
DRAWN: SRY APPROVED: CRS
SCALE: SCALE IN FEET 0 4 8 FT.

STATE OF ALASKA 24010 Charles R. Somerville CE-8845 REGISTERED PROFESSIONAL ENGINEER
DATE: 3/1/13

HAINES BOROUGH
PORT CHILKOOT DOCK RENOVATION

SHEET TITLE:
RAMP ELEVATIONS AND TRESTLE SECTION

PND PROJECT NO.: 112048.08 DWG. FILE: 2.01.DWG

P2.07
SHEET 22 OF 62

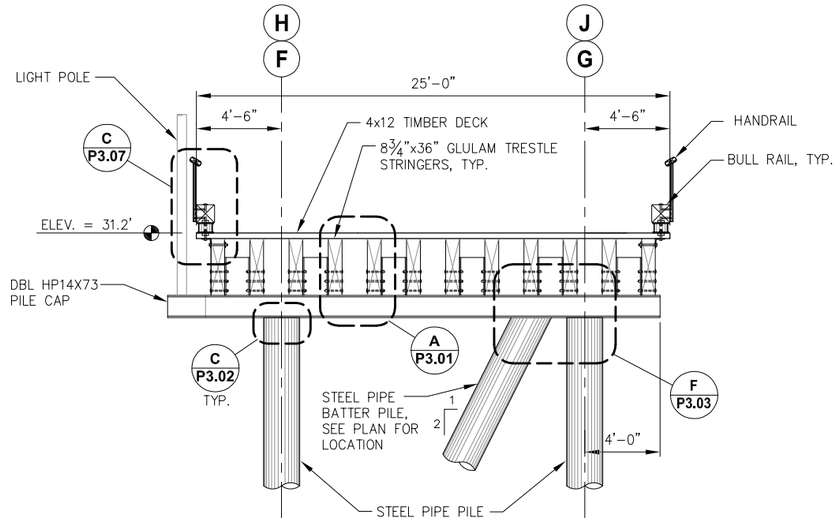

A - TYPICAL TRESTLE AND APPROACH DOCK SECTION

NOTE: REF. PILE CAP DETAIL SHEETS P3.01, P3.03, AND P3.04 FOR STRINGER SPACING AND CONNECTION DETAILS

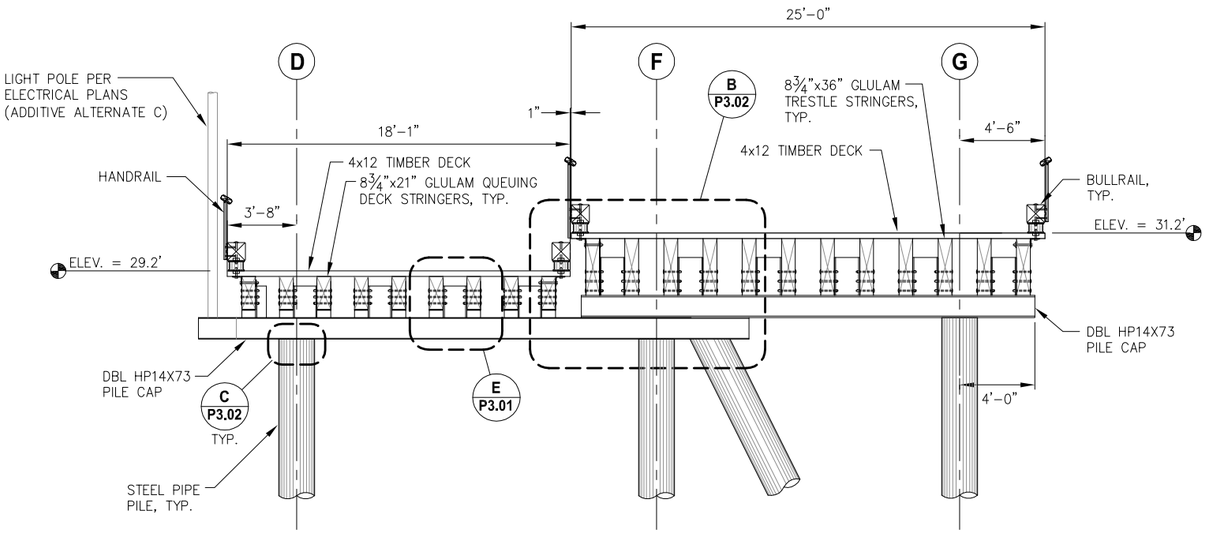

B P2.05 GANGWAY QUEUING DECK AND TRESTLE SECTION AT GRIDS 9 & 13

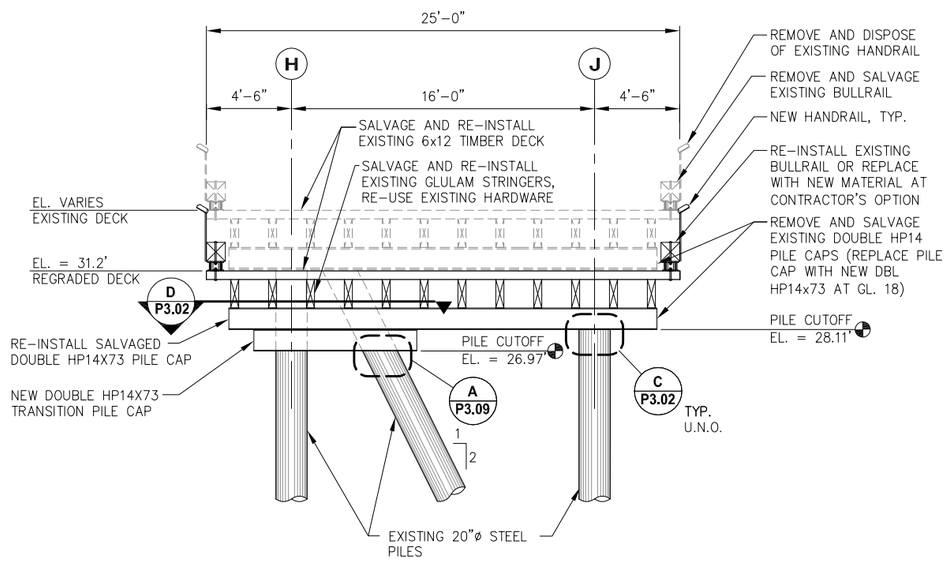

C - TYPICAL RE-GADED APPROACH DOCK SECTION

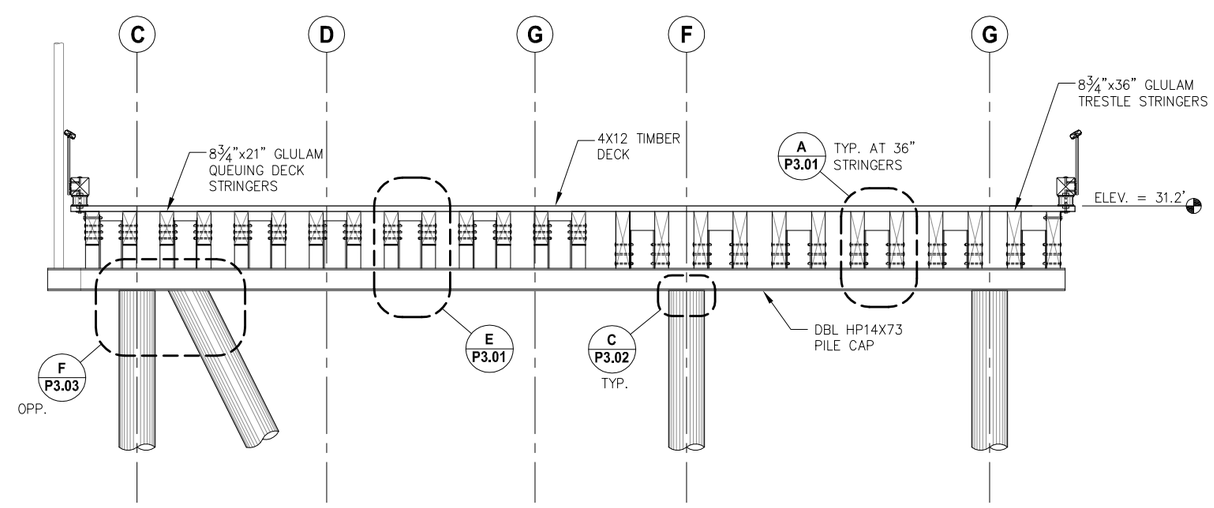

D P2.05 QUEUING DECK AND TRESTLE SECTION AT GRID 7

HAINES BOROUGH ALASKA

REVISIONS

REV.	DATE	DESCRIPTION	DWN.	CKD.	APP.

PND ENGINEERS, INC.
9360 Glacier Highway Ste 100
Juneau, Alaska 99801
Phone: 907-586-2093
Fax: 907-586-2099
www.pndengineers.com

DESIGN: SRY CHECKED: CRS
DRAWN: SRY APPROVED: CRS
SCALE: SCALE IN FEET 0 40 80 FT.

STATE OF ALASKA 49TH Charles R. Somerville CE-8845 REGISTERED PROFESSIONAL ENGINEER
DATE: 3/1/13

HAINES BOROUGH
PORT CHILKOOT DOCK RENOVATION

SHEET TITLE: FRAMING SECTIONS

PND PROJECT NO.: 112048.08 DWG. FILE: 2.01.DWG

P2.08

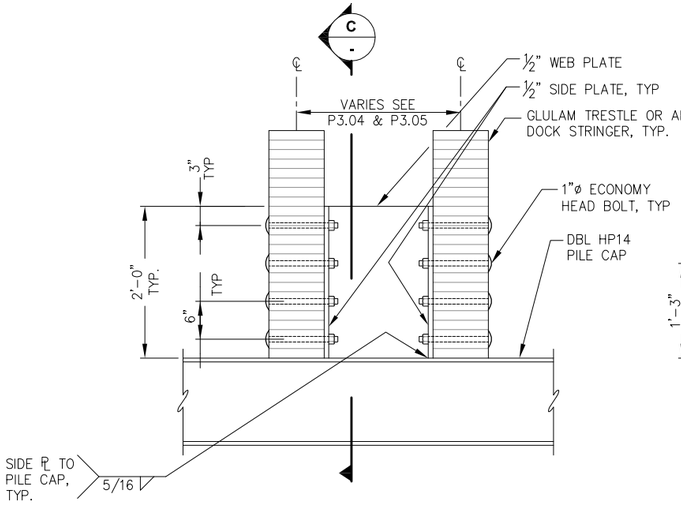

A - TYPICAL 36" DEEP STRINGER CONNECTION ELEVATION

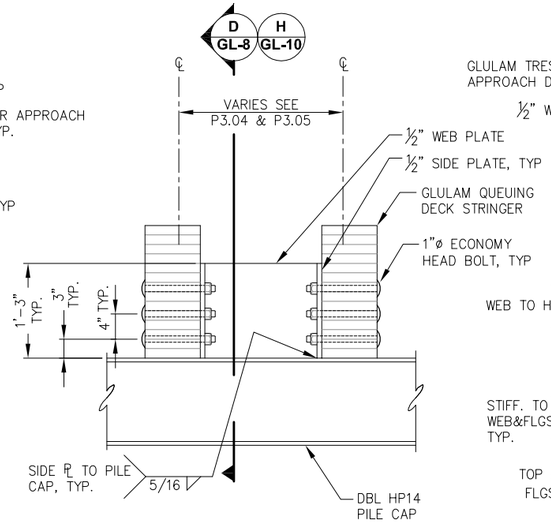

B - TYPICAL STRINGER CONNECTION AT GRID LINES 8 AND 10

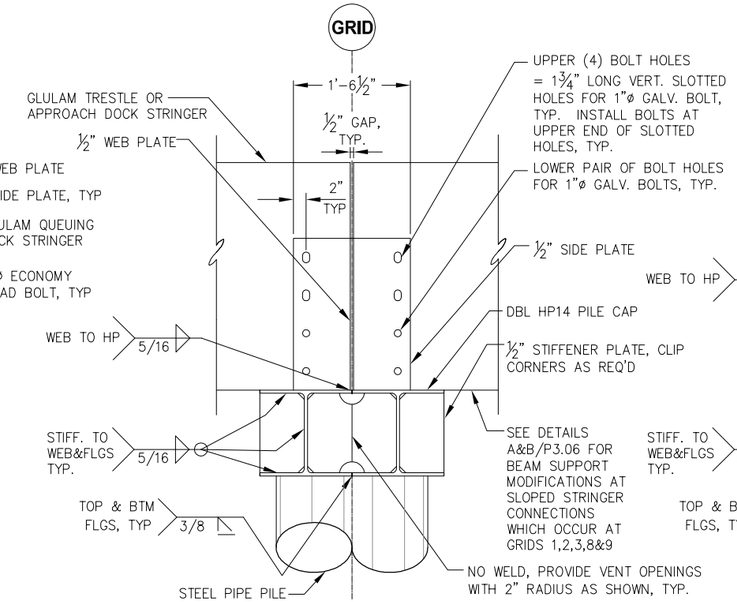

C - SECTION AT TYPICAL 36" DEEP STRINGER CONNECTION

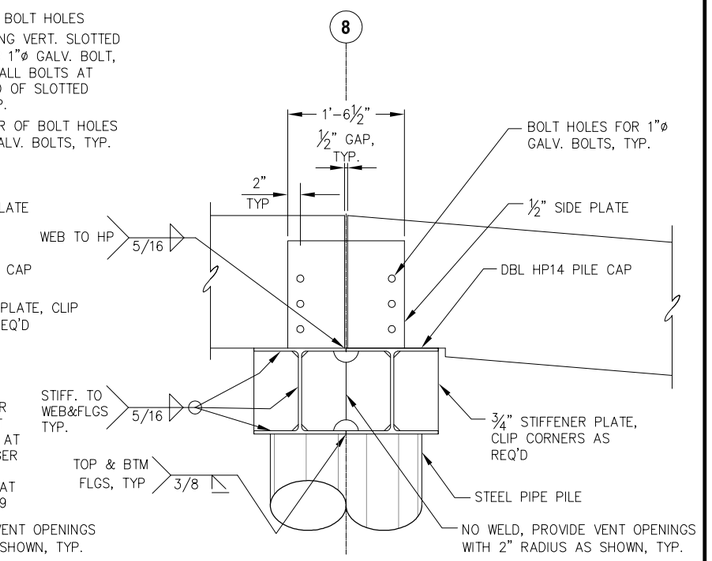

D - SECTION AT GRID 8 STRINGER CONNECTION

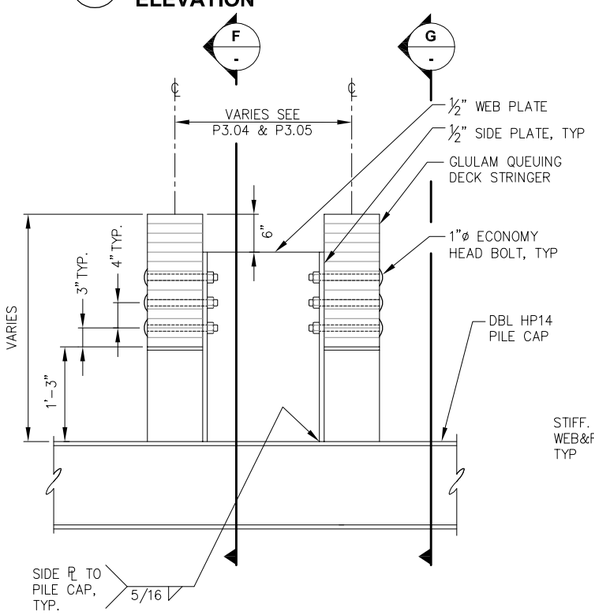

E - RAISED STRINGER CONNECTION SECTION

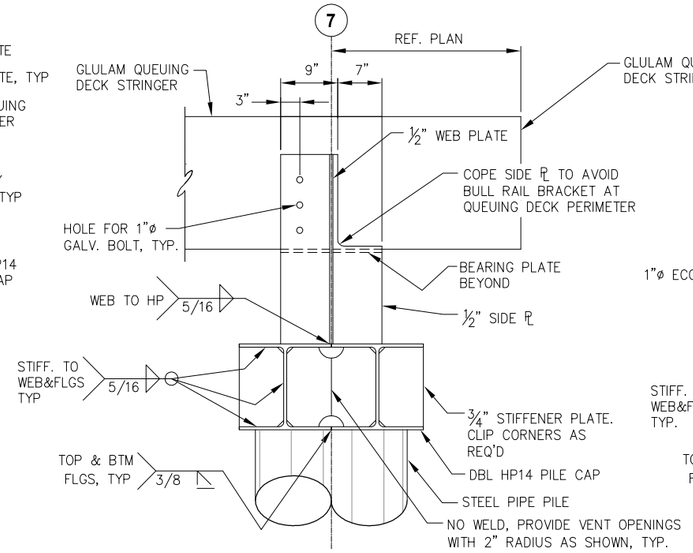

F - SECTION AT RAISED STRINGER CONNECTION WEB

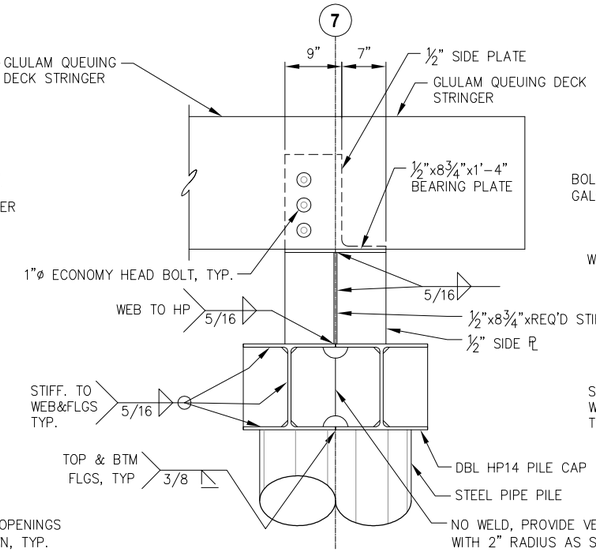

G - SECTION AT RAISED STRINGER CONNECTION

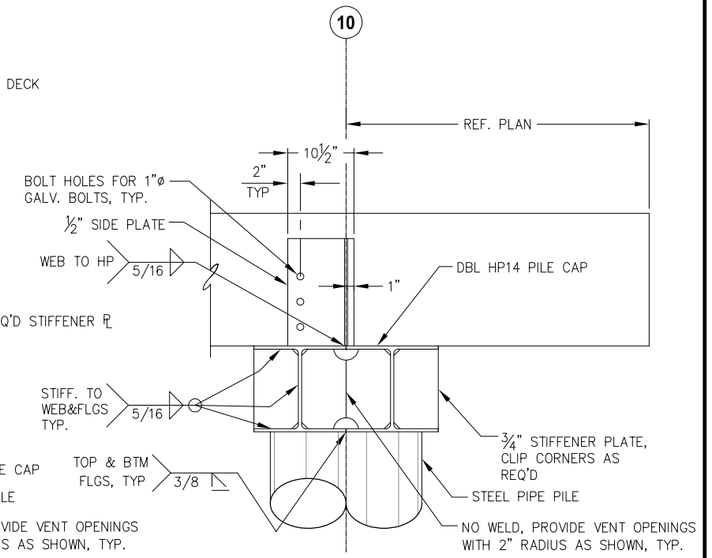

H - SECTION AT GRID 10 STRINGER CONNECTION

HAINES BOROUGH ALASKA

REVISIONS

REV.	DATE	DESCRIPTION	DWN.	CKD.	APP.

PND ENGINEERS, INC.
9360 Glacier Highway Ste 100
Juneau, Alaska 99801
Phone: 907-586-2093
Fax: 907-586-2099
www.pndengineers.com

DESIGN: MDS CHECKED: CMG
DRAWN: MDS APPROVED: CRS
SCALE: NTS

STATE OF ALASKA — Charles R. Somerville — CE-8845 — REGISTERED PROFESSIONAL ENGINEER
DATE: 3/1/13

HAINES BOROUGH
PORT CHILKOOT DOCK RENOVATION

SHEET TITLE: FRAMING DETAILS

PND PROJECT NO.: 112048.08 DWG. FILE: 3.04.DWG

P3.01
SHEET 24 OF 62

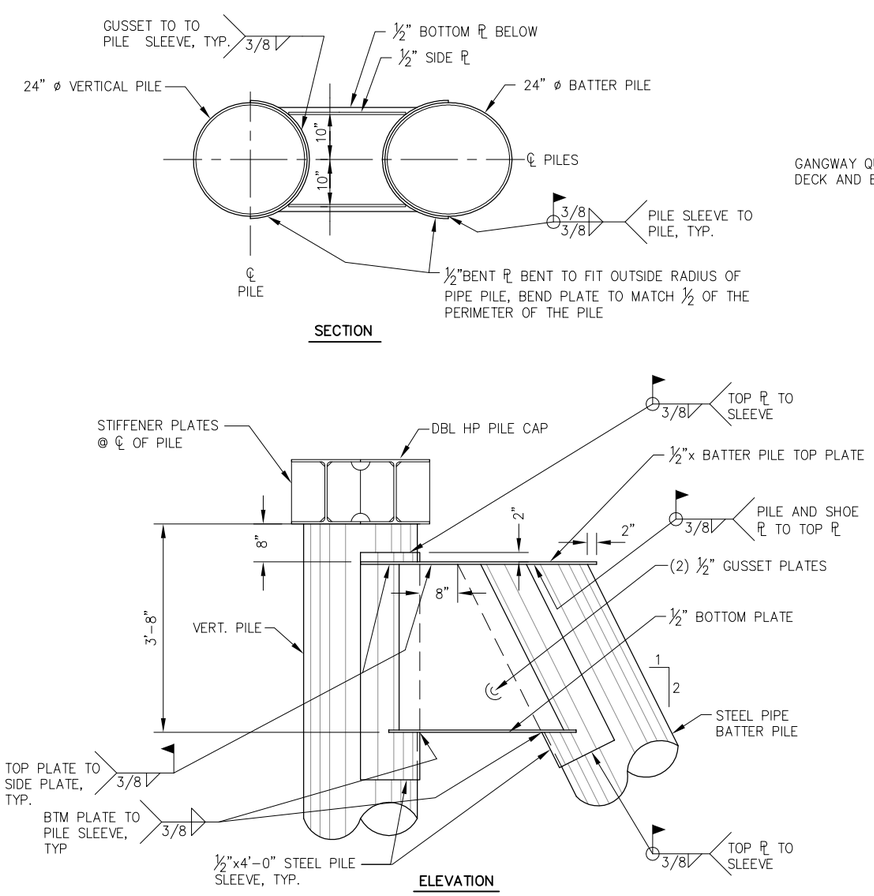

A - SINGLE BATTER PILE CONNECTION WITH GUIDE WEDLMENT

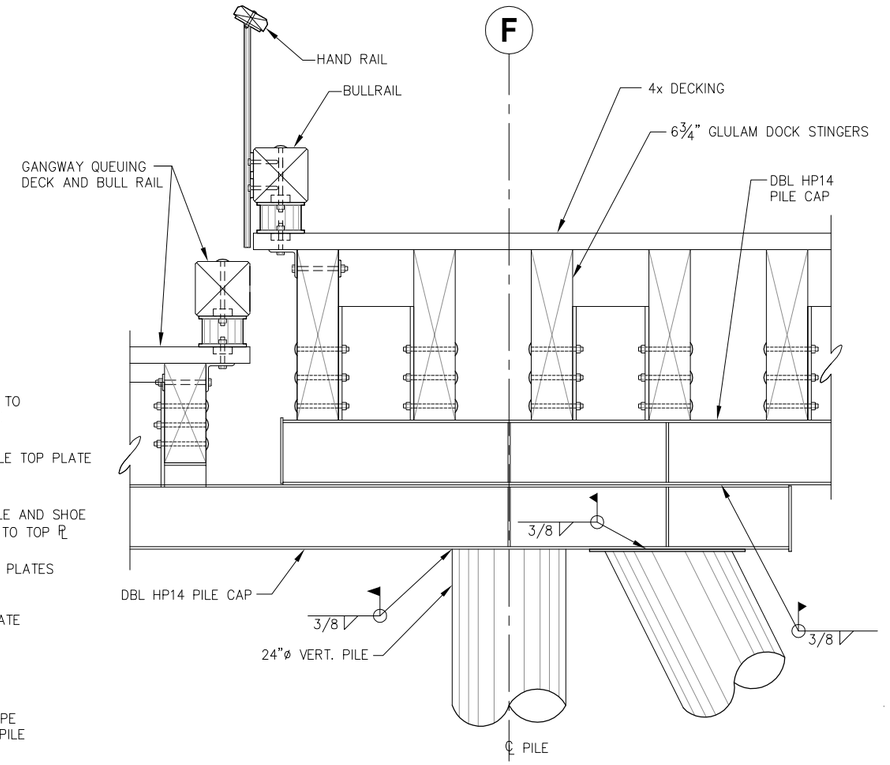

B P2.08 SKEWED PILE CAP ELEVATION AT GRID 9-13

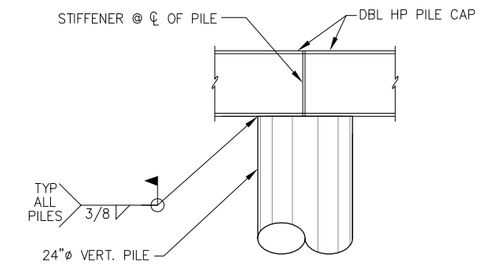

C - TYPICAL 24" DIAMETER VERTICAL PILE CONNECTION TO PILE CAP

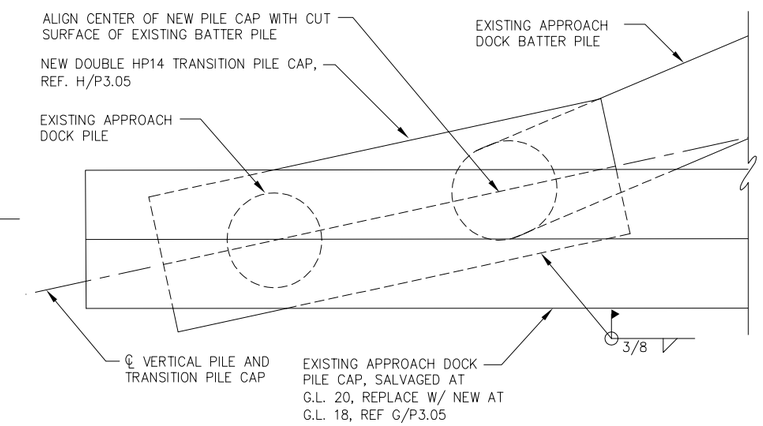

D P2.08 PILE CAP TRANSITION AT RE-GRADED APPROACH DOCK

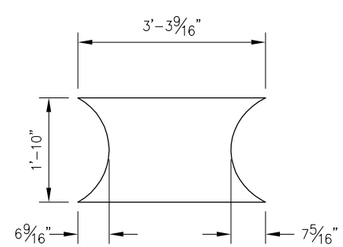

E - TYPICAL BOTTOM PLATE DETAIL FOR SINGLE BATTER PILE CONNECTION

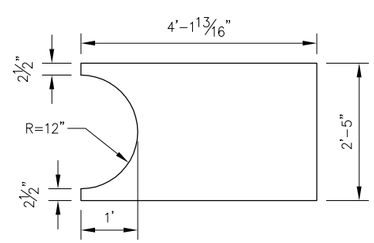

F - TYPICAL TOP PLATE DETAIL FOR SINGLE BATTER PILE CONNECTION

REVISIONS

REV.	DATE	DESCRIPTION	DWN.	CKD.	APP.

P N D ENGINEERS, INC.
9360 Glacier Highway Ste 100
Juneau, Alaska 99801
Phone: 907-586-2093
Fax: 907-586-2099
www.pndengineers.com

DESIGN: SRY CHECKED: CRS
DRAWN: SRY APPROVED: CRS
SCALE: NTS
DATE: 3/1/13

STATE OF ALASKA — Charles R. Somerville — CE-8845 — REGISTERED PROFESSIONAL ENGINEER

HAINES BOROUGH
PORT CHILKOOT DOCK RENOVATION

SHEET TITLE: FRAMING DETAILS

PND PROJECT NO.: 112048.08 DWG. FILE: 3.02.DWG

P3.02
SHEET 25 OF 62

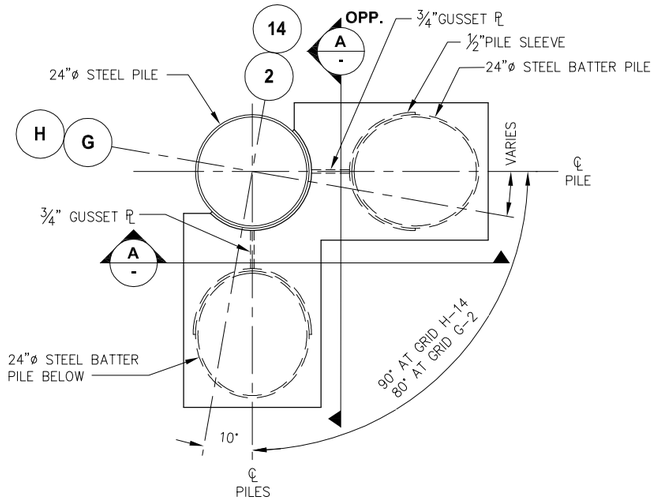

SECTION

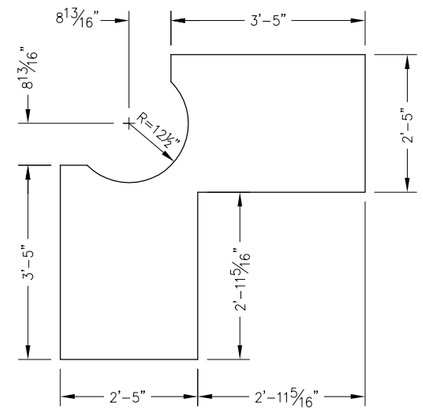

B - TOP PLATE DETAIL FOR GRID H-14 DOUBLE BATTER PILE CONNECTION

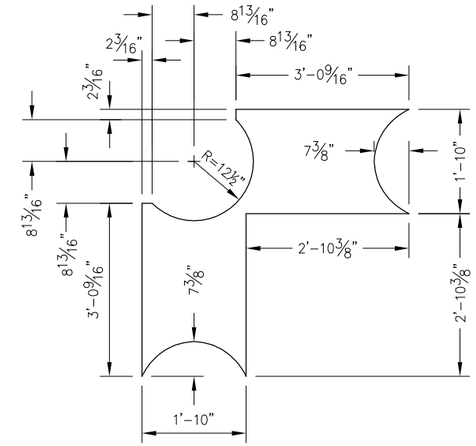

C - BOTTOM PLATE DETAIL FOR GRID H-14 DOUBLE BATTER PILE CONNECTION

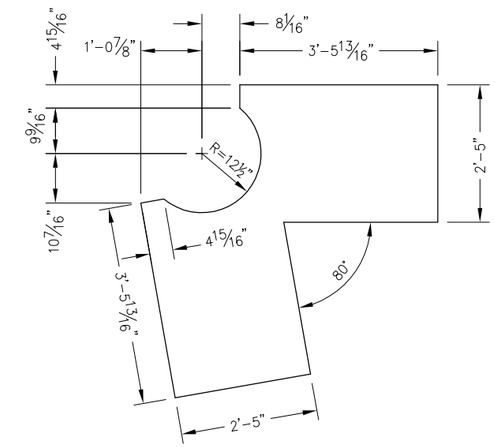

D - TOP PLATE DETAIL FOR GRID G-2 DOUBLE BATTER PILE CONNECTION

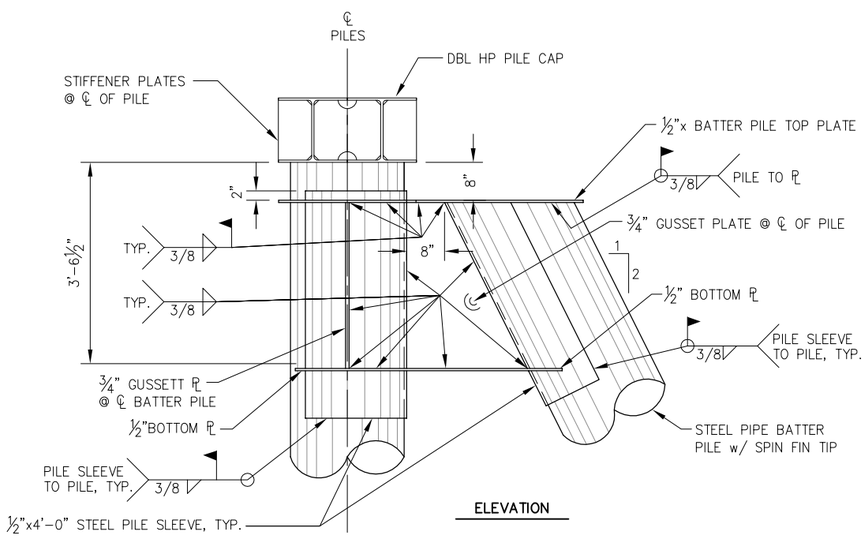

ELEVATION

A - DOUBLE BATTER PILE CONNECTION

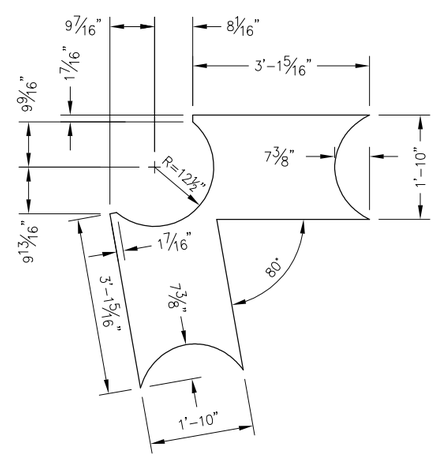

E - BOTTOM PLATE DETAIL FOR GRID G-2 DOUBLE BATTER PILE CONNECTION

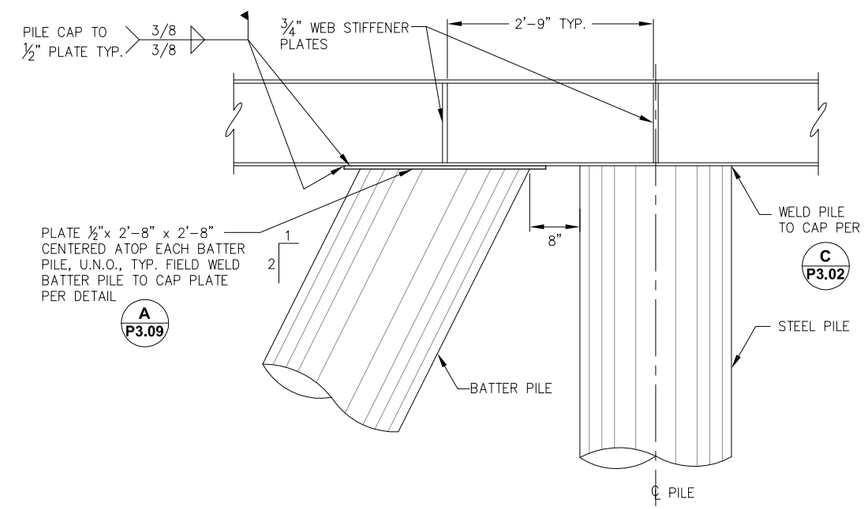

NOTE: STRINGERS AND CONNECTION WELDMENTS NOT SHOWN FOR CLARITY

F - TYPICAL SINGLE BATTER PILE CONNECTION
P2.08

REVISIONS

REV.	DATE	DESCRIPTION	DWN.	CKD.	APP.

PND ENGINEERS, INC.
9360 Glacier Highway Ste 100
Juneau, Alaska 99801
Phone: 907-586-2093
Fax: 907-586-2099
www.pndengineers.com

DESIGN: SRY CHECKED: CRS
DRAWN: SRY APPROVED: CRS
SCALE: NTS
DATE: 3/1/13

STATE OF ALASKA — Charles R. Somerville — CE-8845 — REGISTERED PROFESSIONAL ENGINEER

HAINES BOROUGH
PORT CHILKOOT DOCK RENOVATION

SHEET TITLE: FRAMING DETAILS

P3.03

PND PROJECT NO.: 112048.08 DWG. FILE: 3.03.DWG

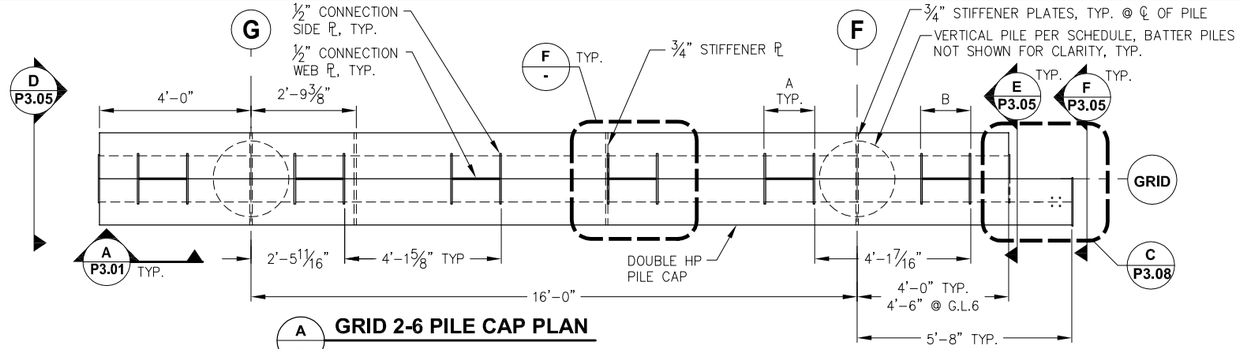

GRID 2-6 PILE CAP PLAN

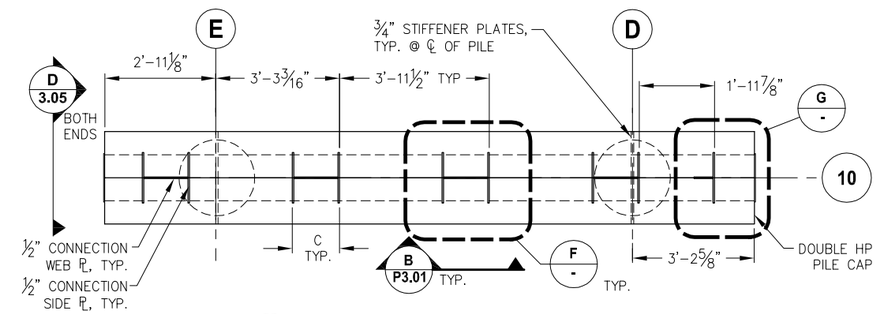

GRID 10 PILE CAP PLAN

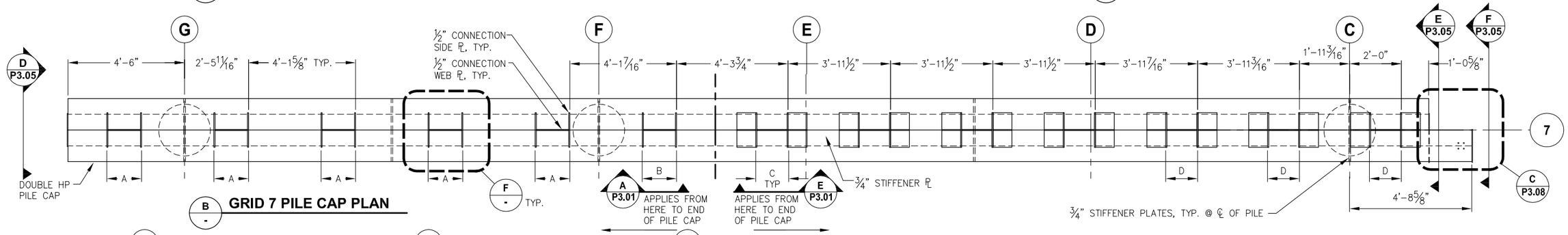

GRID 7 PILE CAP PLAN

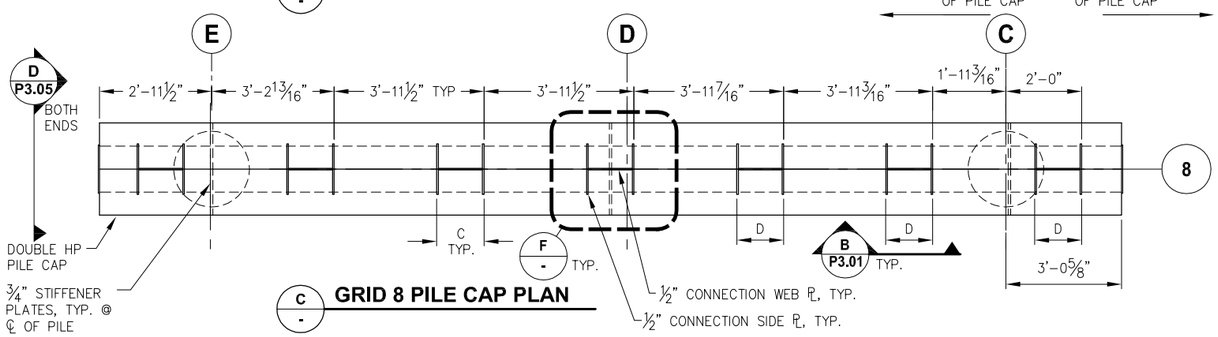

GRID 8 PILE CAP PLAN

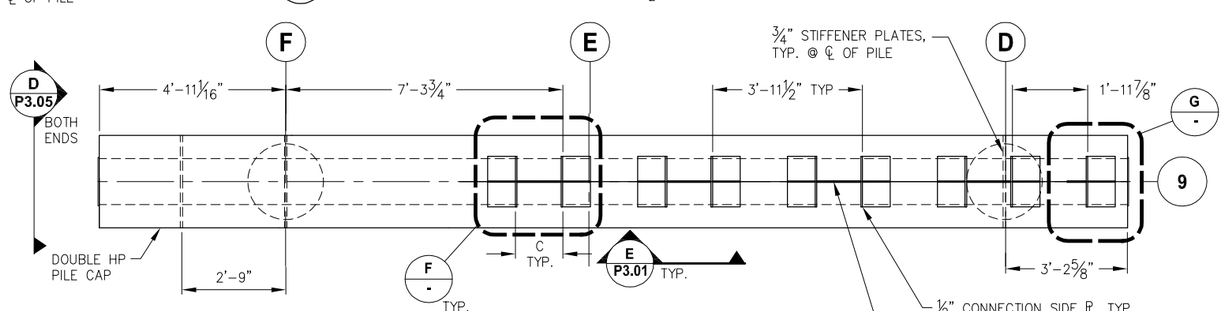

GRID 9 PILE CAP PLAN

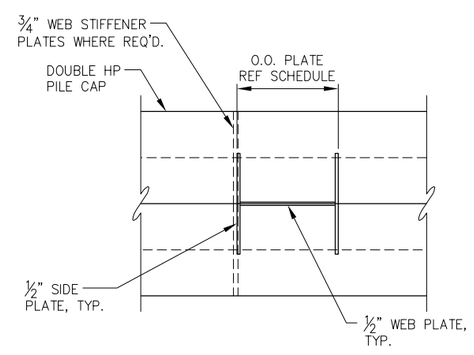

STRINGER CONNECTION PLAN
NTS

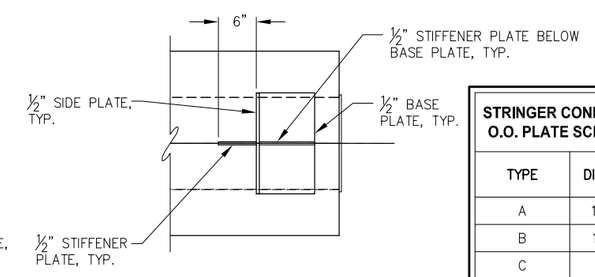

SINGLE SIDED STRINGER CONNECTION PLAN NTS

STRINGER CONNECTION O.O. PLATE SCHEDULE

TYPE	DIMENSION
A	1'-4¹⁄₁₆"
B	1'-3⅞"
C	1'-3"
D	1'-2⅞"

HAINES BOROUGH ALASKA

REVISIONS

REV.	DATE	DESCRIPTION	DWN.	CKD.	APP.

PND ENGINEERS, INC.
9360 Glacier Highway Ste 100
Juneau, Alaska 99801
Phone: 907-586-2093
Fax: 907-586-2099
www.pndengineers.com

DESIGN: SRY CHECKED: CRS
DRAWN: SRY APPROVED: CRS
SCALE: SCALE IN FEET 0 2' 4'

STATE OF ALASKA — Charles R. Somerville — CE-8845 — REGISTERED PROFESSIONAL ENGINEER
DATE: 3/1/13

HAINES BOROUGH
PORT CHILKOOT DOCK RENOVATION

SHEET TITLE: PILE CAP DETAILS

PND PROJECT NO.: 112048.08 DWG. FILE: 3.04.DWG

P3.04
SHEET 27 OF 62

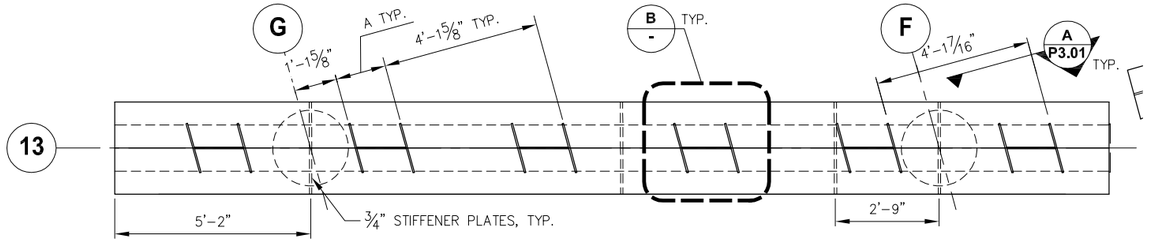

A - GRID 13 PILE CAP PLAN

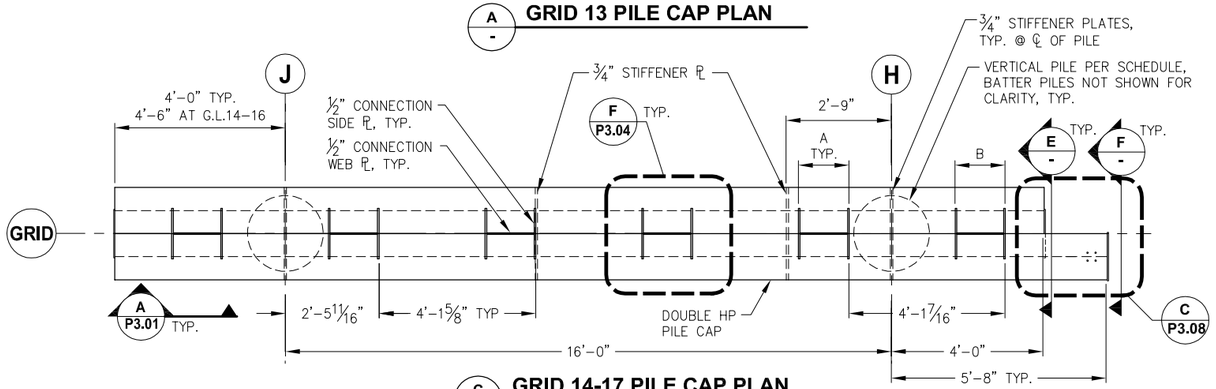

C - GRID 14-17 PILE CAP PLAN

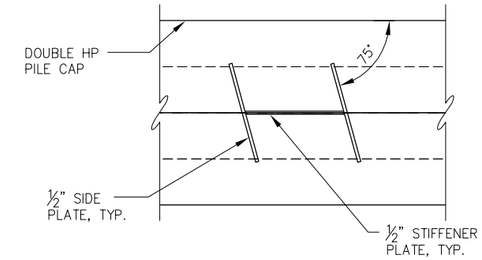

B - STRINGER CONNECTION PLAN
NTS

STRINGER CONNECTION O.O. PLATE SCHEDULE	
TYPE	DIMENSION
A	1'-4 1/16"
B	1'-3 7/8"
C	1'-3"
D	1'-2 7/8"
E	1'-5 1/4"

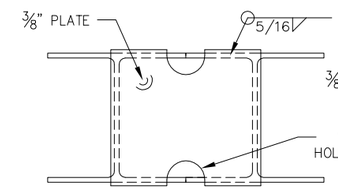

D - PILE CAP COVER PLATE
NTS

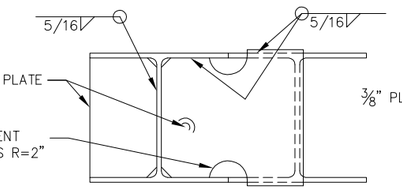

E - PILE CAP COVER PLATE
NTS

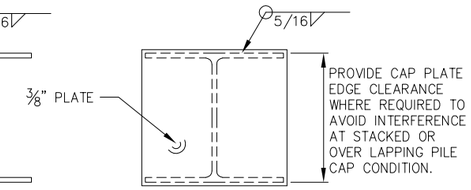

F - PILE CAP COVER PLATE
NTS

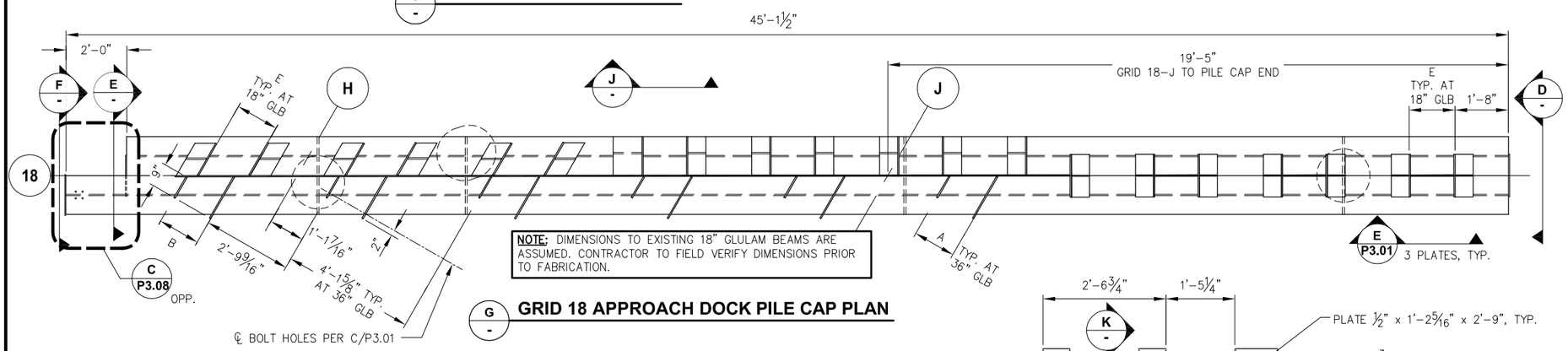

NOTE: DIMENSIONS TO EXISTING 18" GLULAM BEAMS ARE ASSUMED. CONTRACTOR TO FIELD VERIFY DIMENSIONS PRIOR TO FABRICATION.

G - GRID 18 APPROACH DOCK PILE CAP PLAN

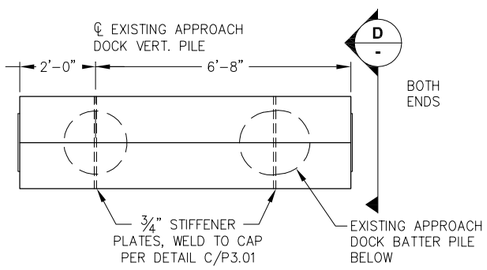

H - APPROACH DOCK TRANSITION PILE CAP

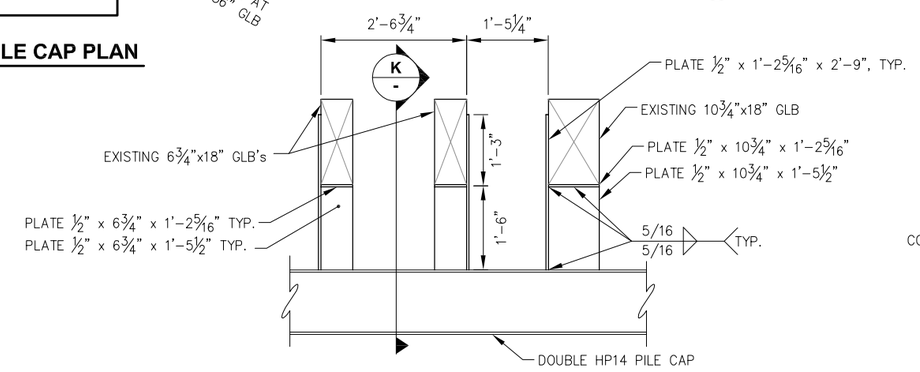

J - GRID 18 PILE CAP WELDMENT

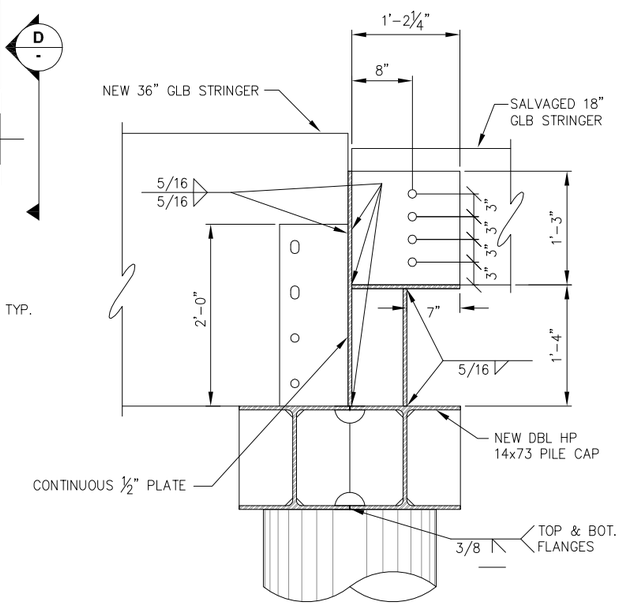

K - GRID 18 PILE CAP WELDMENT

REVISIONS

REV.	DATE	DESCRIPTION	DWN.	CKD.	APP.

PND ENGINEERS, INC.
9360 Glacier Highway Ste 100
Juneau, Alaska 99801
Phone: 907-586-2093
Fax: 907-586-2099
www.pndengineers.com

DESIGN: SRY CHECKED: CRS
DRAWN: SRY APPROVED: CRS
SCALE: SCALE IN FEET 0 2' 4'

STATE OF ALASKA 49TH Charles R. Somerville CE-8845 REGISTERED PROFESSIONAL ENGINEER
DATE: 3/1/13

HAINES BOROUGH
PORT CHILKOOT DOCK RENOVATION

SHEET TITLE: PILE CAP DETAILS

PND PROJECT NO.: 112048.08 DWG. FILE: 3.04.DWG

P3.05
SHEET 28 OF 62

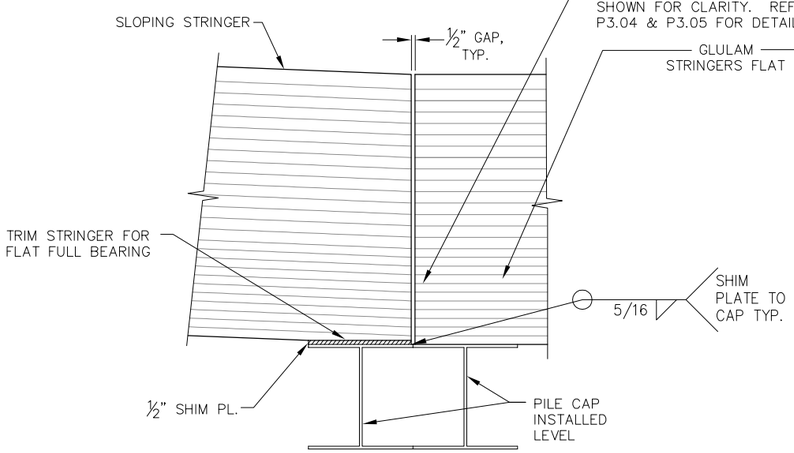

A - SLOPED STRINGER TRANSITION DETAIL

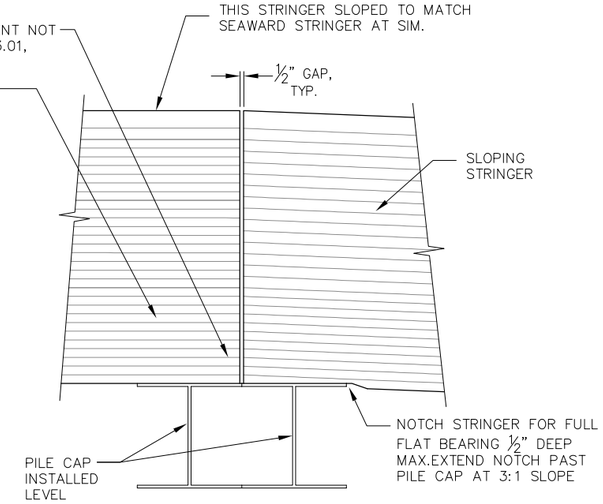

B - SLOPED STRINGER TRANSITION DETAIL

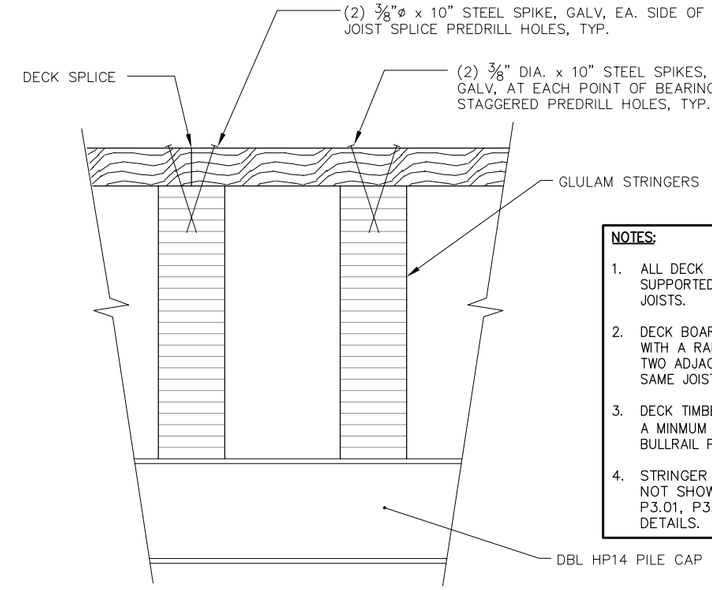

NOTES:

1. ALL DECK TIMBER SHALL BE SUPPORTED BY A MINIMUM OF TWO JOISTS.
2. DECK BOARDS SHALL BE SPLICED WITH A RANDOM LAYOUT WITH NO TWO ADJACENT BOARDS SPLICED AT SAME JOIST.
3. DECK TIMBER BOARDS SHALL HAVE A MINMUM LENGTH OF 12'-0", AT BULLRAIL POST LOCATIONS.
4. STRINGER CONNECTION WELDMENT NOT SHOWN FOR CLARITY. REF. P3.01, P3.04 & P3.05 FOR DETAILS.

C - TYPICAL DECK TO JOIST CONNECTION

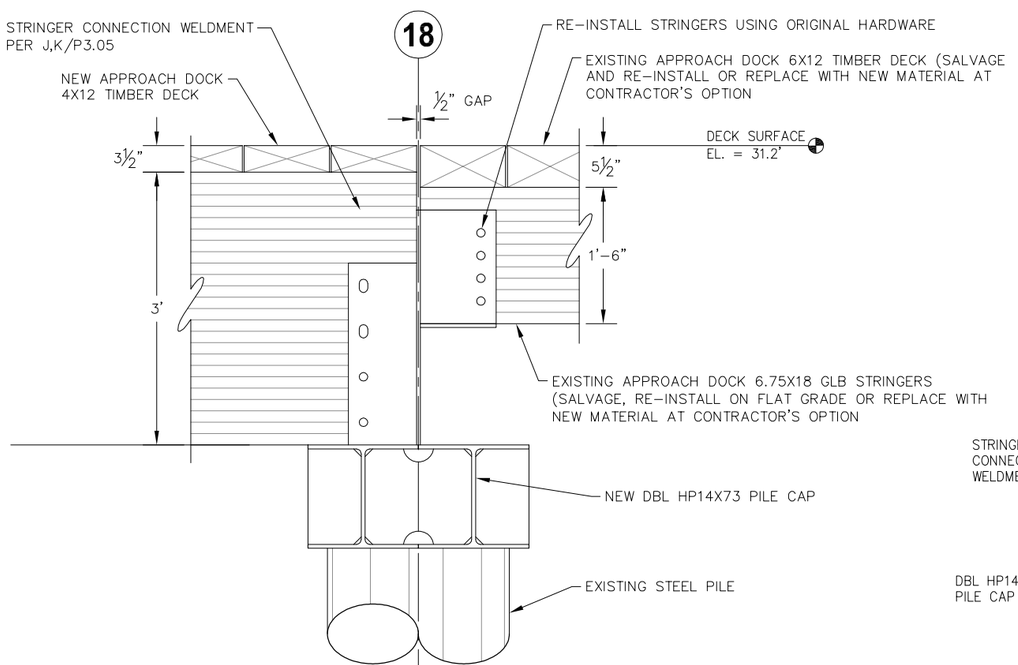

D P3.06 - APPROACH DOCK TRANSITION DETAIL

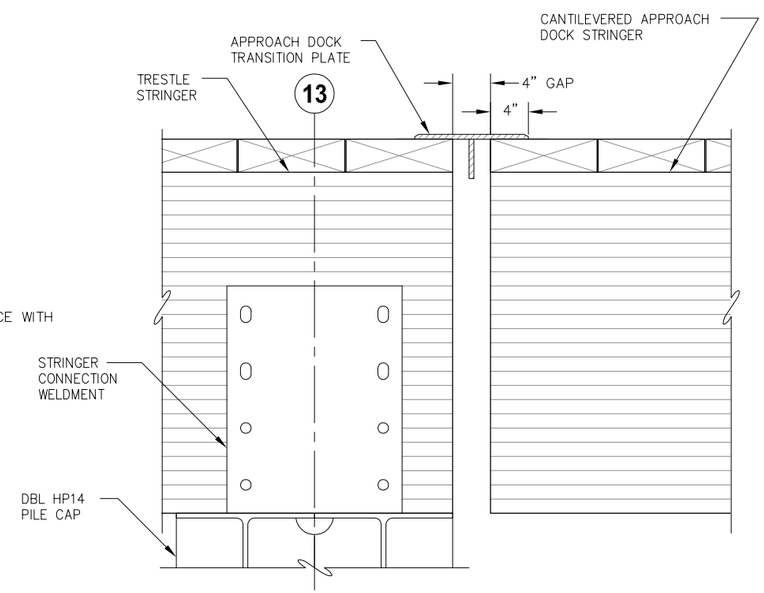

E P3.06 - APPROACH DOCK TRANSITION DETAIL

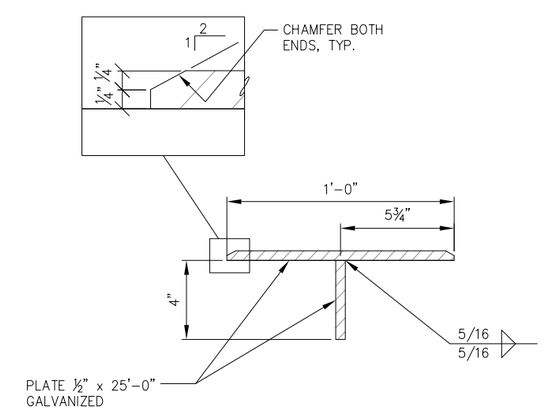

APPROACH DOCK TRANSITION PLATE

REVISIONS

REV.	DATE	DESCRIPTION	DWN.	CKD.	APP.

P N D ENGINEERS, INC.
9360 Glacier Highway Ste 100
Juneau, Alaska 99801
Phone: 907-586-2093
Fax: 907-586-2099
www.pndengineers.com

DESIGN: MDS CHECKED: CMG
DRAWN: MDS APPROVED: CRS
SCALE: NTS

STATE OF ALASKA 24 OTH Charles R. Somerville CE-8845 REGISTERED PROFESSIONAL ENGINEER
DATE: 3/1/13

HAINES BOROUGH
PORT CHILKOOT DOCK RENOVATION

SHEET TITLE: FRAMING DETAILS

P3.06

PND PROJECT NO.: 112048.08 DWG. FILE: 3.06.DWG

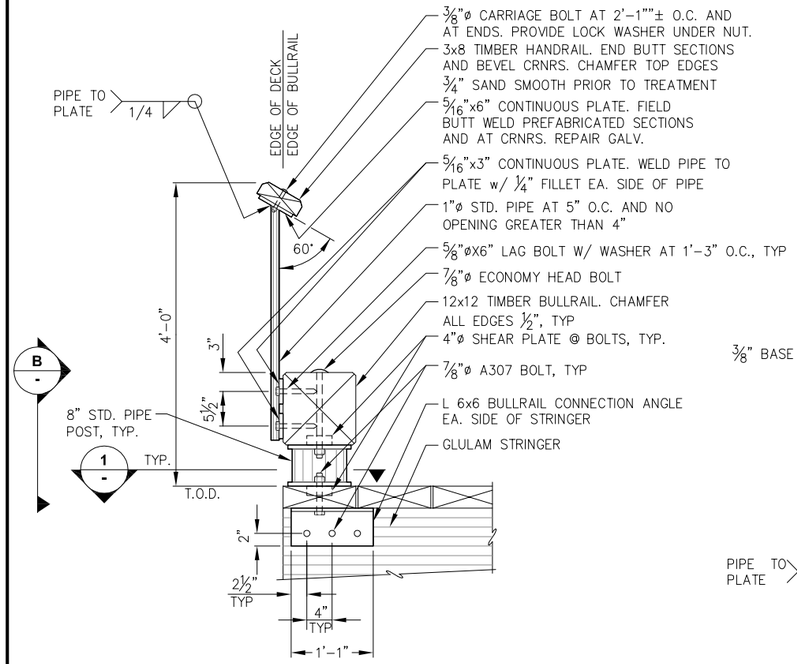

A **BULLRAIL/HANDRAIL SECTION**

NOTE: ALL BULLRAIL CONNECTION BOLTS SHALL BE 7/8"ø UNLESS OTHERWISE NOTED.

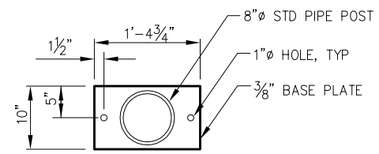

1 **POST BASE PLATE - PLAN**

NOTE: PROVIDE AT 6-FT O.C. MAX AND 2-FT MAX FROM BULLRAIL ENDS. MIN. 2 POST BASE PER 12x12 PIECE.

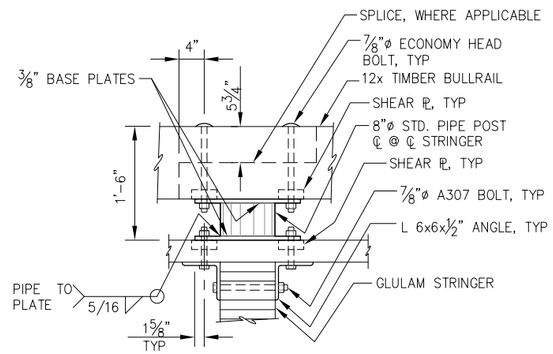

B **BULLRAIL ELEVATION**

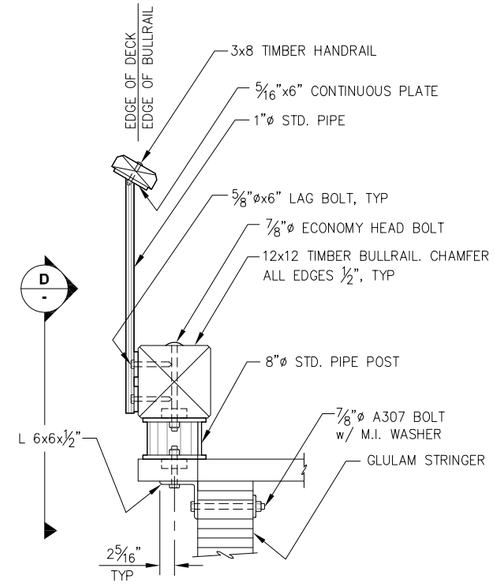

C P2.08 **BULLRAIL/HANDRAIL SECTION**

NOTE: DETAILS NOT SHOWN SIMILAR TO SECTION A.

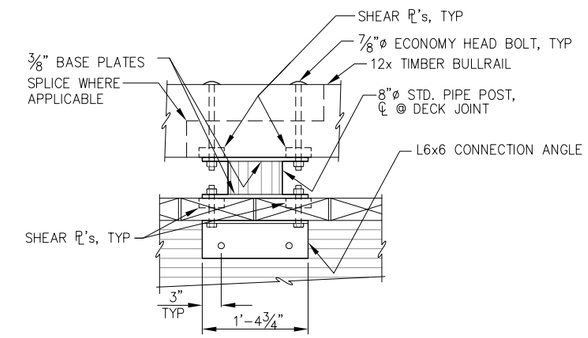

D **BULLRAIL ELEVATION**

NOTE: DETAILS NOT SHOWN SIMILAR TO ELEVATION B.

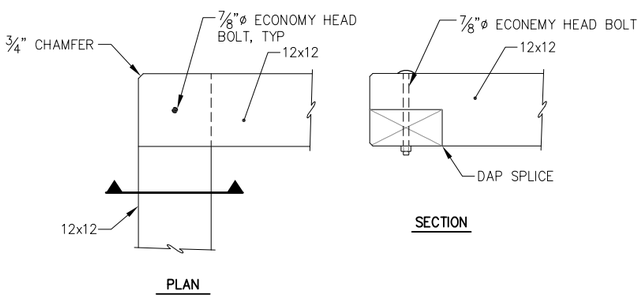

E **TYPICAL BULLRAIL CORNER DETAIL**

REVISIONS

REV.	DATE	DESCRIPTION	DWN.	CKD.	APP.

PND ENGINEERS, INC.
9360 Glacier Highway Ste 100
Juneau, Alaska 99801
Phone: 907-586-2093
Fax: 907-586-2099
www.pndengineers.com

DESIGN: SRY CHECKED: CRS
DRAWN: SRY APPROVED: CRS
SCALE: SCALE IN INCHES 0 12 24
DATE: 3/1/13

STATE OF ALASKA 24910 Charles R. Somerville CE-8845 REGISTERED PROFESSIONAL ENGINEER

HAINES BOROUGH
PORT CHILKOOT DOCK RENOVATION

SHEET TITLE:
HANDRAIL AND BULLRAIL DETAILS

P3.07
SHEET 30 OF 62

PND PROJECT NO.: 112048.08 DWG. FILE: 3.07.DWG

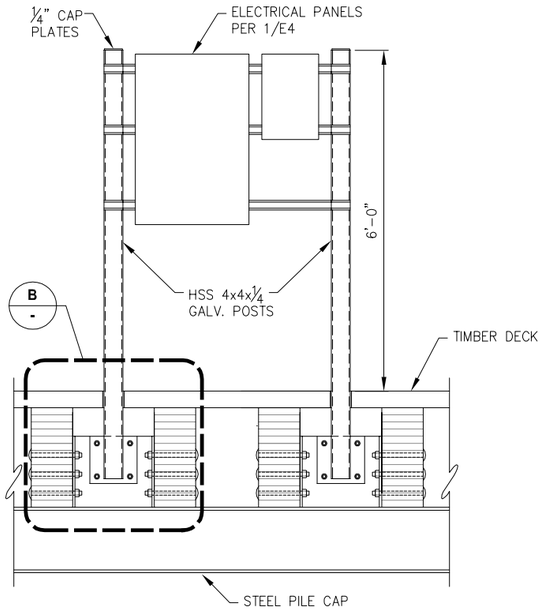

A - **ELECTRICAL PANEL MOUNTING DETAIL**
NTS

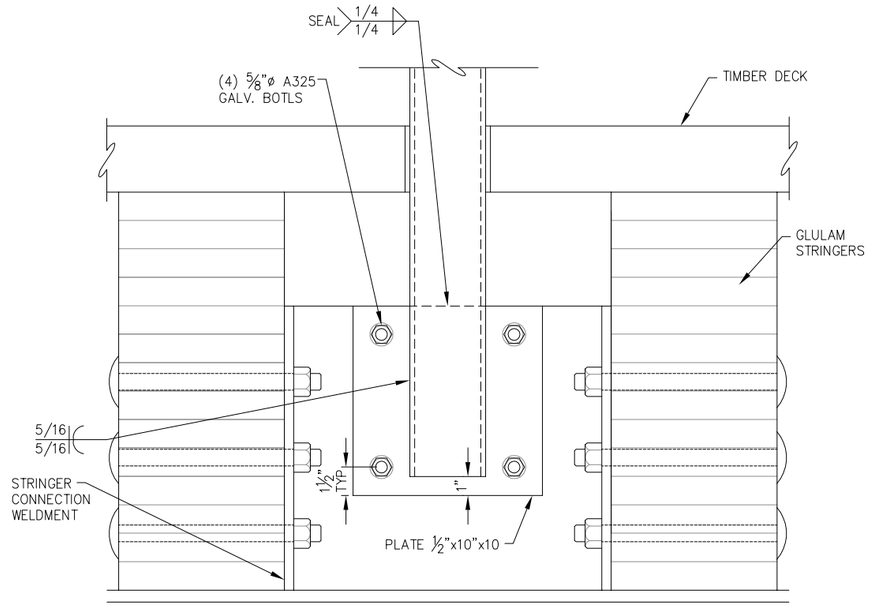

B - **ELECTRICAL PANEL POST BRACKET**
NTS

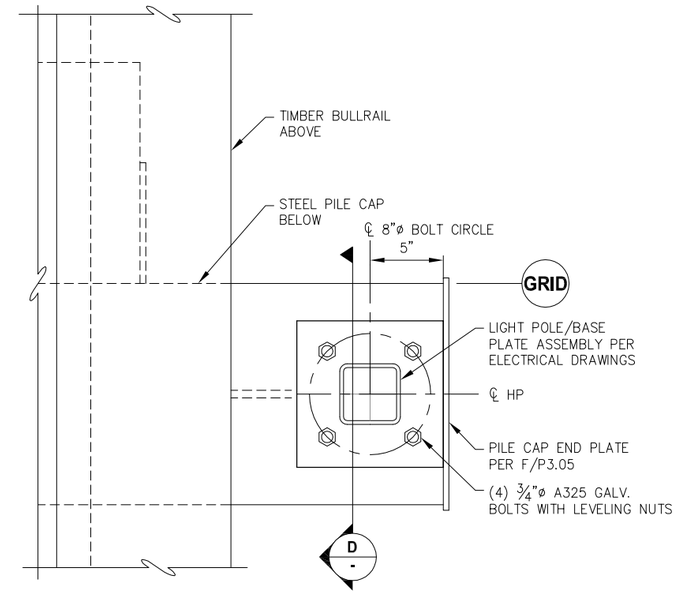

C - **LIGHT POLE MOUNTING PLAN**
NTS

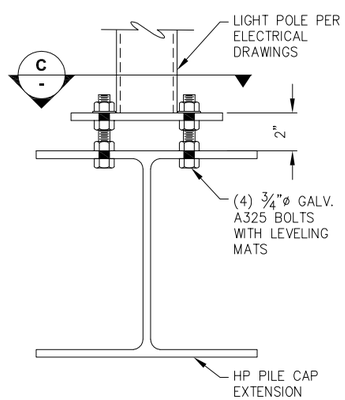

D - **LIGHT POLE MOUNTING SECTION**
NTS

REVISIONS

REV.	DATE	DESCRIPTION	DWN.	CKD.	APP.

P N D ENGINEERS, INC.
9360 Glacier Highway Ste 100
Juneau, Alaska 99801
Phone: 907-586-2093
Fax: 907-586-2099
www.pndengineers.com

DESIGN: SRY CHECKED: CRS
DRAWN: SRY APPROVED: CRS
SCALE: NTS
DATE: 3/1/13

STATE OF ALASKA — Charles R. Somerville — CE-8845 — REGISTERED PROFESSIONAL ENGINEER

HAINES BOROUGH
PORT CHILKOOT DOCK RENOVATION

SHEET TITLE:
ELECTRICAL PANEL AND LIGHT POLE MOUNTING DETAILS

PND PROJECT NO.: 112048.08 DWG. FILE: 3.08.DWG

P3.08
SHEET 31 OF 62

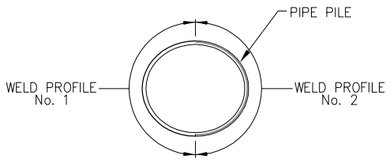

PLAN

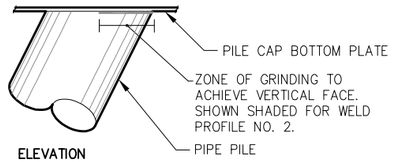

ELEVATION

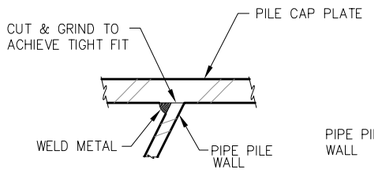

WELD PROFILE No. 1

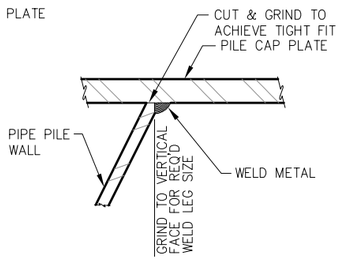

WELD PROFILE No. 2

A - BATTER PILE WELD DETAILS

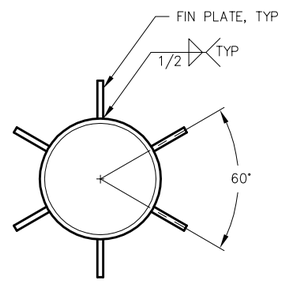

B - SECTION

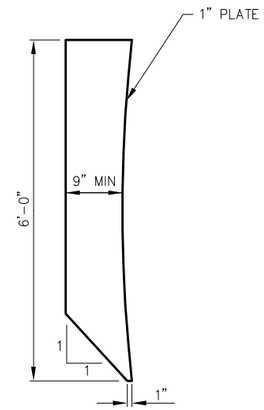

FIN PLATE

NOTE: MINIMUM WIDTH OF FIN PLATE SHALL INCREASE ONE INCH IF OUTSIDE EDGE OF FINS ARE CURVED TO MATCH INSIDE EDGE.

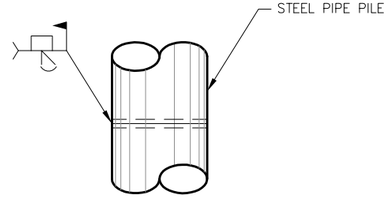

ELEVATION

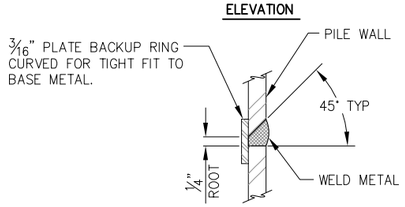

TYPICAL SECTION

C - TYPICAL PILE SPLICE WELD

TYPICAL FOR ALL FIELD PIPE PILE SPLICES

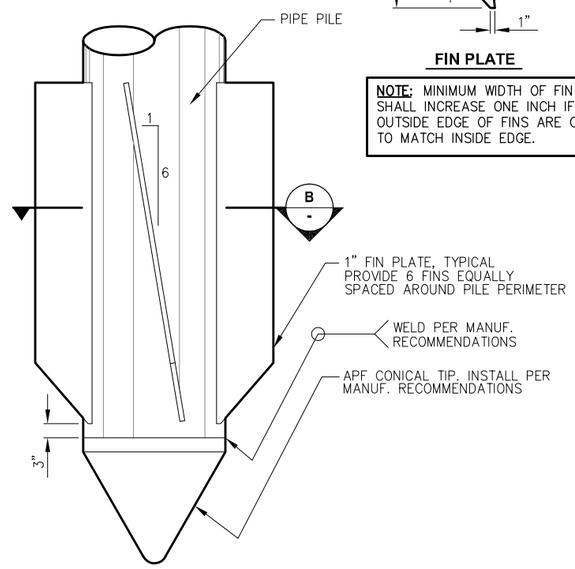

SPIN FIN PILE TIP

INSTALL CONICAL TIP ONLY, WITHOUT FINS, AT LOCATIONS INDICATED ON PILE SCHEDULE

PILE SCHEDULE

GRID	DESIGNATION	COMPRESSION LOAD (KIPS)	TENSION LOAD (KIPS)	PILE DIAMETER (IN)	PILE WALL THICKNESS (IN)	REQUIRED FURNISHED LENGTH (FT)	PILE TIP
2–F	VERTICAL	335	–215	24	0.500	100	CONICAL TIP W/ SPIN FIN
	BATTER	305	–305	24	0.500	110	CONICAL TIP W/ SPIN FIN
2–G	VERTICAL	335	–215	24	0.500	100	CONICAL TIP W/ SPIN FIN
	BATTER	305	–305	24	0.500	110	CONICAL TIP W/ SPIN FIN
	BATTER	95	–95	24	0.500	110	CONICAL TIP
3–F	VERTICAL	230		24	0.500	100	CONICAL TIP
3–G	VERTICAL	230	–20	24	0.500	100	CONICAL TIP
	BATTER	95	–95	24	0.500	120	CONICAL TIP
4–F	VERTICAL	235		24	0.500	110	CONICAL TIP
4–G	VERTICAL	235	–20	24	0.500	110	CONICAL TIP
	BATTER	95	–95	24	0.500	120	CONICAL TIP
5–F	VERTICAL	235		24	0.500	120	CONICAL TIP
5–G	VERTICAL	235	–20	24	0.500	120	CONICAL TIP
	BATTER	95	–95	24	0.500	130	CONICAL TIP
6–F	VERTICAL	235		24	0.500	130	CONICAL TIP
6–G	VERTICAL	235	–20	24	0.500	130	CONICAL TIP
	BATTER	95	–95	24	0.500	140	CONICAL TIP
7–C	VERTICAL	180	–85	24	0.500	140	CONICAL TIP
	BATTER	150	–150	24	0.500	160	CONICAL TIP
7–F	VERTICAL	290		24	0.500	140	CONICAL TIP
7–G	VERTICAL	220		24	0.500	140	CONICAL TIP
8–C	VERTICAL	95		24	0.500	130	CONICAL TIP
8–E	VERTICAL	180	–85	24	0.500	130	CONICAL TIP
	BATTER	150	–150	24	0.500	150	CONICAL TIP
9–D	VERTICAL	105		24	0.500	130	CONICAL TIP
10–D	VERTICAL	65	–25	24	0.500	130	CONICAL TIP
	BATTER	50	–50	24	0.500	140	CONICAL TIP
10–E	VERTICAL	60		24	0.500	130	CONICAL TIP
11–C.9	VERTICAL	65	–45	16	0.500	140	CONICAL TIP
11–E.1	VERTICAL	65	–45	16	0.500	140	CONICAL TIP
12–E.1	VERTICAL	65	–45	16	0.500	140	CONICAL TIP
13–F	VERTICAL	165	–45	24	0.500	130	CONICAL TIP
	BATTER	95	–95	24	0.500	140	CONICAL TIP
13–G	VERTICAL	160		24	0.500	130	CONICAL TIP
14–H	VERTICAL	295	–70	24	0.5000	130	CONICAL TIP
	BATTER	135	–270	24	0.5000	140	CONICAL TIP W/ SPIN FIN
	BATTER	55	–55	24	0.5000	140	CONICAL TIP
14–J	VERTICAL	290	–75	24	0.5000	130	CONICAL TIP
	BATTER	135	–270	24	0.5000	140	CONICAL TIP W/ SPIN FIN
15–H	VERTICAL	240	–15	24	0.5000	110	CONICAL TIP
	BATTER	95	–95	24	0.5000	120	CONICAL TIP
15–J	VERTICAL	240		24	0.5000	110	CONICAL TIP
16–H	VERTICAL	240	–15	24	0.5000	120	CONICAL TIP
	BATTER	95	–95	24	0.5000	130	CONICAL TIP
16–J	VERTICAL	240		24	0.5000	120	CONICAL TIP
17–H	VERTICAL	240	–15	24	0.5000	130	CONICAL TIP
	BATTER	95	–95	24	0.5000	140	CONICAL TIP
17–J	VERTICAL	255		24	0.5000	130	CONICAL TIP

NOTE: PILES SHALL BE DRIVEN TO FULL LENGTH TO SATISFY BOTH END BEARING AND PENETRATION REQUIREMENTS UNLESS DIRECTED OTHERWISE BY THE ENGINEER.

REVISIONS

REV.	DATE	DESCRIPTION	DWN.	CKD.	APP.

PND ENGINEERS, INC.
9360 Glacier Highway Ste 100
Juneau, Alaska 99801
Phone: 907-586-2093
Fax: 907-586-2099
www.pndengineers.com

DESIGN: MDS CHECKED: CRS
DRAWN: MDS APPROVED: CRS
SCALE: NTS

STATE OF ALASKA — Charles R. Somerville — CE-8845 — REGISTERED PROFESSIONAL ENGINEER

DATE: 3/1/13

HAINES BOROUGH
PORT CHILKOOT DOCK RENOVATION

SHEET TITLE:
PILE SCHEDULE AND DETAILS

PND PROJECT NO.: 112048.08 DWG. FILE: 3.09.DWG

P3.09
SHEET 32 OF 62

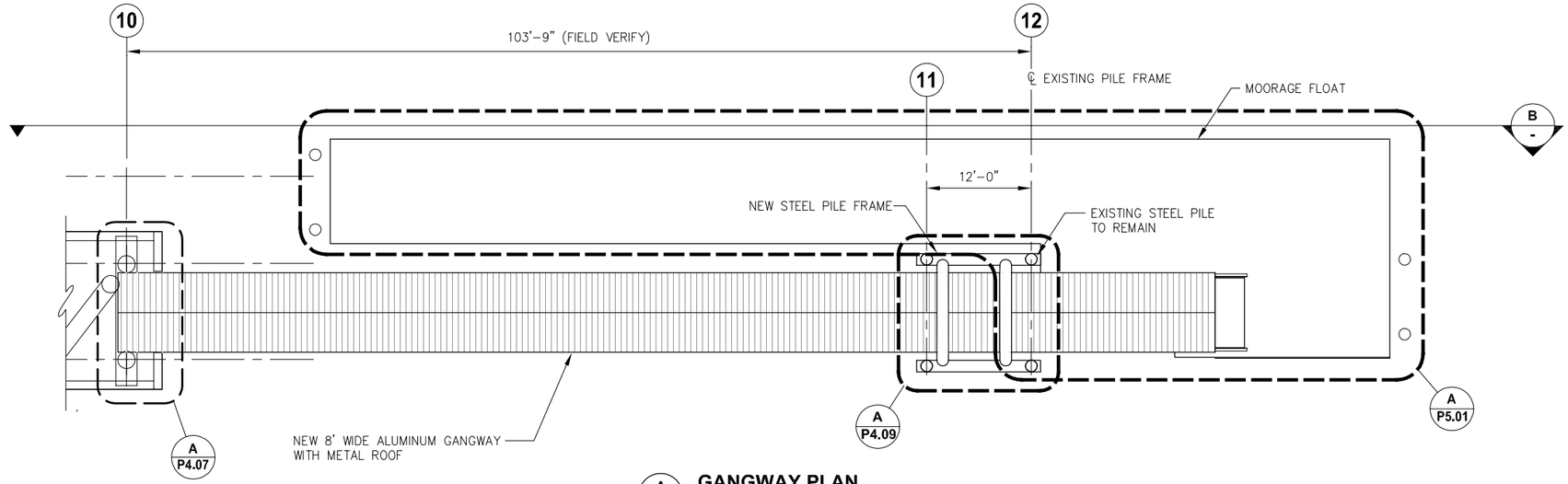

A P2.01 **GANGWAY PLAN**

SCALE IN FEET
0 8 16 FT.

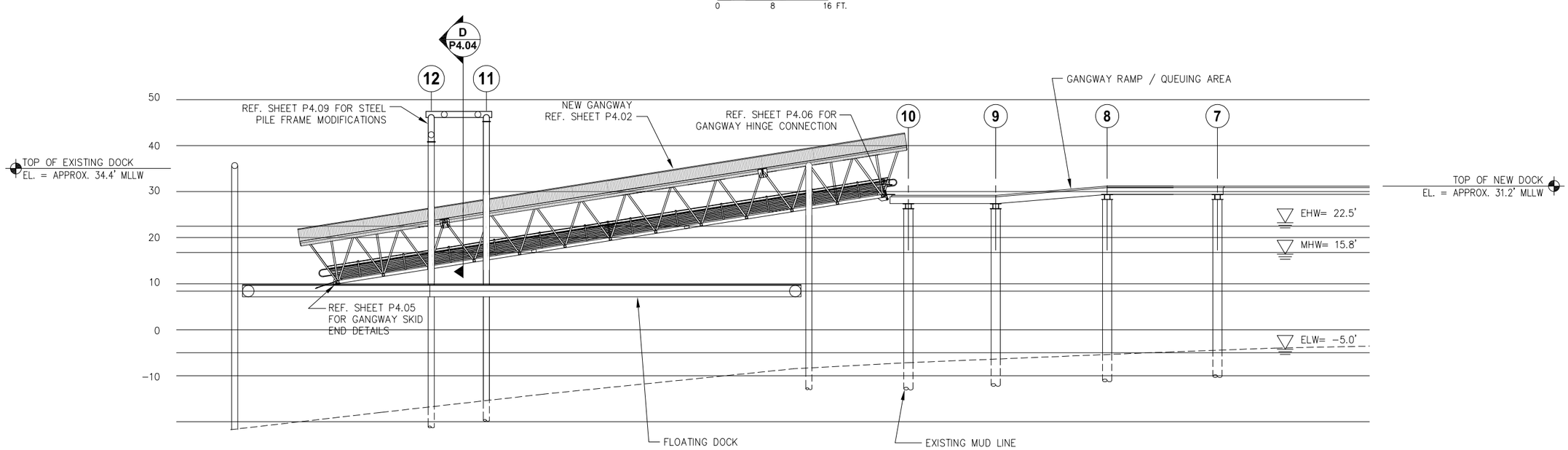

B - **GANGWAY ELEVATION**

SCALE IN INCHES
0 12 24

REVISIONS

REV.	DATE	DESCRIPTION	DWN.	CKD.	APP.

PND ENGINEERS, INC.
9360 Glacier Highway Ste 100
Juneau, Alaska 99801
Phone: 907-586-2093
Fax: 907-586-2099
www.pndengineers.com

DESIGN: SRY CHECKED: CRS
DRAWN: SRY APPROVED: CRS
SCALE: AS SHOWN

STATE OF ALASKA
24 OTH
Charles R. Somerville
CE-8845
REGISTERED PROFESSIONAL ENGINEER
DATE: 3/1/13

HAINES BOROUGH
PORT CHILKOOT DOCK RENOVATION

SHEET TITLE:
GANGWAY GENERAL PLAN AND ELEVATION

PND PROJECT NO.: 112048.08 DWG. FILE: 4.01.DWG

P4.01

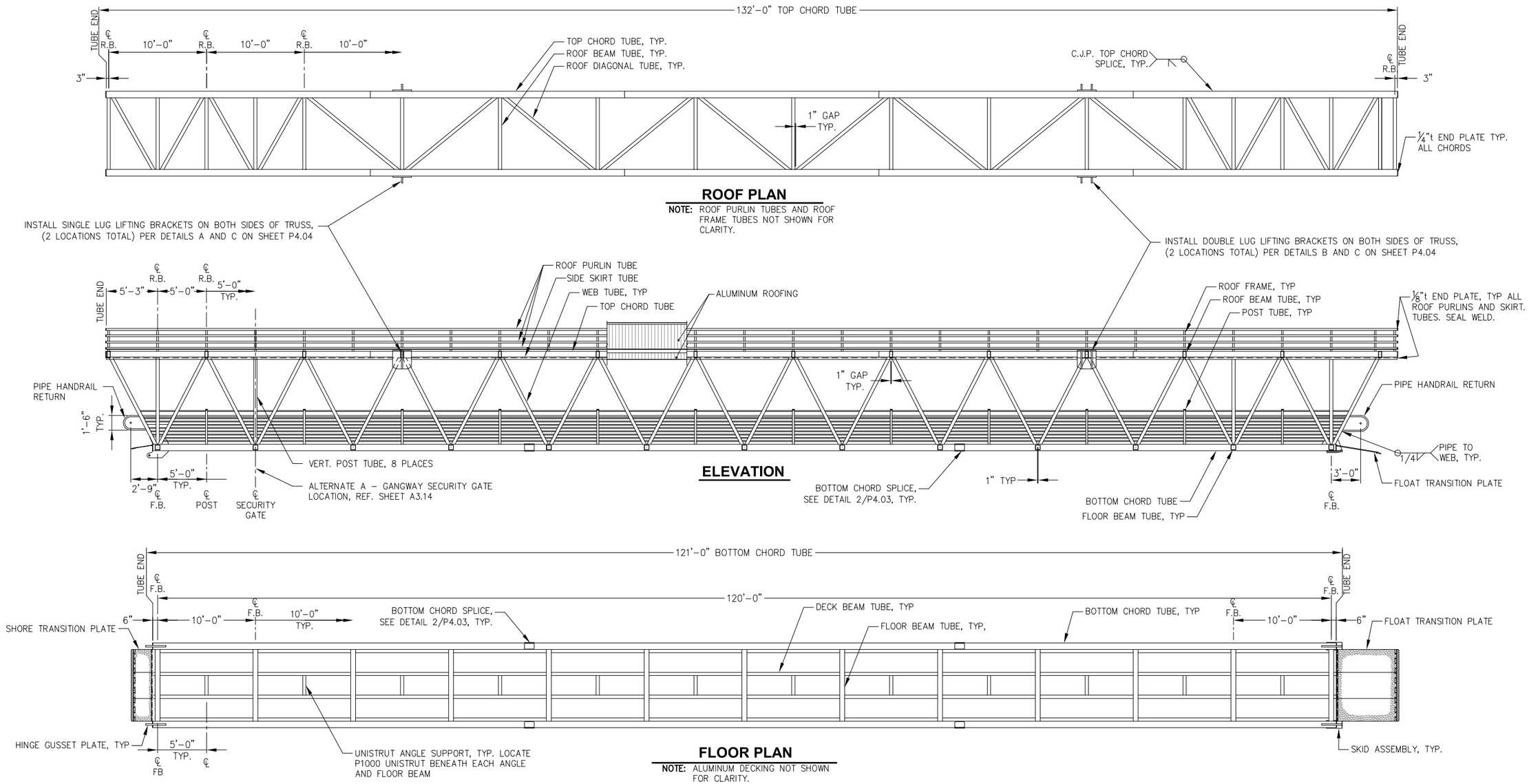

ROOF PLAN

NOTE: ROOF PURLIN TUBES AND ROOF FRAME TUBES NOT SHOWN FOR CLARITY.

ELEVATION

FLOOR PLAN

NOTE: ALUMINUM DECKING NOT SHOWN FOR CLARITY.

GENERAL NOTES

1. NO BOTTOM CHORD SPLICES IN MIDDLE 24'-0" OF GANGWAY.
2. CHORD SPLICE LOCATIONS SHOWN FOR ILLUSTRATION ONLY. ACTUAL LOCATIONS SHALL BE SUBMITTED BY FABRICATOR FOR ENGINEER APPROVAL.
3. PROVIDE CAMBER OF 4" MIN. AT MID-SPAN.
4. ALL MATERIALS SHALL BE ALUMINUM TYPE 6061-T6 UNLESS OTHERWISE NOTED.
5. PROVIDE WEEP HOLES AT DOWNHILL END OF ALL CHORD TUBES, DECK BEAM TUBES, ROOF BRACES, AND SKIRT TUBES. FABRICATOR SHALL SUBMIT HOLE LOCATIONS TO ENGINEER FOR APPROVAL.
6. TOP SIDE SKIRT TUBE NOT SHOWN IN ELEVATION FOR CLARITY.
7. FOR BOTTOM CHORD, PROVIDE ¼"t END PLATE WITH ¼" ALL AROUND FILLET WELD. FOR ALL OTHER OPEN ENDED MEMBERS PROVIDE END PLATE OF EQUAL WALL THICKNESS AND SEAL WELD
8. CONTRACTOR MAY SUBMIT FOR ENGINEER'S APPROVAL VARIATIONS IN PRESENTED MEMBER SIZES AND CONFIGURATION. OVERALL DIMENSIONS SHALL REMAIN AS DEPICTED IN THESE DRAWINGS. CONTRACTOR SHALL SUBMIT A SIGNED AND STAMPED SET OF DRAWINGS AND CALCULATIONS BY A LICENCED P.E. IN THE STATE OF ALASKA FOR APPROVAL.

WELDING NOTE:
WELD ALL JOINTS WITH ¼" FILLET MIN., U.N.O., WELD ALL AROUND OR EQUIVALENT.

HAINES BOROUGH ALASKA

REVISIONS

REV.	DATE	DESCRIPTION	DWN.	CKD.	APP.

PND ENGINEERS, INC.
9360 Glacier Highway Ste 100
Juneau, Alaska 99801
Phone: 907-586-2093
Fax: 907-586-2099
www.pndengineers.com

DESIGN: SRY CHECKED: CRS
DRAWN: SRY APPROVED: CRS
SCALE: NTS

STATE OF ALASKA — Charles R. Somerville — CE-8845 — REGISTERED PROFESSIONAL ENGINEER
DATE: 3/1/13

HAINES BOROUGH
PORT CHILKOOT DOCK RENOVATION

SHEET TITLE:
GANGWAY FRAMING PLAN AND ELEVATION

PND PROJECT NO.: 112048.08 DWG. FILE: 4.02.DWG

P4.02
SHEET 34 OF 62

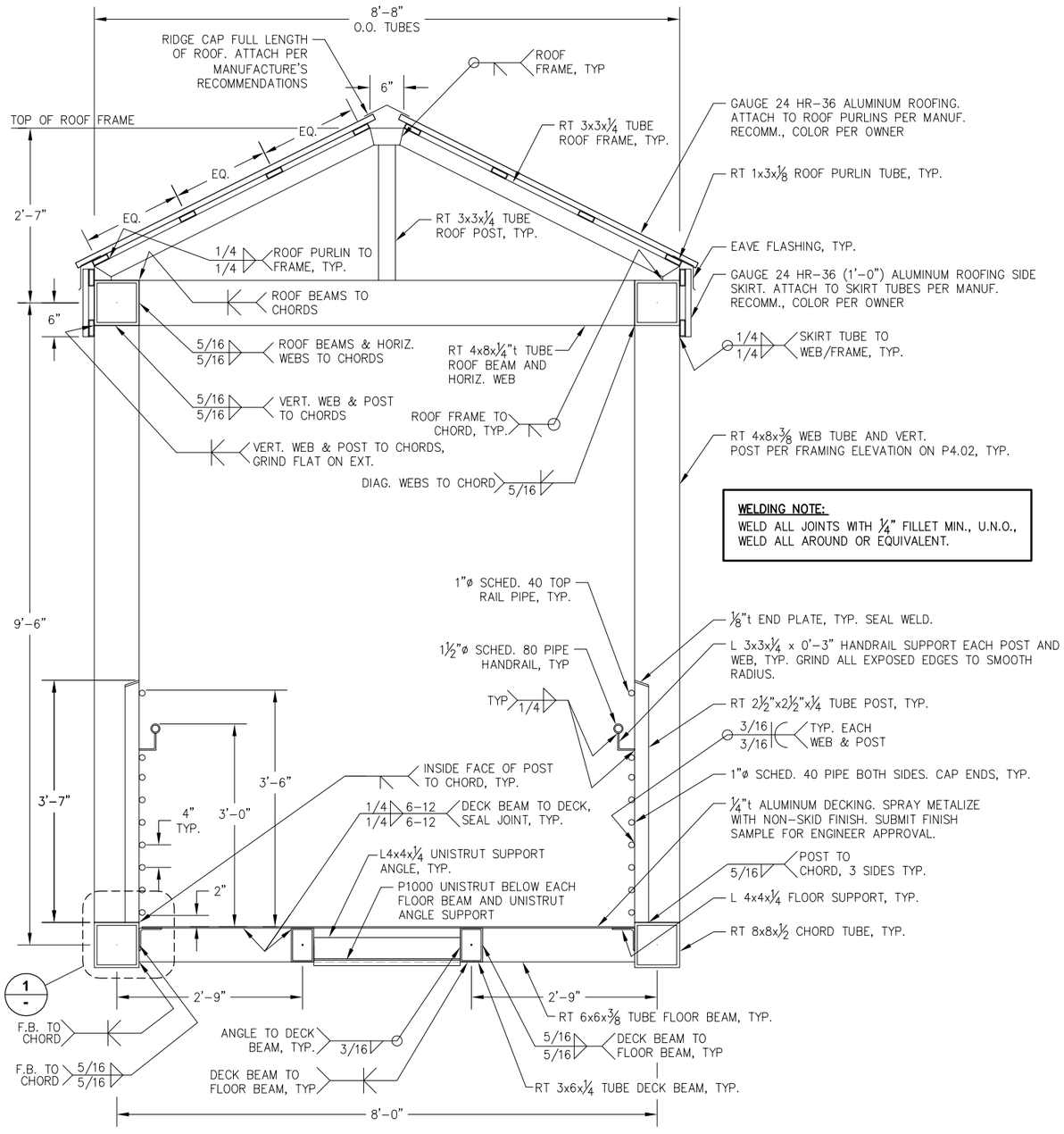

TYPICAL SECTION

WELDING NOTE:
WELD ALL JOINTS WITH ¼" FILLET MIN., U.N.O., WELD ALL AROUND OR EQUIVALENT.

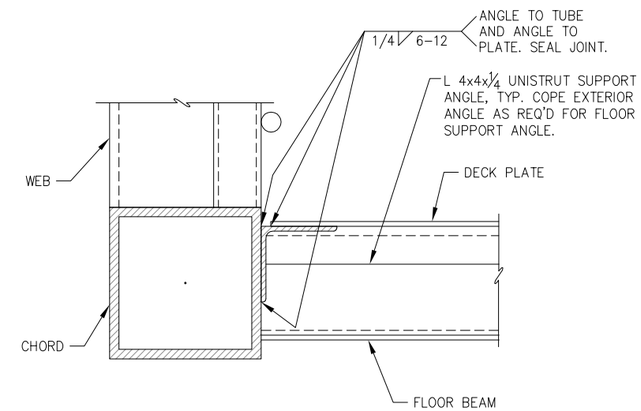

1 - **DETAIL 1**

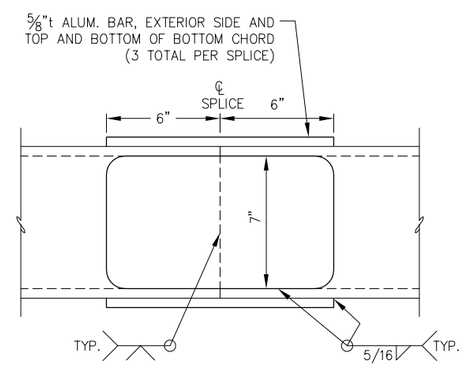

BOTTOM CHORD SPLICE

REVISIONS

REV.	DATE	DESCRIPTION	DWN.	CKD.	APP.

P N D ENGINEERS, INC.
9360 Glacier Highway Ste 100
Juneau, Alaska 99801
Phone: 907-586-2093
Fax: 907-586-2099
www.pndengineers.com

DESIGN: SRY CHECKED: CRS
DRAWN: SRY APPROVED: CRS
SCALE: NTS
DATE: 3/1/13

STATE OF ALASKA — Charles R. Somerville — CE-8845 — REGISTERED PROFESSIONAL ENGINEER

HAINES BOROUGH
PORT CHILKOOT DOCK RENOVATION

SHEET TITLE:
GANGWAY TYPICAL SECTION AND DETAILS

PND PROJECT NO.: 112048.08 DWG. FILE: 4.03.DWG

P4.03
SHEET 35 OF 62

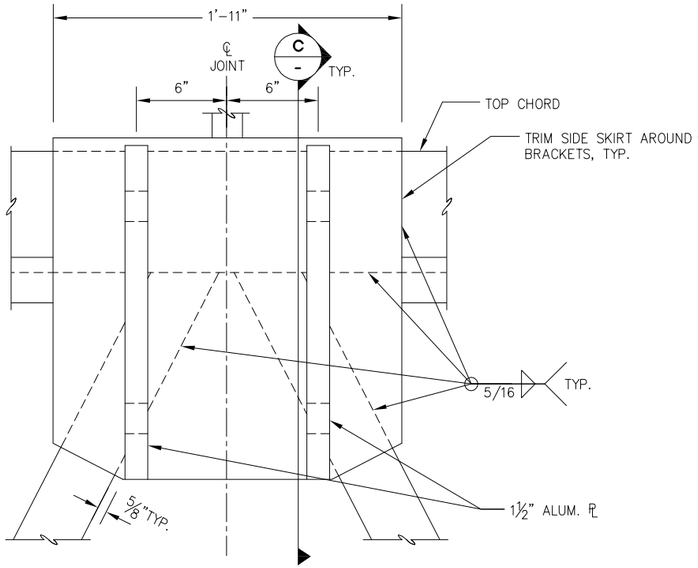

A GANGWAY LIFTING BRACKET

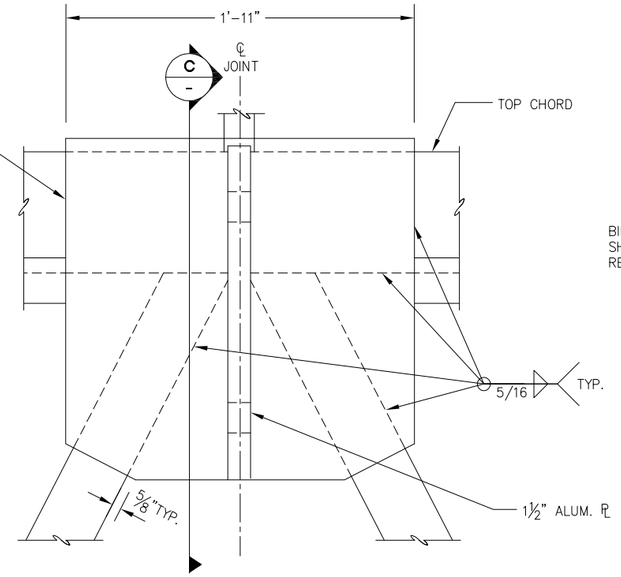

B GANGWAY LIFTING BRACKET

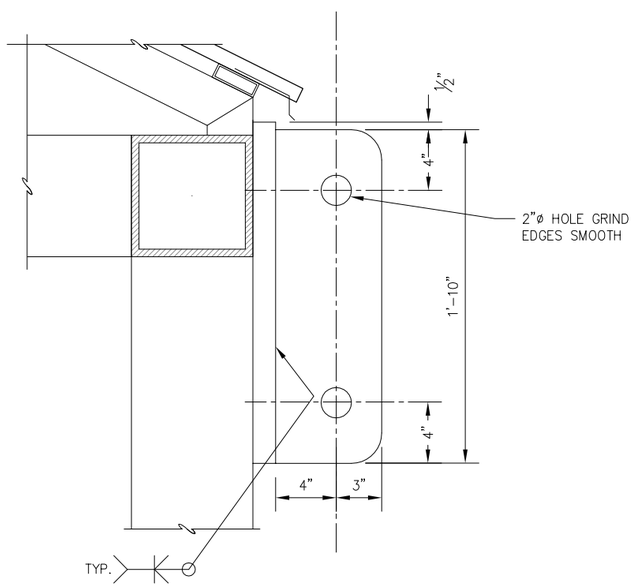

C GANGWAY LIFT BRACKET DETAIL

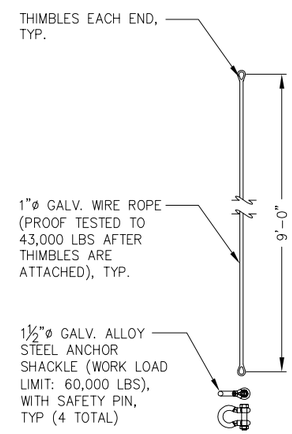

GANGWAY LIFTING ASSEMBLY

(2 TOTAL)

NOTE: OWNER TO PROVIDE GANGWAY LIFTING ASSEMBLY COMPONENTS.

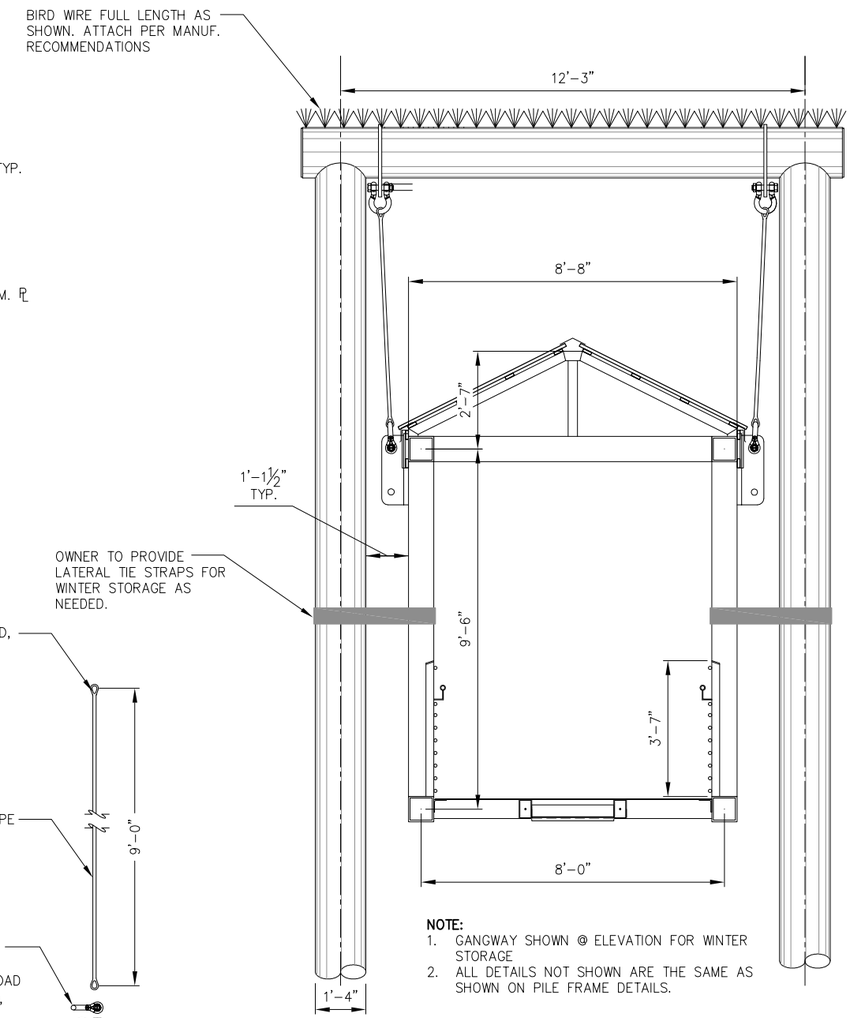

NOTE:
1. GANGWAY SHOWN @ ELEVATION FOR WINTER STORAGE
2. ALL DETAILS NOT SHOWN ARE THE SAME AS SHOWN ON PILE FRAME DETAILS.

D P4.01 GANGWAY LIFTING PLAN

REVISIONS

REV.	DATE	DESCRIPTION	DWN.	CKD.	APP.

PND ENGINEERS, INC.
9360 Glacier Highway Ste 100
Juneau, Alaska 99801
Phone: 907-586-2093
Fax: 907-586-2099
www.pndengineers.com

DESIGN: SRY CHECKED: CRS
DRAWN: SRY APPROVED: CRS
SCALE: NTS

STATE OF ALASKA — Charles R. Somerville — CE-8845 — REGISTERED PROFESSIONAL ENGINEER
DATE: 3/1/13

HAINES BOROUGH
PORT CHILKOOT DOCK RENOVATION

SHEET TITLE: GANGWAY LIFTING BRACKET DETAILS

PND PROJECT NO.: 112048.08 DWG. FILE: 4.04.DWG

P4.04

SHEET 36 OF 62

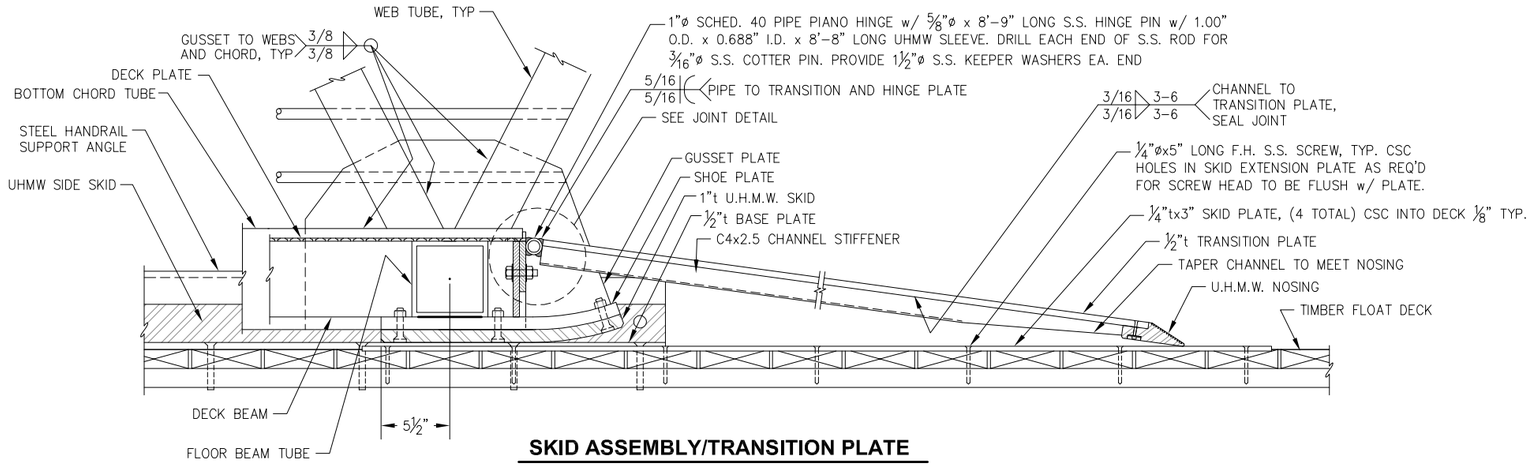

SKID ASSEMBLY/TRANSITION PLATE

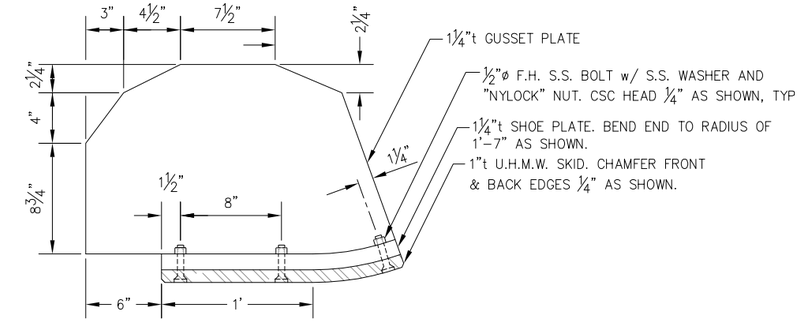

GUSSET/SKID PLATE - (2 TOTAL)

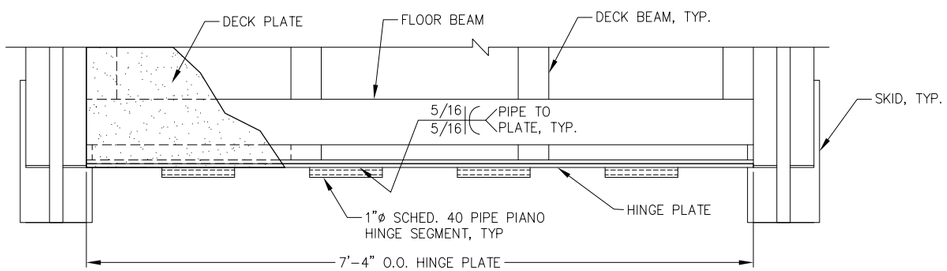

WELDING NOTE:
WELD ALL JOINTS WITH ¼" FILLET U.N.O.
WELD ALL AROUND OR EQUIVALENT.

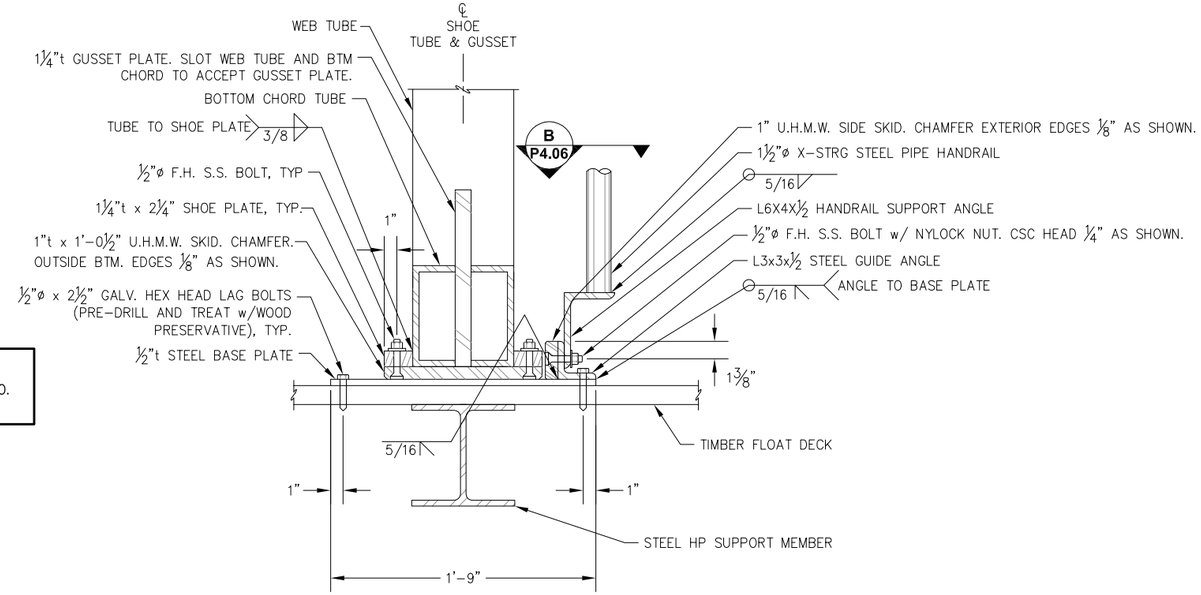

SKID ASSEMBLY SECTION

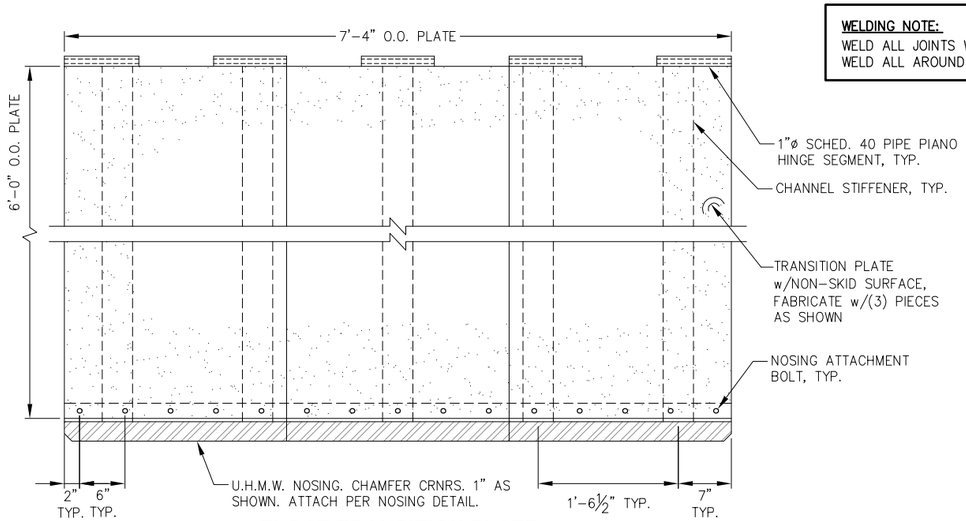

FLOAT TRANSITION PLATE

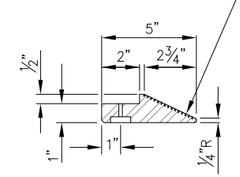

SOLID U.H.M.W. POLYETHYLENE PER SPECIFICATIONS. PROVIDE 3/16"ø HOLE w/ 1 1/16"ø x 5/16" DEEP CSC AS SHOWN. ATTACH NOSING w/ #10 S.S. FLATHEAD PHILLIPS BOLT w/ "NYLOCK" NUT AND 1"ø S.S. FENDER WASHER. TRIM BOLT AS REQ'D TO BE FLUSH w/ NUT. LOCATE BOLTS PER TRANSITON PLATE PLAN. CHAMFER BACK EDGE ⅛" AS SHOWN. FABRICATOR TO PROVIDE NON-SKID SURFACE ON TOP OF NOSING. SUBMIT FOR APPROVAL.

UHMW NOSING

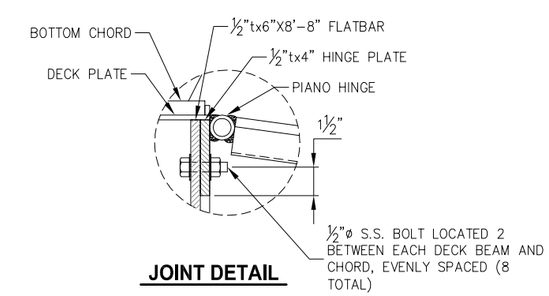

JOINT DETAIL

HAINES BOROUGH ALASKA

REVISIONS

REV.	DATE	DESCRIPTION	DWN.	CKD.	APP.

PND ENGINEERS, INC.
9360 Glacier Highway Ste 100
Juneau, Alaska 99801
Phone: 907-586-2093
Fax: 907-586-2099
www.pndengineers.com

DESIGN: SRY CHECKED: CRS
DRAWN: SRY APPROVED: CRS
SCALE: NTS

STATE OF ALASKA — Charles R. Somerville — CE-8845 — REGISTERED PROFESSIONAL ENGINEER
DATE: 3/1/13

HAINES BOROUGH
PORT CHILKOOT DOCK RENOVATION

SHEET TITLE:
GANGWAY SKID END DETAILS

P4.05

PND PROJECT NO.: 112048.08 DWG. FILE: 4.05.DWG

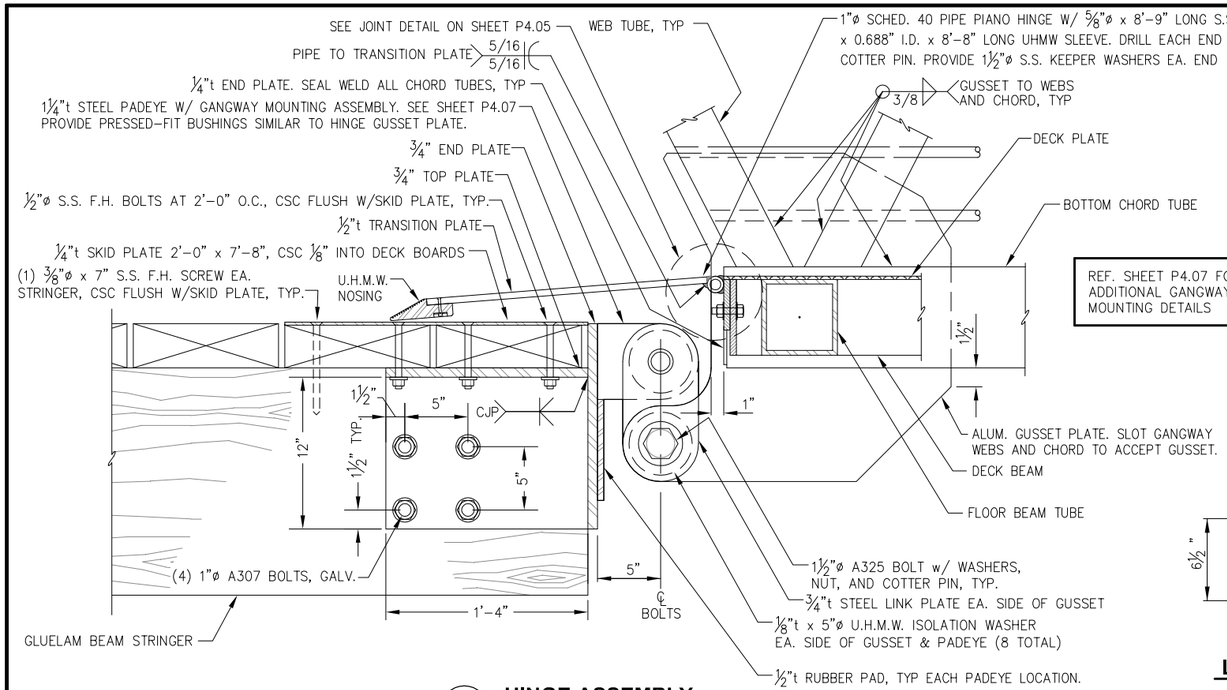

REF. SHEET P4.07 FOR ADDITIONAL GANGWAY MOUNTING DETAILS

WELDING NOTE:
WELD ALL JOINTS WITH ¼" FILLET U.N.O.
WELD ALL AROUND OR EQUIVALENT.

A P4.07 HINGE ASSEMBLY

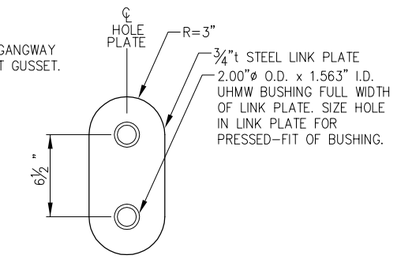

LINK PLATE
(4 TOTAL)

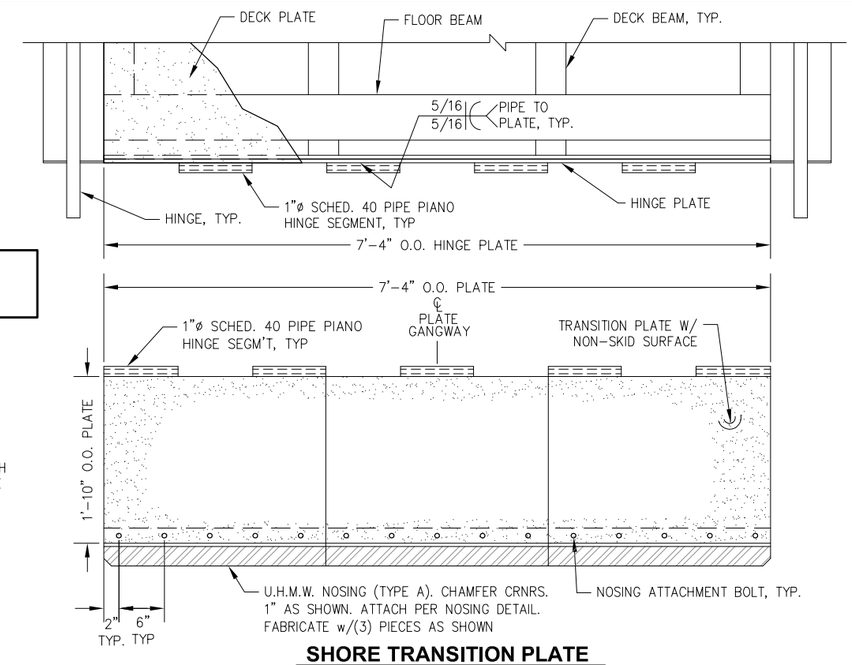

SHORE TRANSITION PLATE

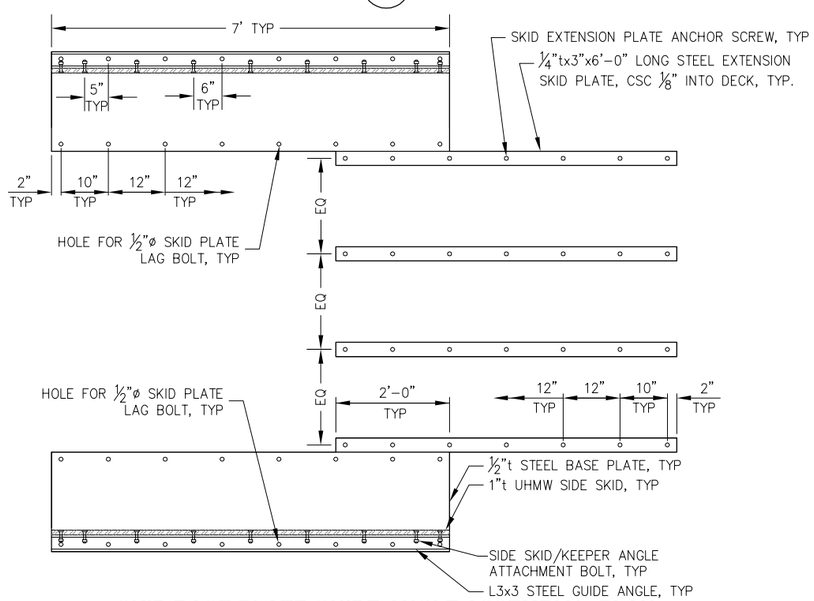

SKID BASE PLATE/GUIDE ANGLE ASSEMBLY - PLAN

NOTE: STEEL KEEPER ANGLES NOT SHOWN FOR CLARITY. PERMANENTLY ATTACH SKID BASE PLATE TO FLOAT AT ENGINEER DIRECTED LOCATION ONLY AFTER SEVERAL TIDE CYCLES TO ASSURE PROPER POSITION.

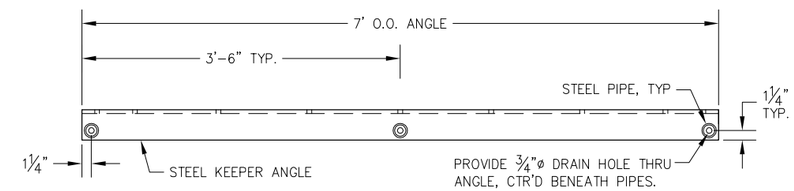

B - HANDRAIL PLAN

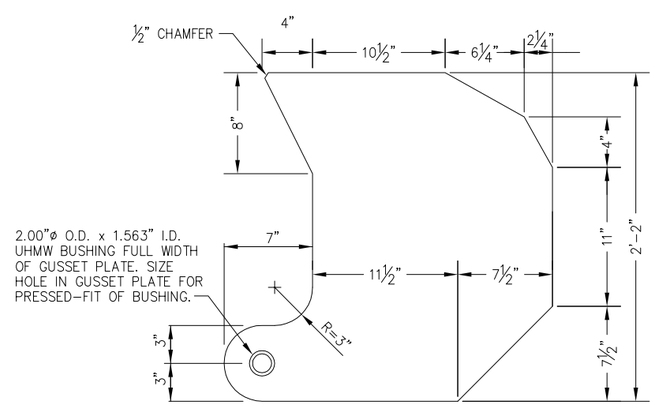

HINGE GUSSET PLATE
1¼"t ALUMINUM PLATE

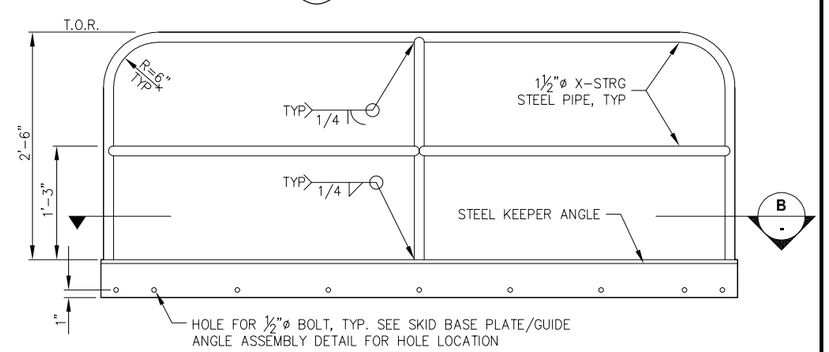

HANDRAIL ELEVATION
(2 TOTAL – PROVIDE EACH SIDE OF GANGWAY)

REVISIONS

REV.	DATE	DESCRIPTION	DWN.	CKD.	APP.

PND ENGINEERS, INC.
9360 Glacier Highway Ste 100
Juneau, Alaska 99801
Phone: 907-586-2093
Fax: 907-586-2099
www.pndengineers.com

DESIGN: SRY CHECKED: CRS
DRAWN: SRY APPROVED: CRS
SCALE: NTS

STATE OF ALASKA 49TH Charles R. Somerville CE-8845 REGISTERED PROFESSIONAL ENGINEER
DATE: 3/1/13

HAINES BOROUGH
PORT CHILKOOT DOCK RENOVATION

SHEET TITLE:
GANGWAY HINGE END DETAILS

PND PROJECT NO.: 112048.08 DWG. FILE: 4.06.DWG

P4.06
SHEET 38 OF 62

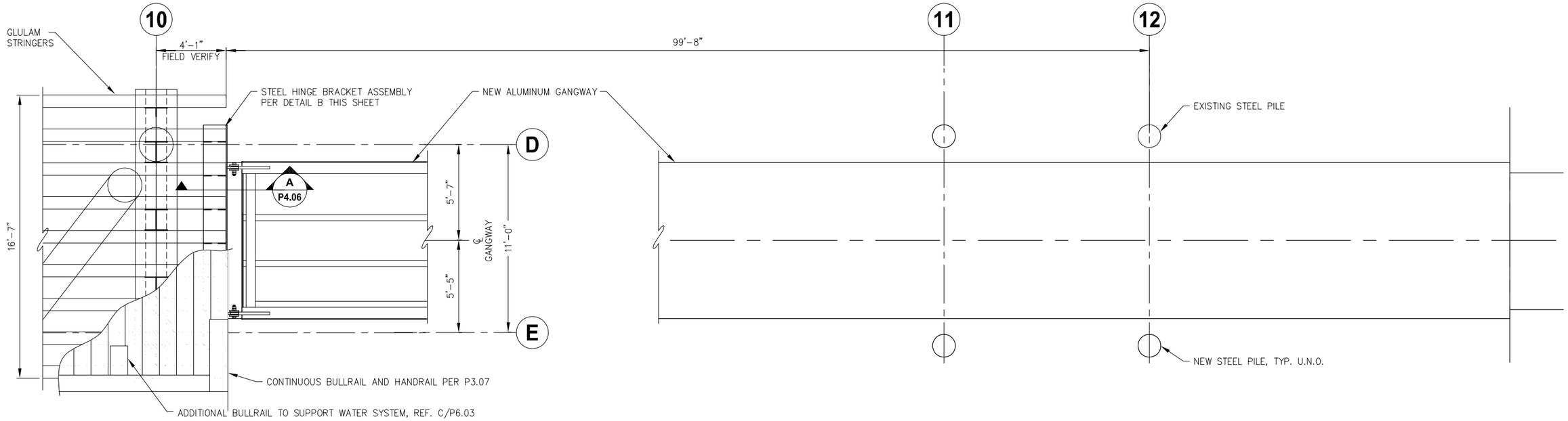

A / -

GANGWAY HINGE BRACKET PLAN

NOTE: ORDER (9) STRINGERS 25' LONG ON THIS DECK SECTION TO ALLOW FOR FIELD ADJUSTMENT OF UPPER GANGWAY MOUNTING LOCATION. FIELD CUT STRINGERS AS NEEDED TO ACCOMMODATE GANGWAY LOCATION WHICH IS DEFINED BY LOCATION OF EXISTING FLOAT AND PILE FRAMES.

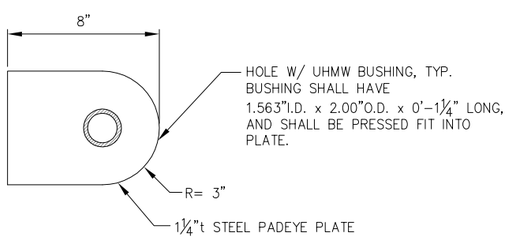

C / -

GANGWAY HINGE PADEYE ASSEMBLY

(2 TOTAL)

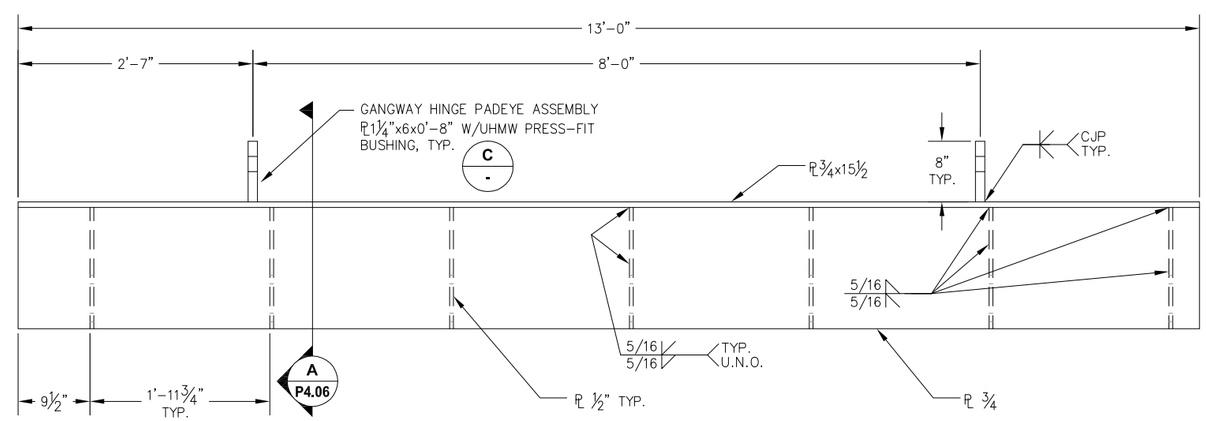

B / -

GANGWAY HINGE BRACKET DETAIL

REVISIONS

REV.	DATE	DESCRIPTION	DWN.	CKD.	APP.

PND ENGINEERS, INC.
9360 Glacier Highway Ste 100
Juneau, Alaska 99801
Phone: 907-586-2093
Fax: 907-586-2099
www.pndengineers.com

DESIGN: SRY CHECKED: CRS
DRAWN: SRY APPROVED: CRS
SCALE: NTS

STATE OF ALASKA 24910 Charles R. Somerville CE-8845 REGISTERED PROFESSIONAL ENGINEER
DATE: 3/1/13

HAINES BOROUGH
PORT CHILKOOT DOCK RENOVATION

SHEET TITLE:
GANGWAY HINGE END DETAILS

PND PROJECT NO.: 112048.08 DWG. FILE: 4.07.DWG

P4.07
SHEET 39 OF 62

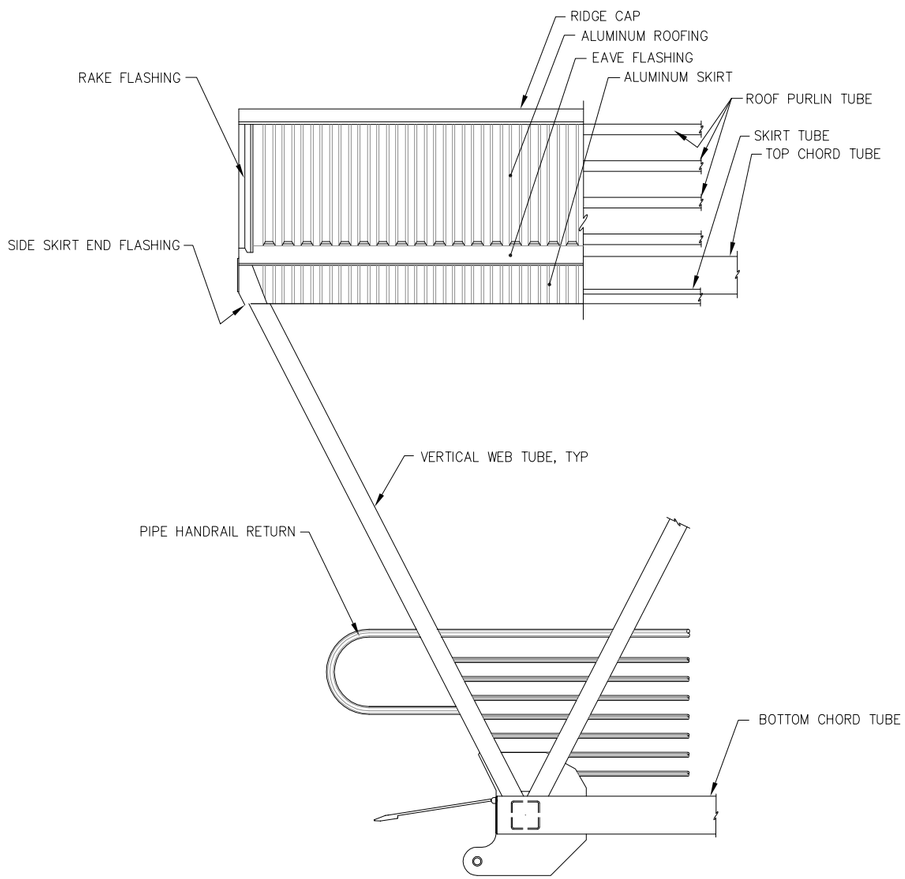

TYPICAL END ELEVATION

NOTE: SHORE END SHOWN; FLOAT END SIMILAR.

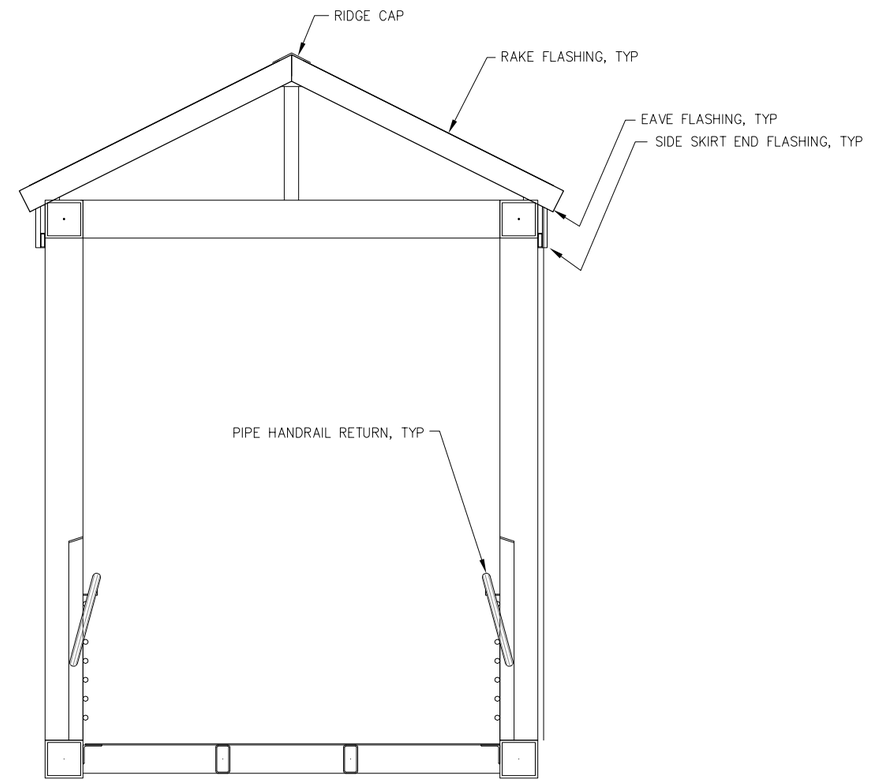

TYPICAL END VIEW

HAINES BOROUGH ALASKA

REVISIONS

REV.	DATE	DESCRIPTION	DWN.	CKD.	APP.

PND ENGINEERS, INC.
9360 Glacier Highway Ste 100
Juneau, Alaska 99801
Phone: 907-586-2093
Fax: 907-586-2099
www.pndengineers.com

DESIGN: SRY CHECKED: CRS
DRAWN: SRY APPROVED: CRS
SCALE: NTS

STATE OF ALASKA — Charles R. Somerville — CE-8845 — REGISTERED PROFESSIONAL ENGINEER
DATE: 3/1/13

HAINES BOROUGH
PORT CHILKOOT DOCK RENOVATION

SHEET TITLE:
GANGWAY END ELEVATIONS

PND PROJECT NO.: 112048.08 DWG. FILE: 4.08.DWG

P4.08

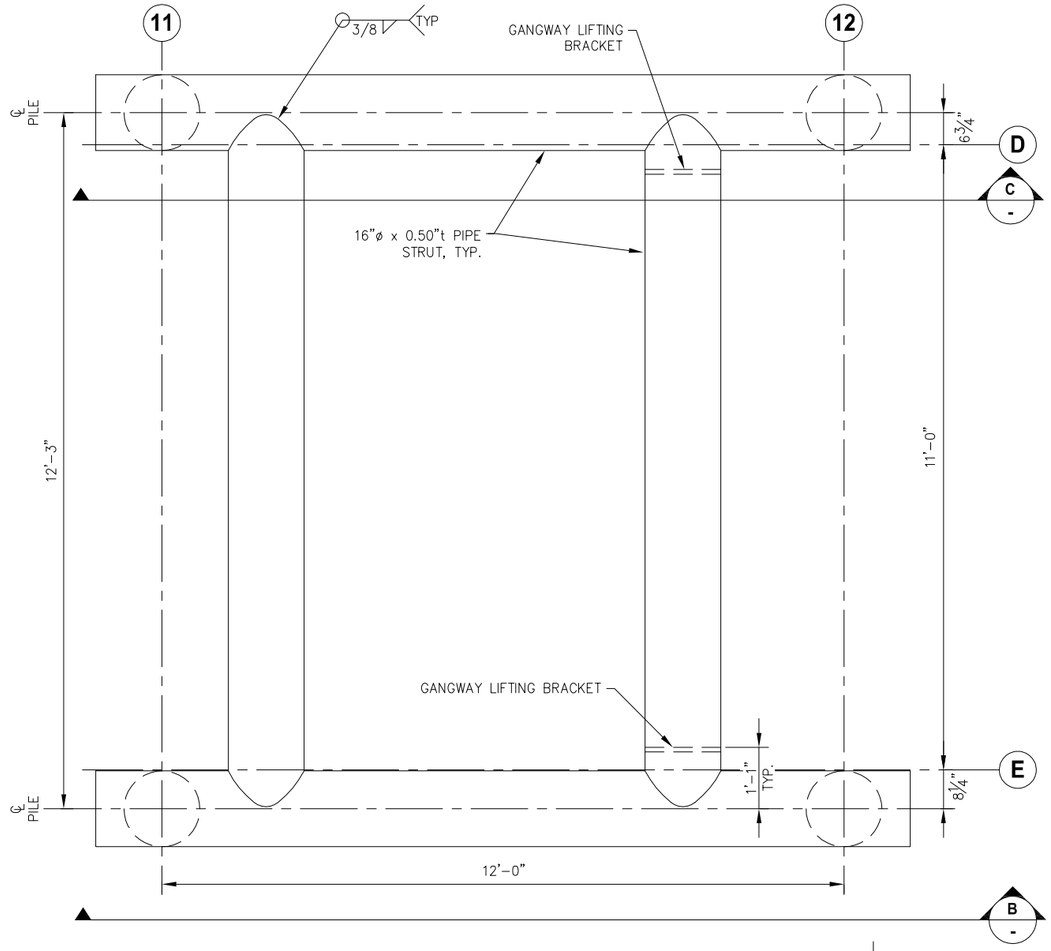

A P4.01 **PILE FRAME PLAN**

SCALE IN FEET 0 1 2 3

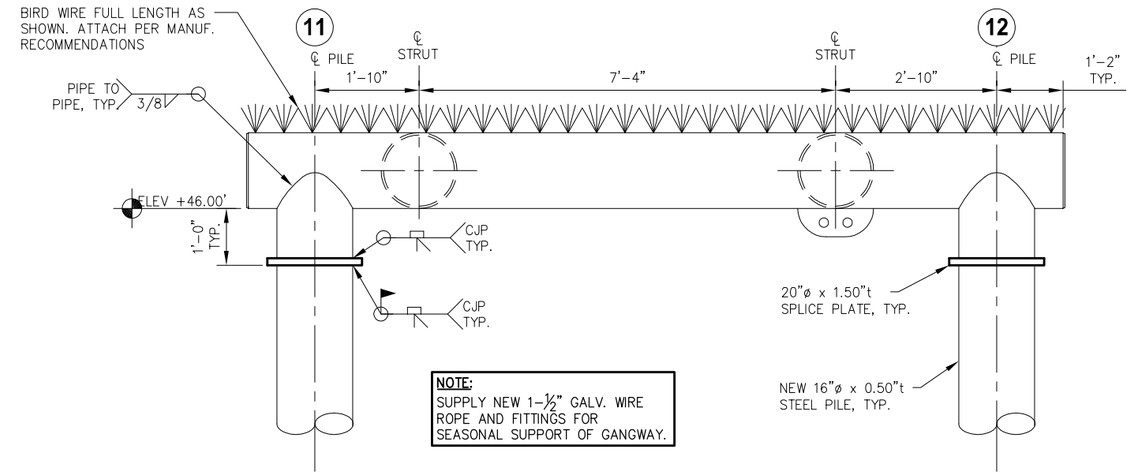

NOTE:
SUPPLY NEW 1-½" GALV. WIRE ROPE AND FITTINGS FOR SEASONAL SUPPORT OF GANGWAY.

B - **PILE FRAME ELEVATION**

SCALE IN FEET 0 1 2 3

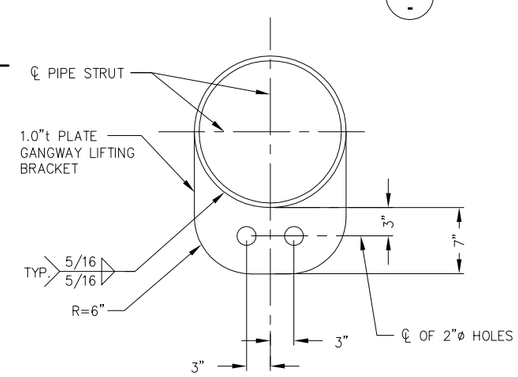

D - **LIFTING BRACKET DETAIL**
NTS

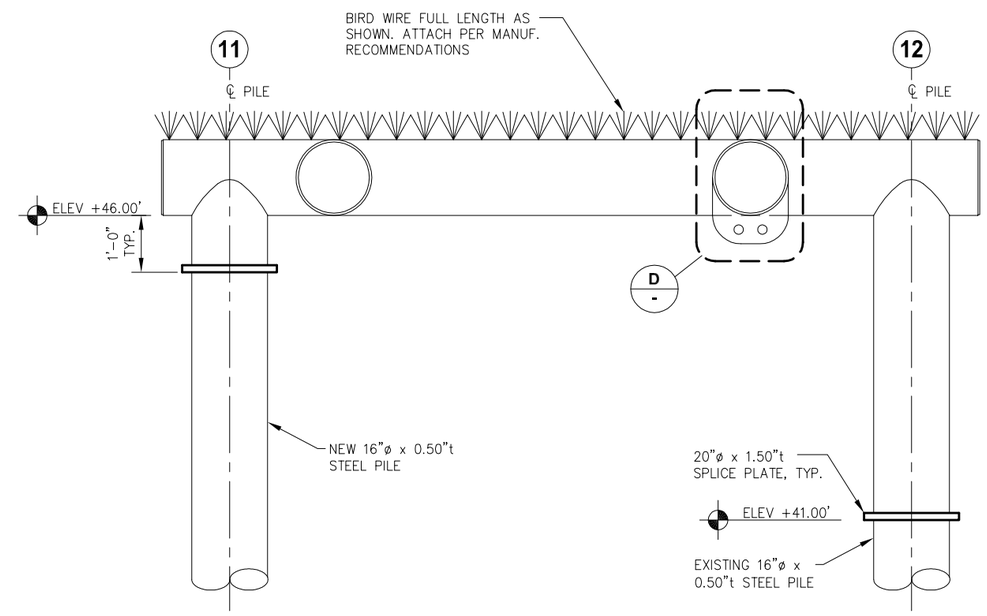

C - **PILE FRAME ELEVATION**

SCALE IN FEET 0 1 2 3

REVISIONS

REV.	DATE	DESCRIPTION	DWN.	CKD.	APP.

PND ENGINEERS, INC.
9360 Glacier Highway Ste 100
Juneau, Alaska 99801
Phone: 907-586-2093
Fax: 907-586-2099
www.pndengineers.com

DESIGN: SRY CHECKED: CRS
DRAWN: SRY APPROVED: CRS
SCALE: AS SHOWN

STATE OF ALASKA — Charles R. Somerville — CE-8845 — REGISTERED PROFESSIONAL ENGINEER
DATE: 3/1/13

HAINES BOROUGH
PORT CHILKOOT DOCK RENOVATION

SHEET TITLE: PILE FRAME DETAILS

P4.09

PND PROJECT NO.: 112048.08 DWG. FILE: 4.09.DWG

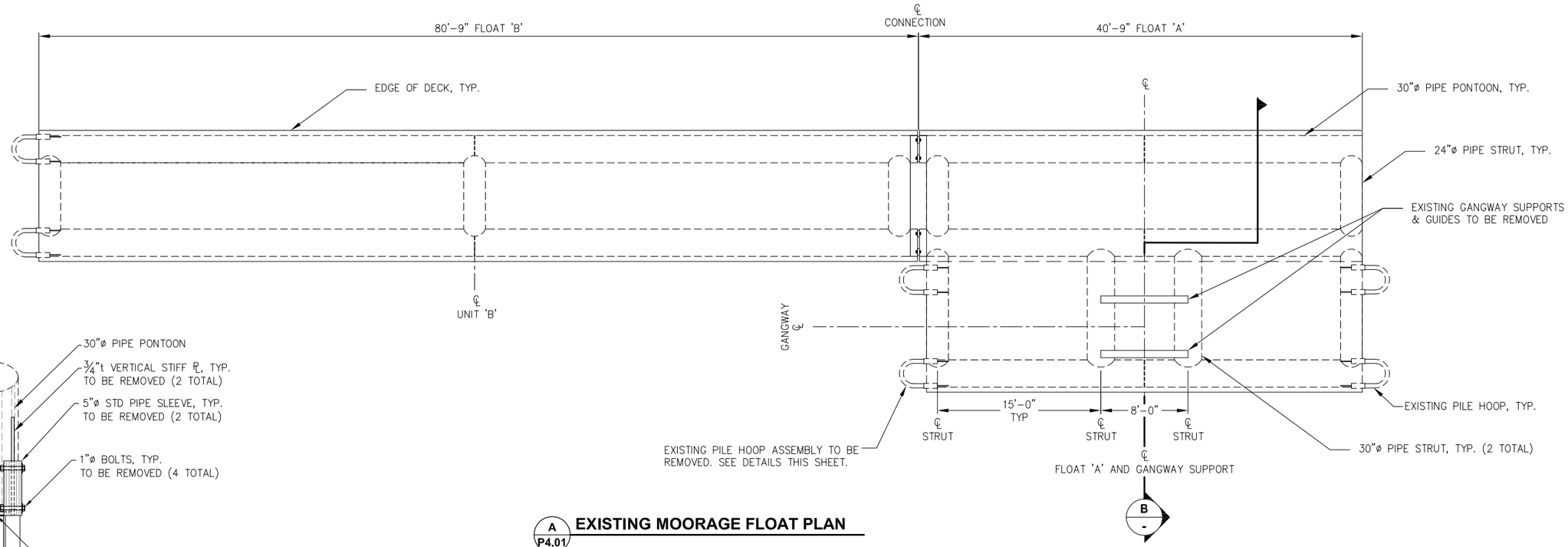

A P4.01 **EXISTING MOORAGE FLOAT PLAN**

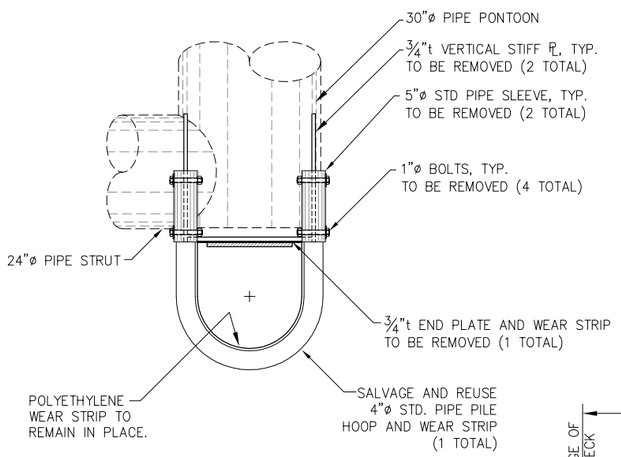

EXISTING PILE HOOP ASSEMBLY DEMOLITION DETAILS

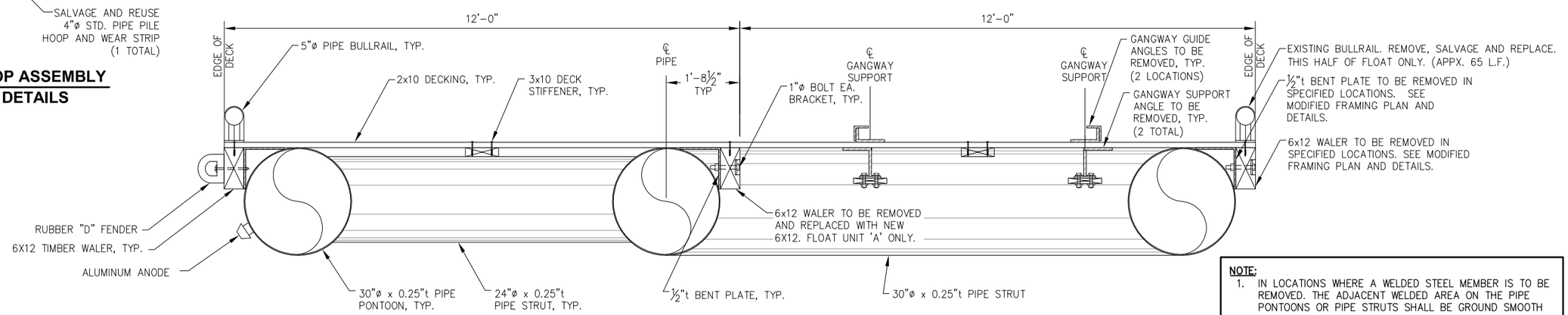

B - **EXISTING SECTION**

NOTE:

1. IN LOCATIONS WHERE A WELDED STEEL MEMBER IS TO BE REMOVED. THE ADJACENT WELDED AREA ON THE PIPE PONTOONS OR PIPE STRUTS SHALL BE GROUND SMOOTH TO INSURE PROPER FIT-UP OF NEW COMPONENTS. CONTRACTOR SHALL USE CARE NOT TO CUT INTO EXISTING PIPE PONTOON OR PIPE STRUTS.

HAINES BOROUGH ALASKA

REVISIONS

REV.	DATE	DESCRIPTION	DWN.	CKD.	APP.

PND ENGINEERS, INC.
9360 Glacier Highway Ste 100
Juneau, Alaska 99801
Phone: 907-586-2093
Fax: 907-586-2099
www.pndengineers.com

DESIGN: MLB CHECKED: JD/SY
DRAWN: PND APPROVED: CRS
SCALE: NTS

STATE OF ALASKA — Charles R. Sonneville — CE-8845 — REGISTERED PROFESSIONAL ENGINEER
DATE: 3/1/13

HAINES BOROUGH
PORT CHILKOOT DOCK RENOVATION

SHEET TITLE:
EXISTING MOORAGE FLOAT FRAMING PLAN AND SECTION

PND PROJECT NO.: 112048.08 DWG. FILE: 5.01.DWG

P5.01
SHEET 42 OF 62

NOTE:

1. REMOVE 2x10 DECKING AS NECESSARY TO INSTALL STEEL COMPONENTS AND BALLAST TANKS.
2. REINSTALL 2x10 DECKING USING 16d GALV. SPIRAL SHANK NAILS, TYP. DO NOT INSTALL SPIRAL SHANK NAILS IN ORIGINAL DECK HOLES, OFFSET TO MISS ORIGINAL HOLES.
3. CONTRACTOR TO PROVIDE NEW 2x10 DECKING AS NEEDED TO ACCOMMODATE DECK EXTENSION. DECK SPLICE JOINTS SHALL BE STAGGERED. SUBMIT DECK LAYOUT FOR ENGINEER APPROVAL.
4. NEW ½"t BENT PLATE BRACKETS FOR WALER/BALAST TANK CONNECTION TO PIPE PONTOON SHALL BE FIELD LOCATED AND INSTALLED. THE BRACKETS SHALL BE SPACED AT 4'-0" MAX. THERE SHALL BE A MINIMUM OF (4) BRACKETS ON EACH SIDE OF THE TYPE A BALLAST TANKS, AND A MINIMUM OF (2) BRACKETS ON EACH SIDE OF THE TYPE B BALLAST TANKS. BRACKET LOCATIONS TO BE APPROVED BY ENGINEER PRIOR TO WELDING.
5. CONTRACTOR MAY NEED TO RELOCATE EXISTING ½"t BENT PLATE BRACKETS TO MEET ABOVE CRITERIA.

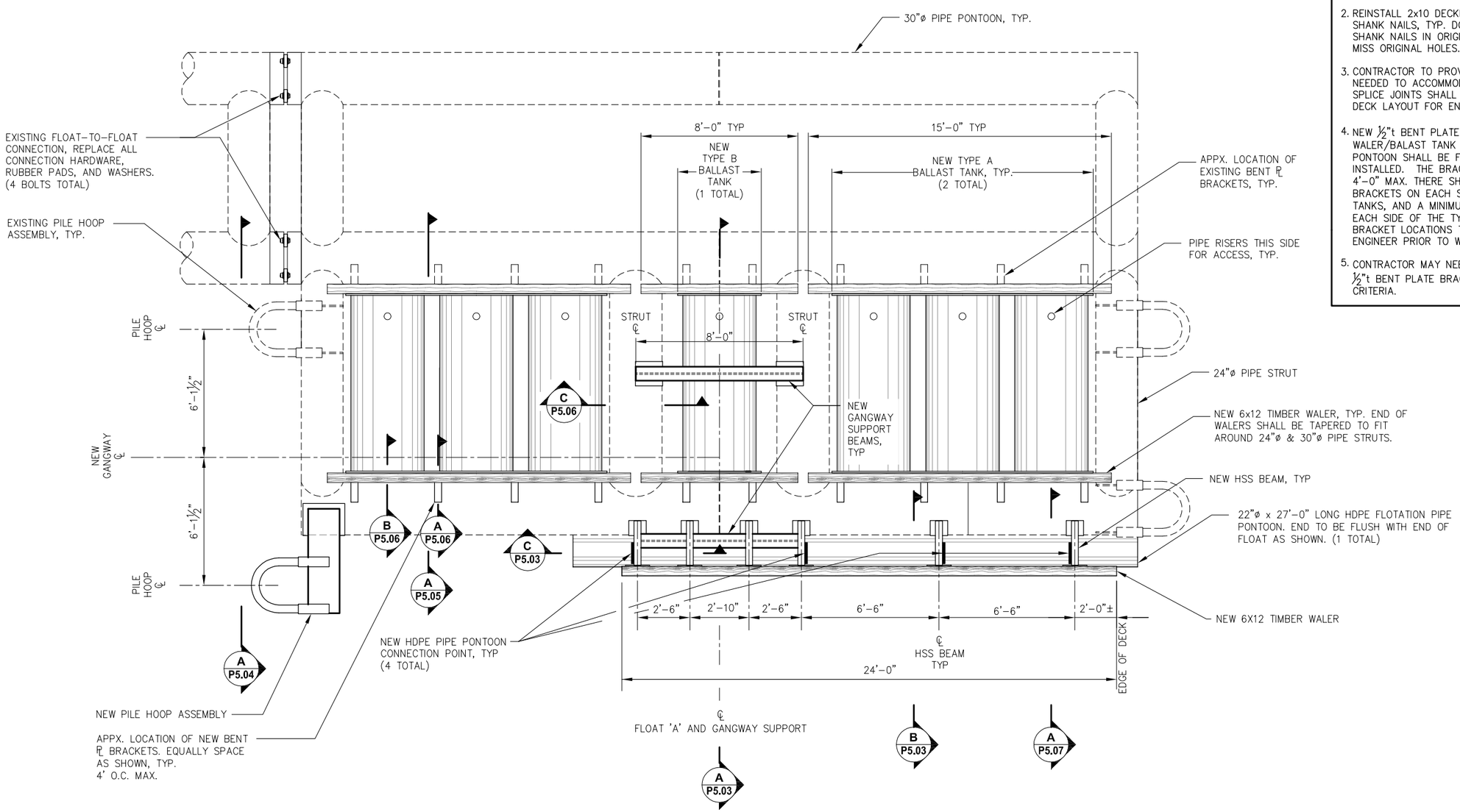

MODIFIED FRAMING PLAN

REVISIONS

REV.	DATE	DESCRIPTION	DWN.	CKD.	APP.

P N D ENGINEERS, INC.
9360 Glacier Highway Ste 100
Juneau, Alaska 99801
Phone: 907-586-2093
Fax: 907-586-2099
www.pndengineers.com

DESIGN: MLB CHECKED: JD/SY
DRAWN: PJD APPROVED: CRS
SCALE: NTS

STATE OF ALASKA — Charles R. Somerville — CE-8845 — REGISTERED PROFESSIONAL ENGINEER
DATE: 3/1/13

HAINES BOROUGH
PORT CHILKOOT DOCK RENOVATION

SHEET TITLE: FLOAT MODIFICATION PLAN

PND PROJECT NO.: 112048.08 DWG. FILE: 5.02.DWG

P5.02
SHEET 43 OF 62

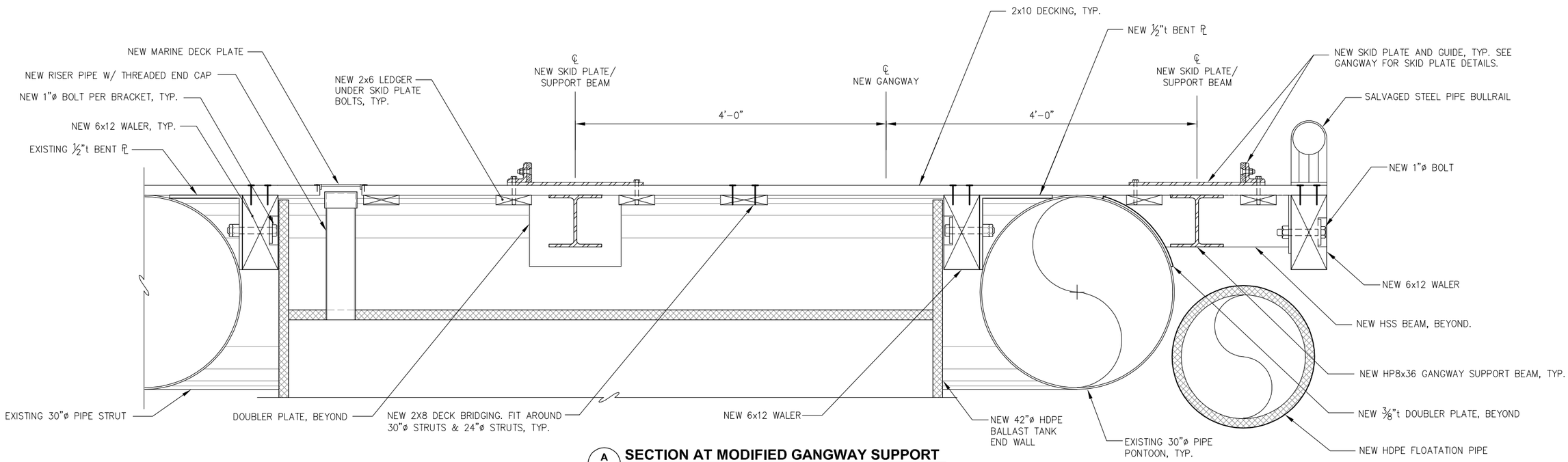

A P5.02 **SECTION AT MODIFIED GANGWAY SUPPORT**

NOTE:
1. ALL STEEL DOUBLER PLATES SHALL EXTEND 3" FROM THE OUTERMOST DIMENSIONS OF THE MEMBER CONNECTED TO DOUBLER PLATE, U.N.O., TYP.
2. ALL WELDS SHALL BE 5/16" FILLET WELDS, ALL AROUND, U.N.O.

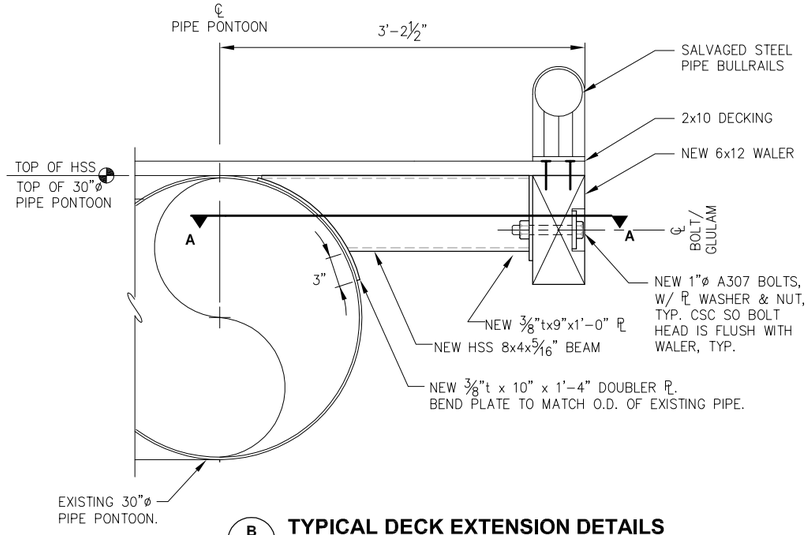

B P5.02 **TYPICAL DECK EXTENSION DETAILS**
NEW HDPE FLOATATION PIPE NOT SHOWN FOR CLARITY.

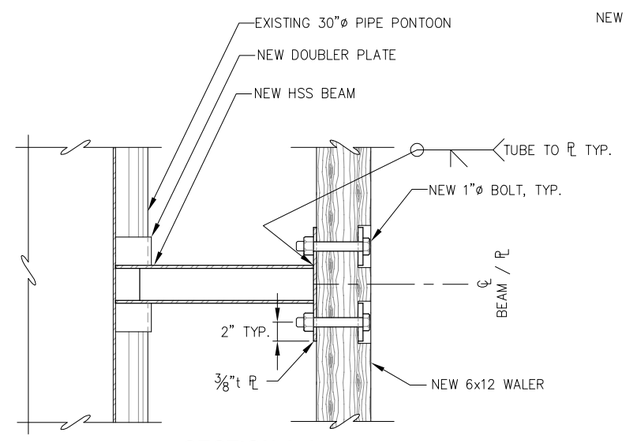

SECTION A-A

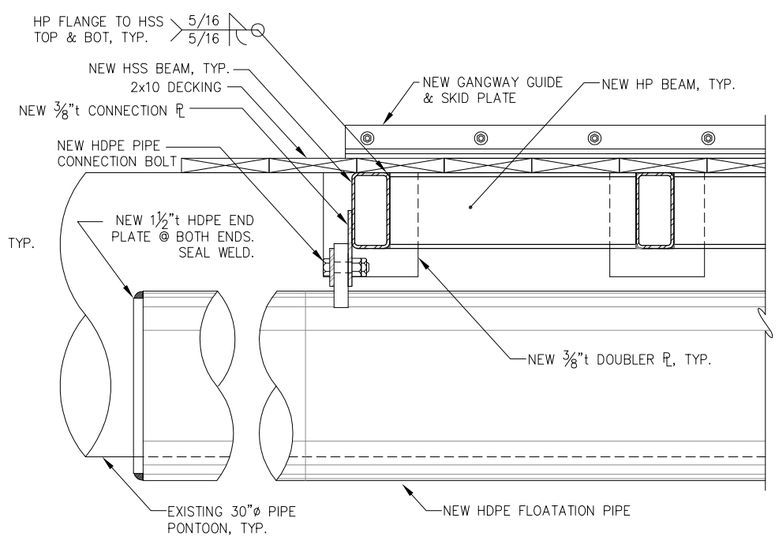

C P5.02 **SECTION AT HSS BEAM**

HAINES BOROUGH ALASKA

REVISIONS

REV.	DATE	DESCRIPTION	DWN.	CKD.	APP.

PND ENGINEERS, INC.
9360 Glacier Highway Ste 100
Juneau, Alaska 99801
Phone: 907-586-2093
Fax: 907-586-2099
www.pndengineers.com

DESIGN: MLB CHECKED: JD/SY
DRAWN: PND APPROVED: CRS
SCALE: NTS

STATE OF ALASKA — Charles R. Somerville — CE-8845 — REGISTERED PROFESSIONAL ENGINEER
DATE: 3/1/13

HAINES BOROUGH
PORT CHILKOOT DOCK RENOVATION

SHEET TITLE:
MOORAGE FLOAT DOCK DETAILS

PND PROJECT NO.: 112048.08 DWG. FILE: 5.03.DWG

P5.03
SHEET 44 OF 62

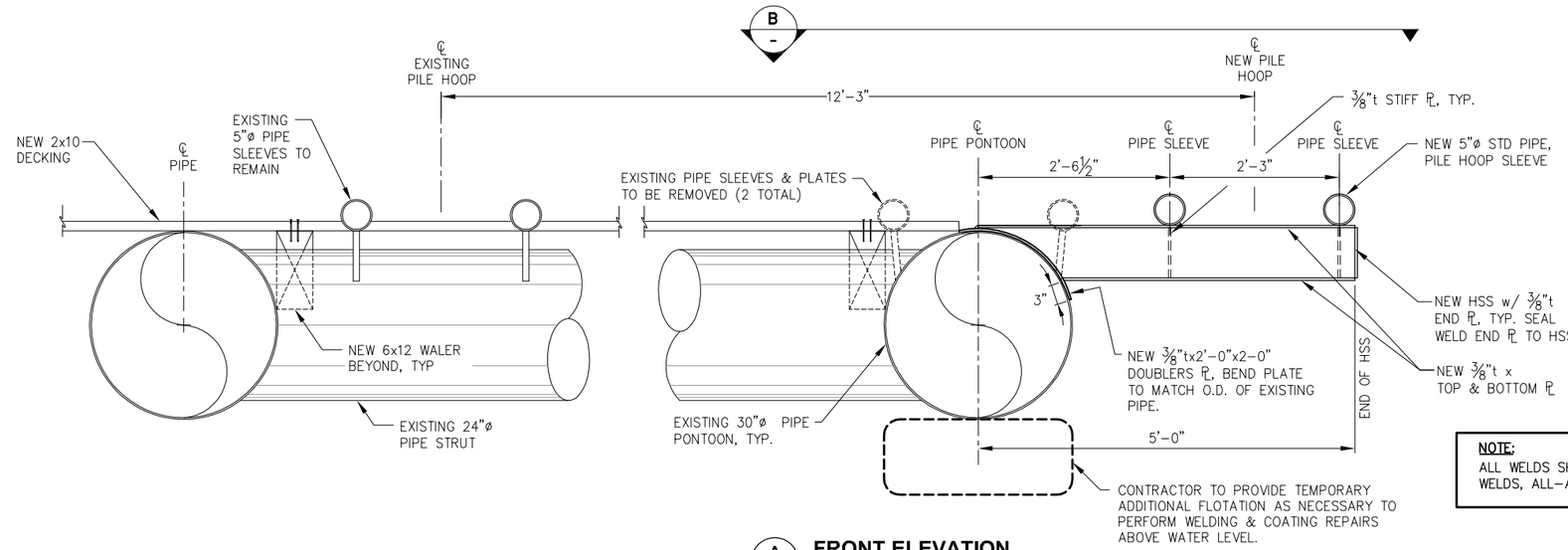

NOTE:
ALL WELDS SHALL BE 5/16" FILLET WELDS, ALL-AROUND, UNO.

A P5.02 **FRONT ELEVATION**

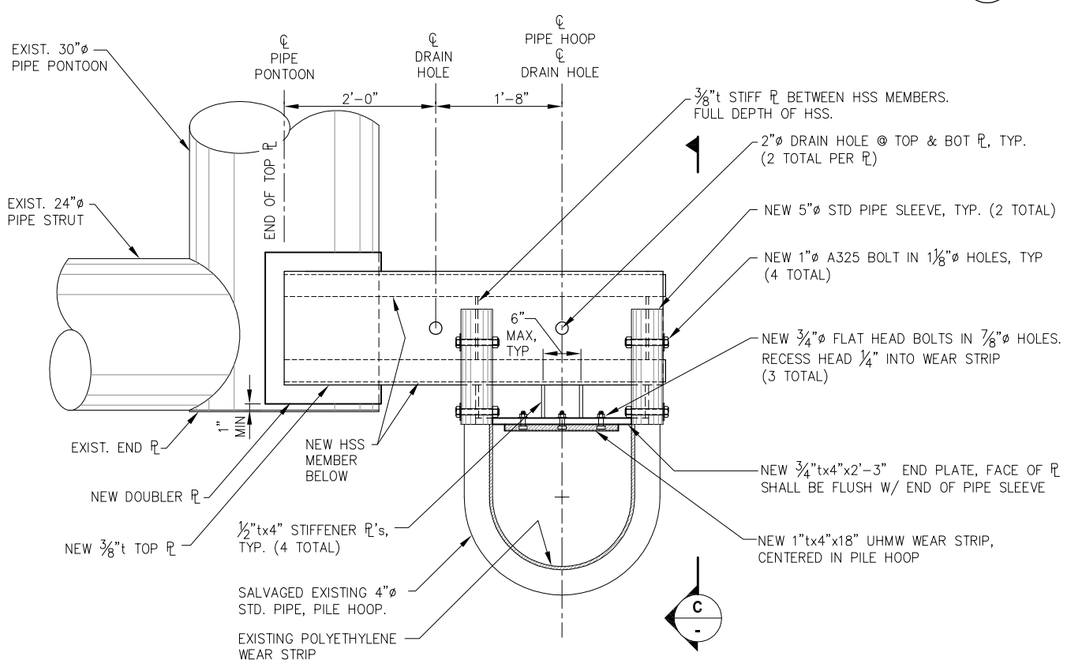

B - **NEW PILE HOOP ASSEMBLY-PLAN**

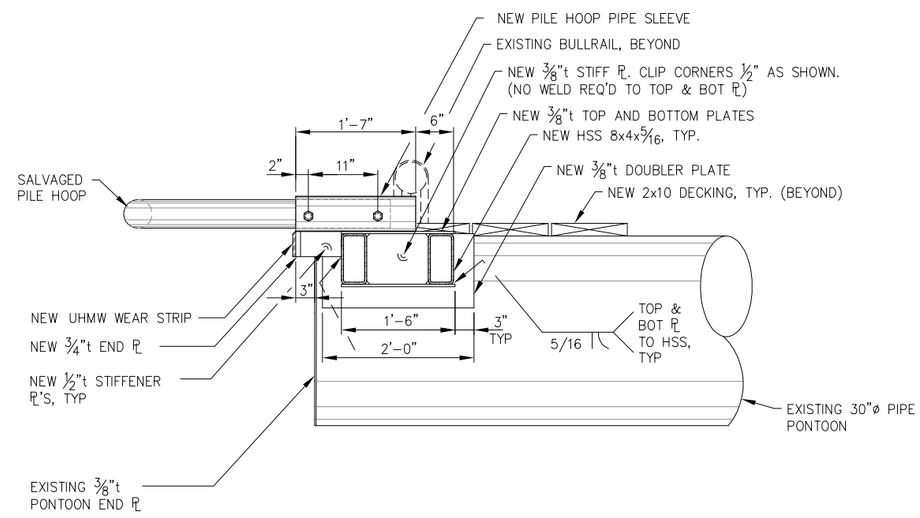

C - **SIDE ELEVATION**

REVISIONS

REV.	DATE	DESCRIPTION	DWN.	CKD.	APP.

PND ENGINEERS, INC.
9360 Glacier Highway Ste 100
Juneau, Alaska 99801
Phone: 907-586-2093
Fax: 907-586-2099
www.pndengineers.com

DESIGN: MLB CHECKED: JD/SY
DRAWN: PND APPROVED: CRS
SCALE: NTS

STATE OF ALASKA — Charles R. Somerville — CE-8845 — REGISTERED PROFESSIONAL ENGINEER
DATE: 3/1/13

HAINES BOROUGH
PORT CHILKOOT DOCK RENOVATION

SHEET TITLE:
MOORAGE FLOAT DETAILS

PND PROJECT NO.: 112048.08 DWG. FILE: 5.04.DWG

P5.04
SHEET 45 OF 62

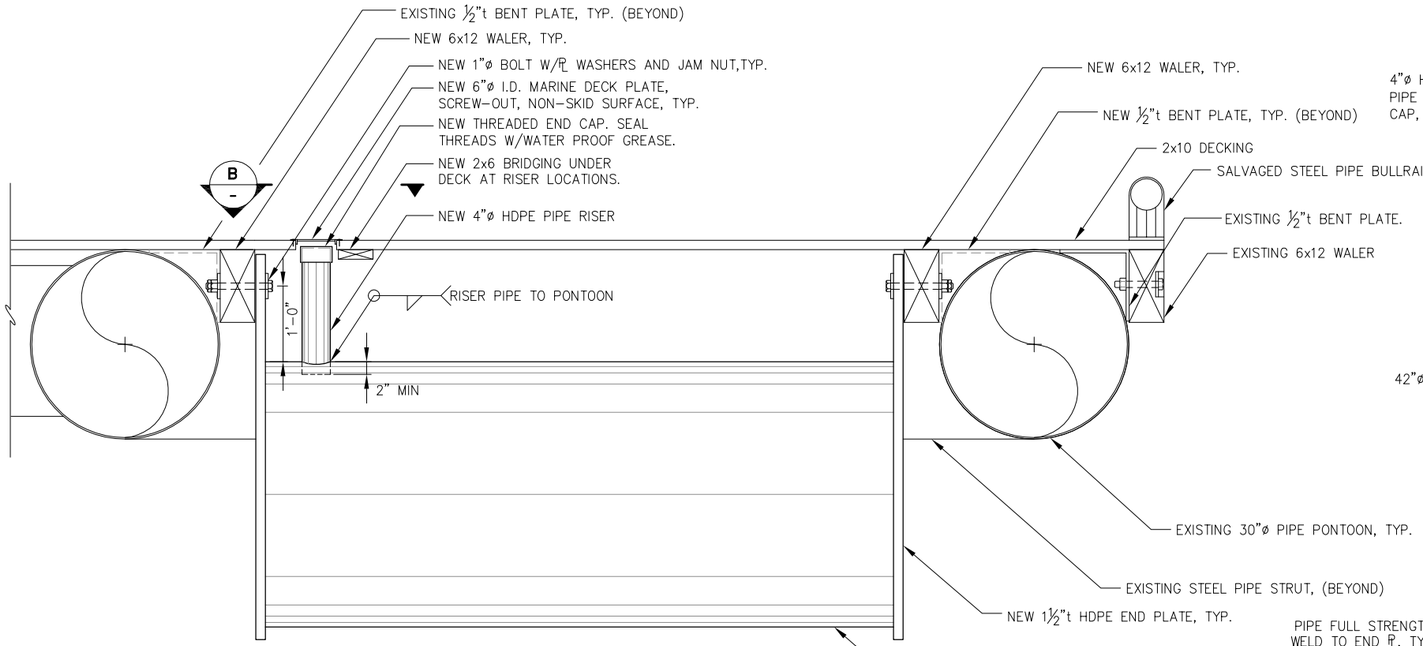

A P5.02 **BALLAST TANK ELEVATION**

NOTE:
1. THE HOLES IN THE HDPE END WALLS AND NEW TIMBER WALERS SHALL BE FIELD DRILLED TO PREVENT BOLT-UP CONFLICTS WITH BENT PLATE BRACKETS (NEW OR EXISTING).

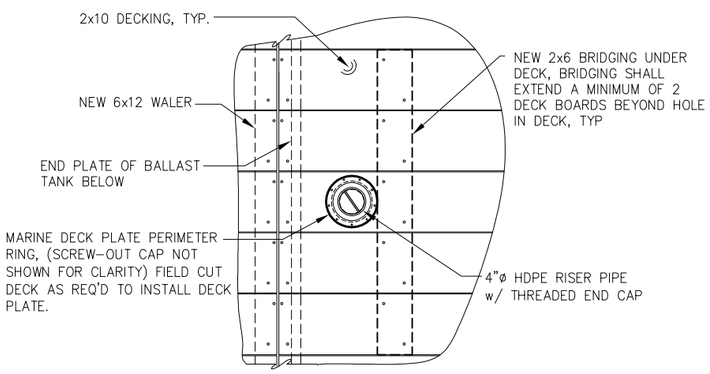

B - **RISER PIPE PLAN**

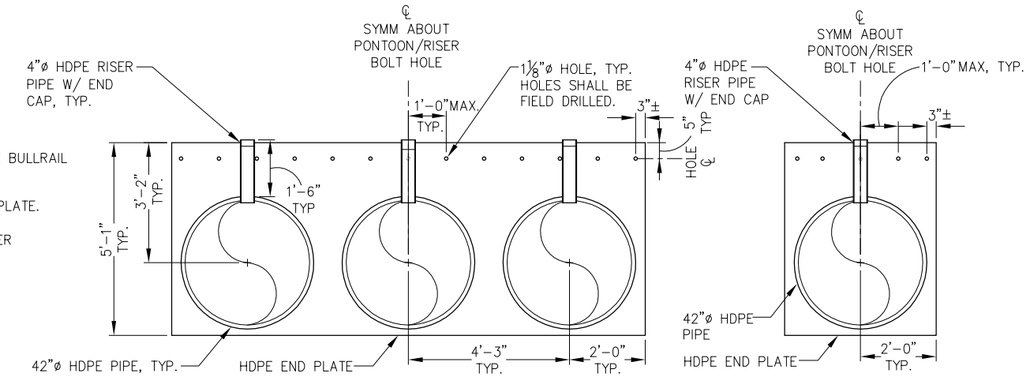

SECTION SECTION

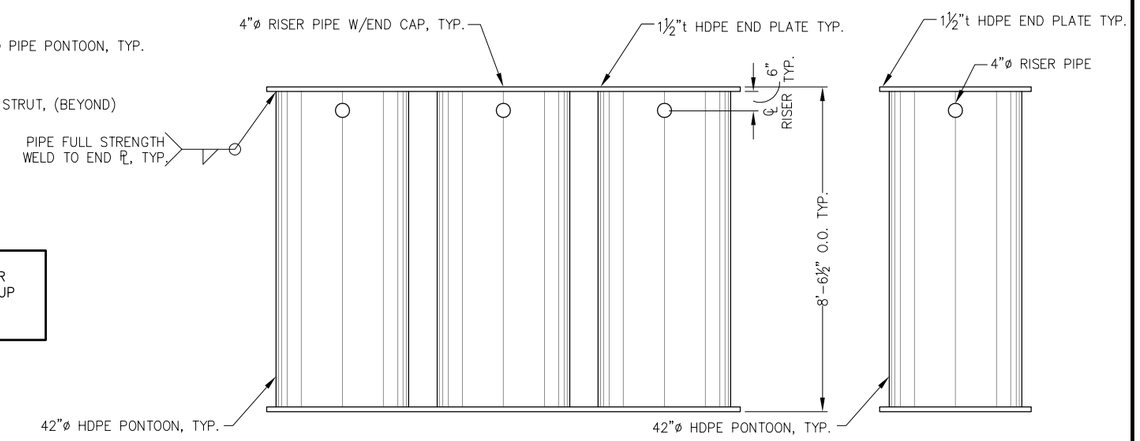

PLAN PLAN

TYPE A BALLAST TANK
(2 REQUIRED)

TYPE B BALLAST TANK
NOTE: DETAILS NOT SHOWN SIMILAR TO TYPE A BALLAST TANK.
(1 REQUIRED)

REVISIONS

REV.	DATE	DESCRIPTION	DWN.	CKD.	APP.

P N D ENGINEERS, INC.
9360 Glacier Highway Ste 100
Juneau, Alaska 99801
Phone: 907-586-2093
Fax: 907-586-2099
www.pndengineers.com

DESIGN: MLB CHECKED: JD/SY
DRAWN: PND APPROVED: CRS
SCALE: NTS
DATE: 3/1/13

STATE OF ALASKA — Charles R. Somerville — CE-8845 — REGISTERED PROFESSIONAL ENGINEER

HAINES BOROUGH
PORT CHILKOOT DOCK RENOVATION

SHEET TITLE:
MOORAGE FLOAT DETAILS

PND PROJECT NO.: 112048.08 DWG. FILE: 5.05.DWG

P5.05
SHEET 46 OF 62

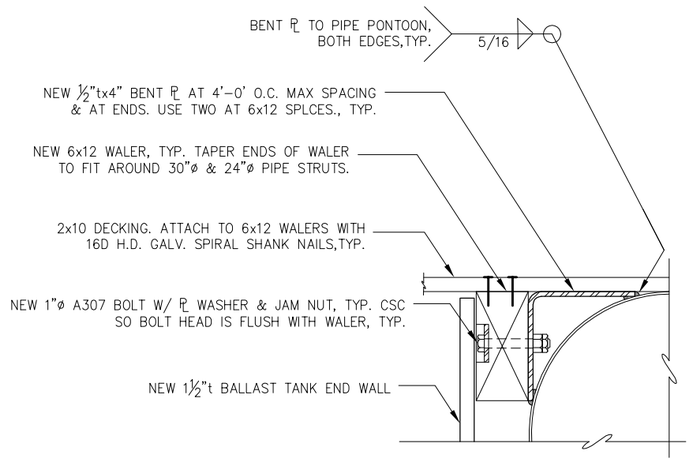

A / P5.02 WALER-TO-BENT PLATE CONNECTION DETAILS

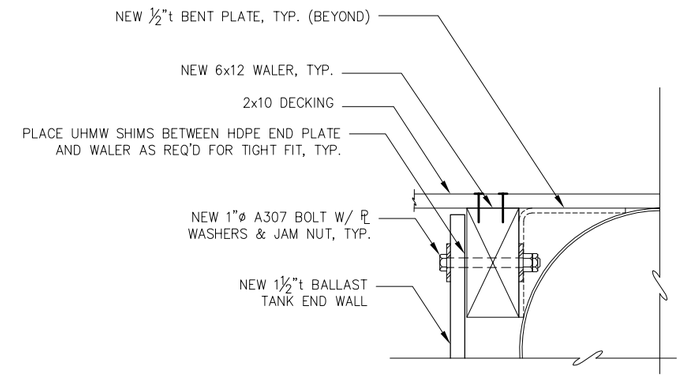

B / P5.02 BALLAST TANK-TO-WALER CONNECTION DETAILS

NOTE:
1. ALL BALLAST TANK CONNECTION BOLTS TO BE SNUG-TIGHTENED W/JAM NUT TO PREVENT LOOSING.

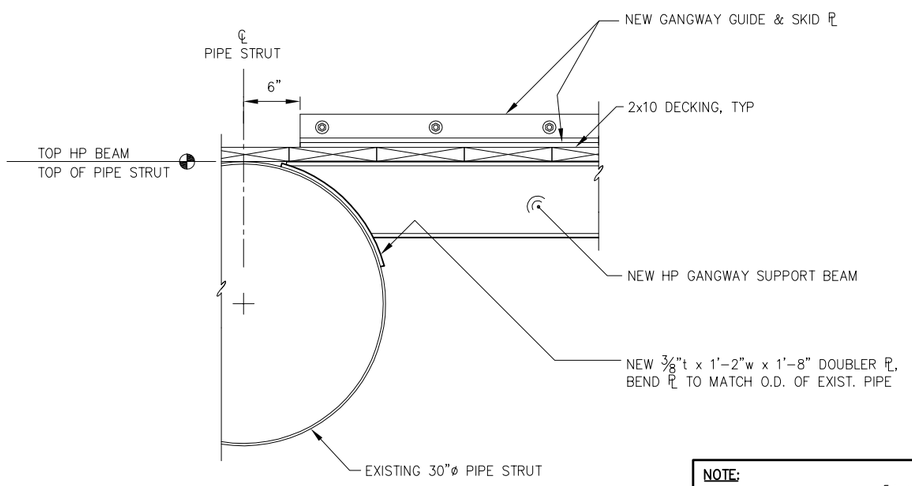

C / P5.02 GANGWAY SUPPORT BEAM CONNECTION
(2 LOCATIONS TOTAL)

NOTE:
1. ALL WELDS SHALL BE 5/16" FILLET WELDS, ALL-AROUND, UNO.

REVISIONS

REV.	DATE	DESCRIPTION	DWN.	CKD.	APP.

PND ENGINEERS, INC.
9360 Glacier Highway Ste 100
Juneau, Alaska 99801
Phone: 907-586-2093
Fax: 907-586-2099
www.pndengineers.com

DESIGN: MLB CHECKED: JD/SY
DRAWN: PND APPROVED: CRS
SCALE: NTS
DATE: 3/1/13

STATE OF ALASKA — Charles R. Somerville — CE-8845 — REGISTERED PROFESSIONAL ENGINEER

HAINES BOROUGH
PORT CHILKOOT DOCK RENOVATION

SHEET TITLE: MOORAGE FLOAT DETAILS

PND PROJECT NO.: 112048.08 DWG. FILE: 5.06.DWG

P5.06
SHEET 47 OF 62

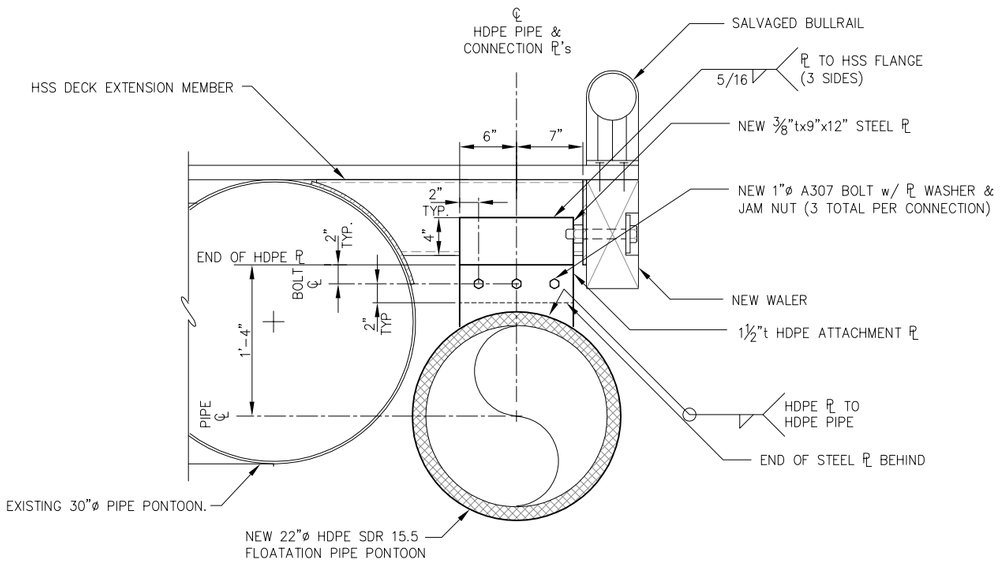

A P5.02 **22"Ø HDPE FLOATATION PIPE PONTOON CONNECTION DETAIL**

REPLACE IN KIND	
COMPONENT	QTY
1½"ø A325 BOLT W/ NUT & WASHERS (GALV)	4
4"øx ⅜"t RUBBER WASHER W/ 1 9/16"ø HOLE	8
2"tx7½"x7½" RUBBER PAD W/ 1 9/16"ø HOLE (60 DURO)	4

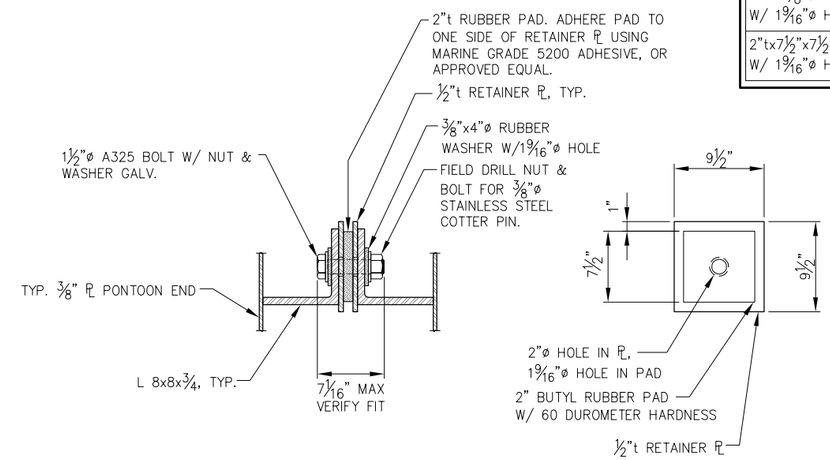

FLOAT CONNECTION REPLACEMENT COMPONENTS

NOTE: SNUG-TIGHTEN BOLT SO THAT THE RUBBER IS SLIGHTLY COMPRESSED. THE NUT SHALL BE LOCKED WITH A COTTER PIN.

(4 REQUIRED)

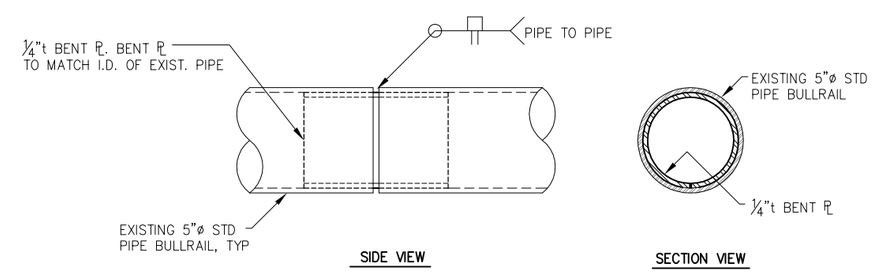

BULLRAIL MODIFICATION DETAIL

NOTE: REDUCE LENGTH OF SALVAGED BULLRAILS AS NEEDED TO FIT ALONG MODIFIED PERIMETER OF FLOAT.

REVISIONS

REV.	DATE	DESCRIPTION	DWN.	CKD.	APP.

P N D ENGINEERS, INC.
9360 Glacier Highway Ste 100
Juneau, Alaska 99801
Phone: 907-586-2093
Fax: 907-586-2099
www.pndengineers.com

DESIGN: MLB CHECKED: JD/SY
DRAWN: PND APPROVED: CRS
SCALE: NTS
DATE: 3/1/13

STATE OF ALASKA 24910 Charles R. Somerville CE-8845 REGISTERED PROFESSIONAL ENGINEER

HAINES BOROUGH
PORT CHILKOOT DOCK RENOVATION

SHEET TITLE: MOORAGE FLOAT DETAILS

PND PROJECT NO.: 112048.08 DWG. FILE: 5.07.DWG

P5.07
SHEET 48 OF 62

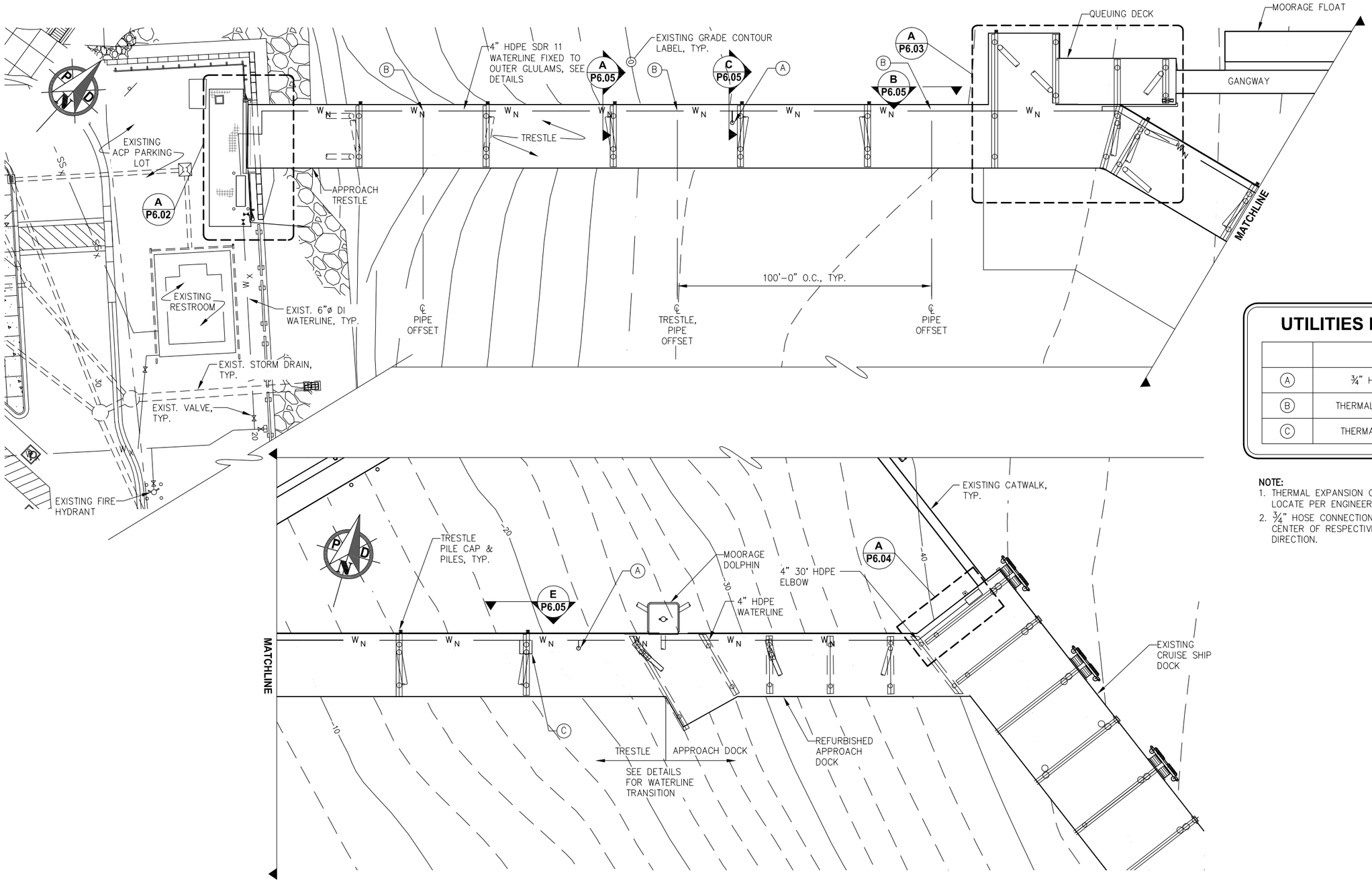

UTILITIES EQUIPMENT TABLE

	UTILITY	QUANTITY
A	¾" HOSE CONNECTION	(2)
B	THERMAL EXPANSION OFFSET	(3)
C	THERMAL EXPANSION LOOP	(1)

NOTE:
1. THERMAL EXPANSION OFFSETS & LOOP SHOWN APPROXIMATE, LOCATE PER ENGINEER DIRECTION 100' O.C. MAX
2. ¾" HOSE CONNECTIONS SHOWN APPROXIMATE. LOCATE @ CENTER OF RESPECTIVE TRESTLE SECTIONS, PER OWNER DIRECTION.

A - **WATER SYSTEM SITE PLAN**

REVISIONS

REV.	DATE	DESCRIPTION	DWN.	CKD.	APP.

PND ENGINEERS, INC.
9360 Glacier Highway Ste 100
Juneau, Alaska 99801
Phone: 907-586-2093
Fax: 907-586-2099
www.pndengineers.com

DESIGN: LBM CHECKED: TCB
DRAWN: LBM APPROVED: CRS
SCALE: SCALE IN FEET 0 20 40 FT.

STATE OF ALASKA — Charles R. Somerville — CE-8845 — REGISTERED PROFESSIONAL ENGINEER
DATE: 3/1/13

HAINES BOROUGH
PORT CHILKOOT DOCK RENOVATION

SHEET TITLE: WATER SYSTEM PLAN AND LAYOUT

P6.01

PND PROJECT NO.: 112048.08 DWG. FILE: P6.01.DWG

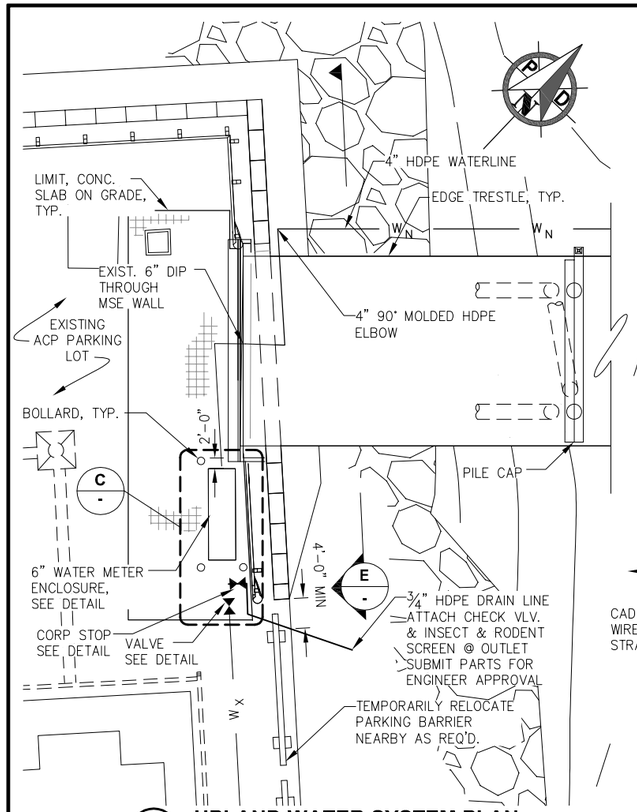

A P6.01 **UPLAND WATER SYSTEM PLAN**

NOTE:
WATERLINE SHOWN SCHEMATICALLY, SEE DETAILS.

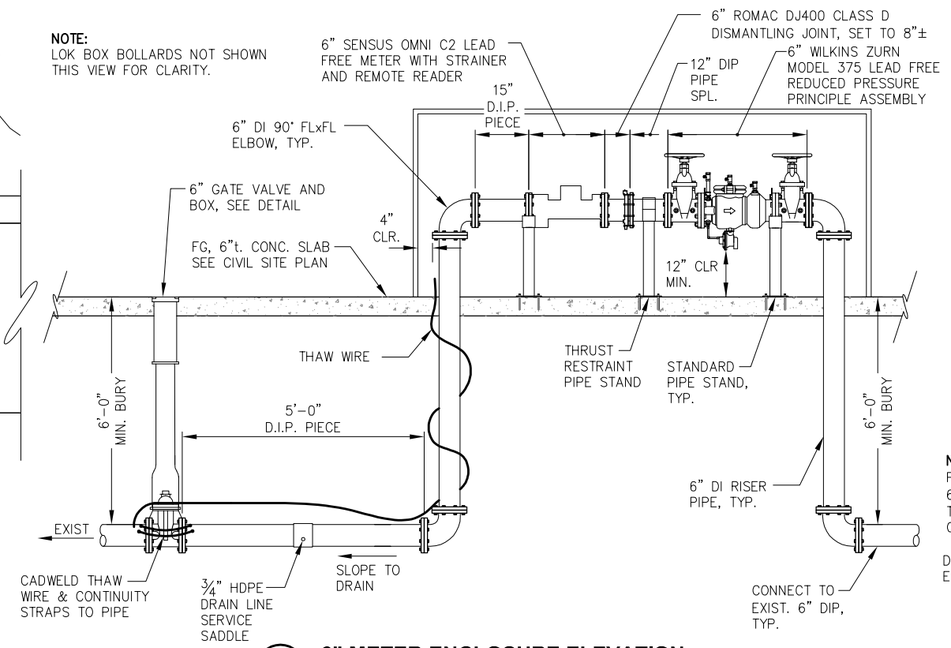

B - **6" METER ENCLOSURE ELEVATION**

NOTE:
INSTALL #2 AWG w/ THW INSULATION THAW WIRE & CONTINUITY STRAPS AS SHOWN. PROVIDE 12" MIN. WIRE TAIL ABOVE CONC. SLAB IN ENCLOSURE.

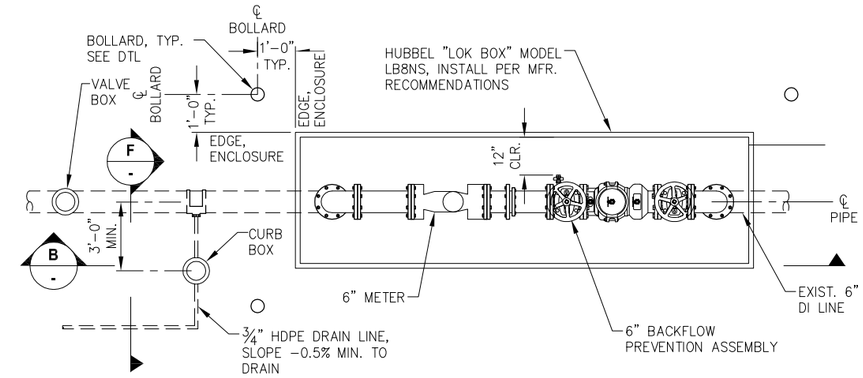

C - **6" METER ENCLOSURE PLAN**

NOTE:
PROVIDE (1) ADDITIONAL 6" BLIND FLANGE W/O TAP FOR WINTERIZATION OF WATERLINE

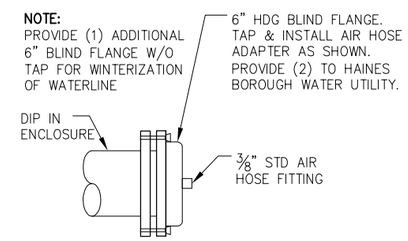

D - **BLOW OFF DETAIL**

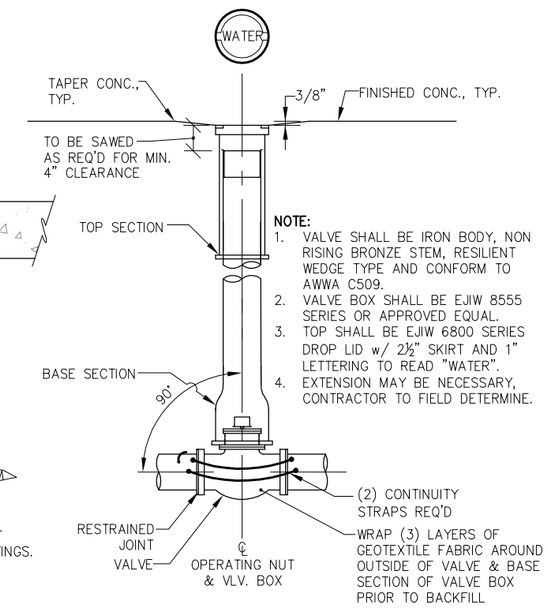

NOTE:
1. VALVE SHALL BE IRON BODY, NON RISING BRONZE STEM, RESILIENT WEDGE TYPE AND CONFORM TO AWWA C509.
2. VALVE BOX SHALL BE EJIW 8555 SERIES OR APPROVED EQUAL.
3. TOP SHALL BE EJIW 6800 SERIES DROP LID w/ 2½" SKIRT AND 1" LETTERING TO READ "WATER".
4. EXTENSION MAY BE NECESSARY, CONTRACTOR TO FIELD DETERMINE.

G - **GATE VALVE DETAIL**

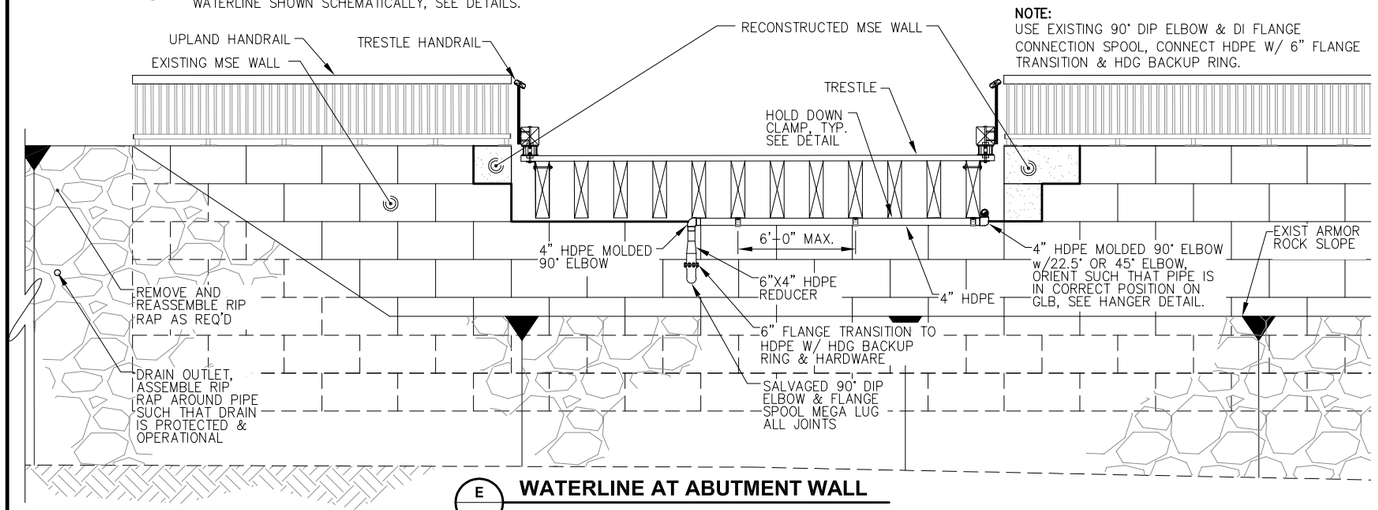

NOTE:
USE EXISTING 90° DIP ELBOW & DI FLANGE CONNECTION SPOOL, CONNECT HDPE W/ 6" FLANGE TRANSITION & HDG BACKUP RING.

E - **WATERLINE AT ABUTMENT WALL**

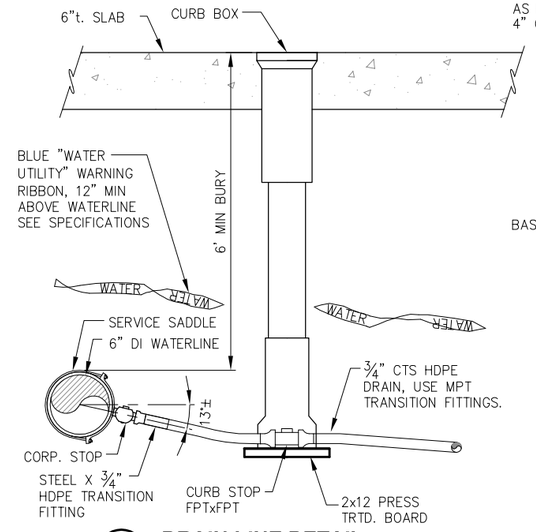

F - **DRAIN LINE DETAIL**

REVISIONS

REV.	DATE	DESCRIPTION	DWN.	CKD.	APP.

P N D ENGINEERS, INC.
9360 Glacier Highway Ste 100
Juneau, Alaska 99801
Phone: 907-586-2093
Fax: 907-586-2099
www.pndengineers.com

DESIGN: LBM CHECKED: TCB
DRAWN: LBM APPROVED: CRS
SCALE: NTS

STATE OF ALASKA — Charles R. Somerville — CE-8845 — REGISTERED PROFESSIONAL ENGINEER
DATE: 3/1/13

HAINES BOROUGH
PORT CHILKOOT DOCK RENOVATION

SHEET TITLE:
WATER SERVICE UPLANDS PLAN AND DETAILS

PND PROJECT NO.: 112048.08 DWG. FILE: P6.02.DWG

P6.02
SHEET 50 OF 62

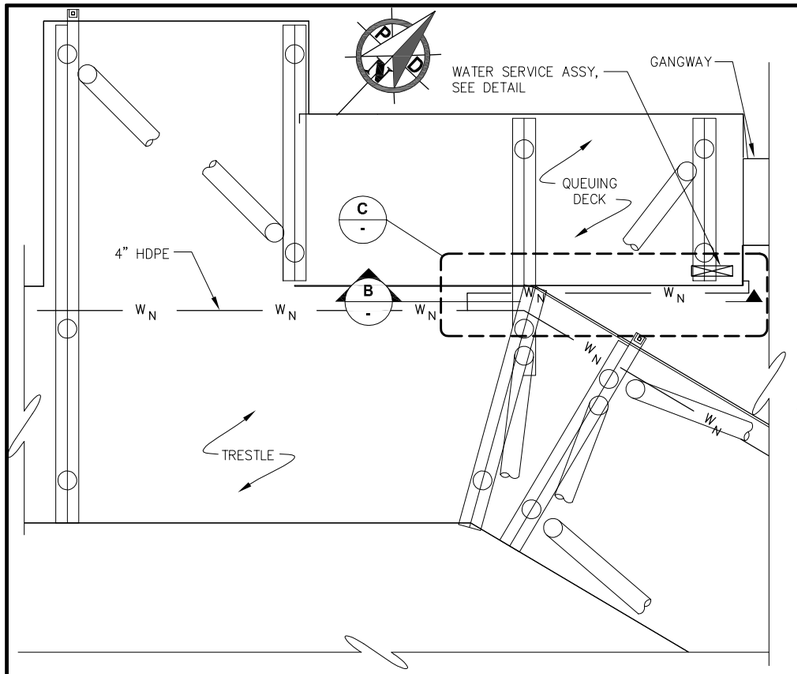

A P6.01 **QUEUING DECK WATERLINE PLAN**

NOTE:
WATERLINE SHOWN SCHEMATICALLY, SEE DETAILS.

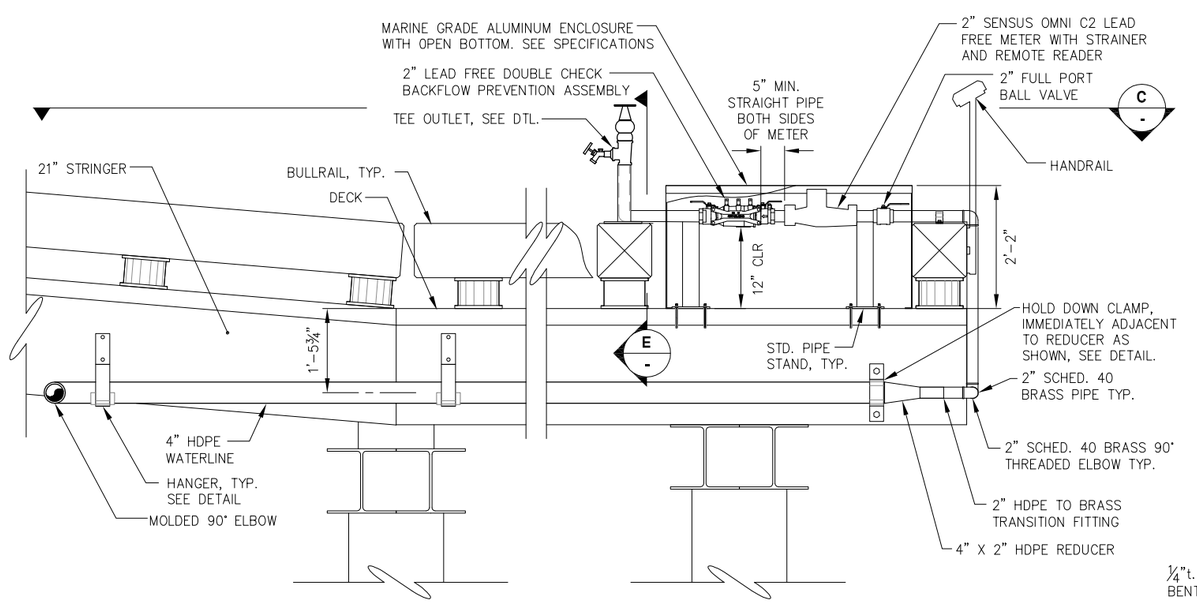

B - **WATER SERVICE ASSEMBLY ELEVATION**

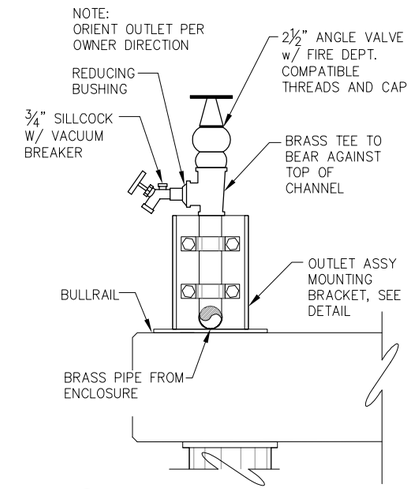

E - **TEE OUTLET DETAIL**

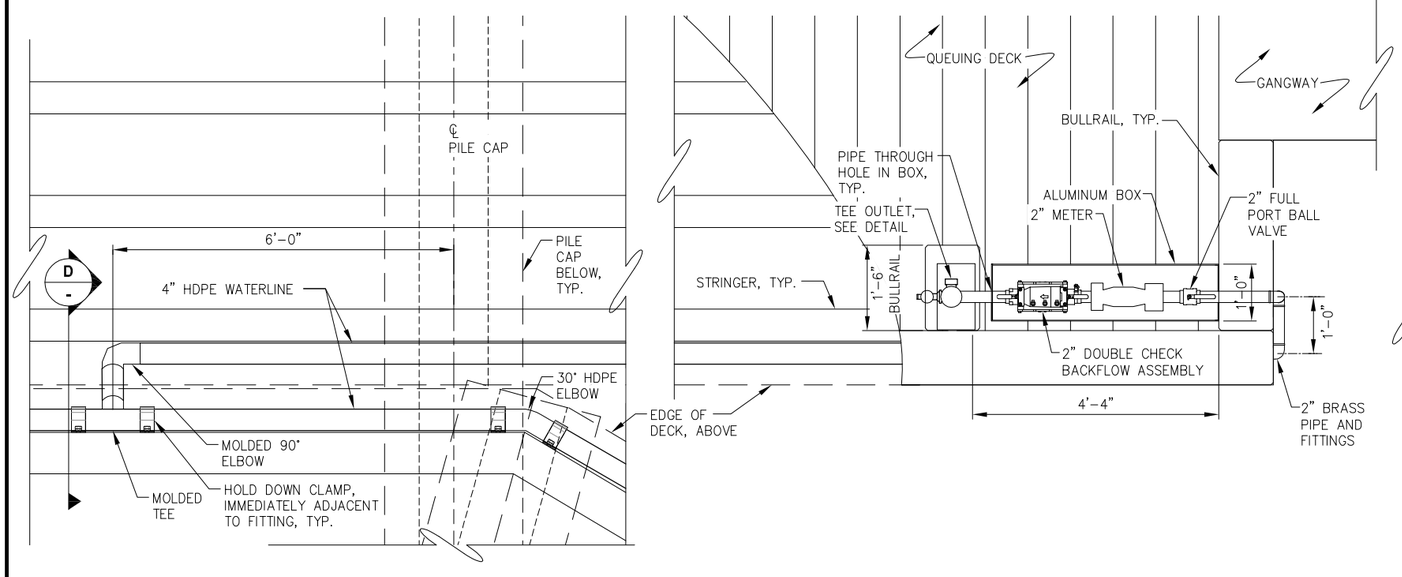

C - **WATER SERVICE ASSEMBLY PLAN**

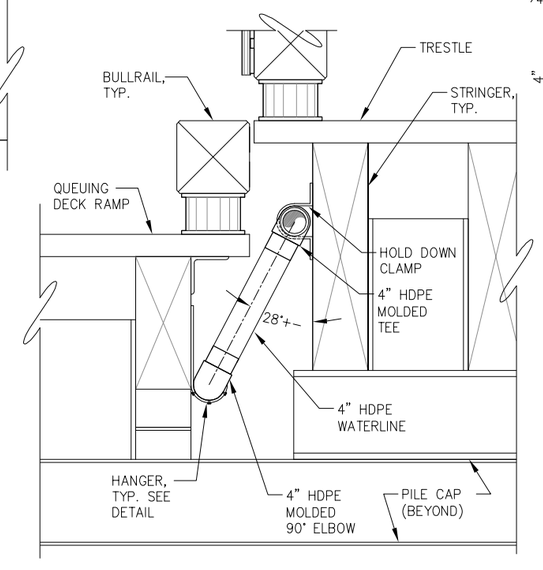

D - **WATER SERVICE TEE ELEVATION**

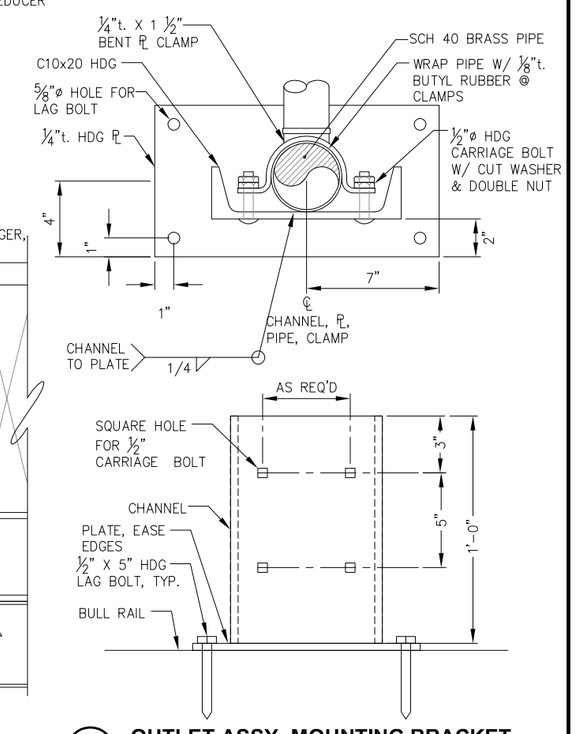

F - **OUTLET ASSY. MOUNTING BRACKET**

HAINES BOROUGH ALASKA

REVISIONS

REV.	DATE	DESCRIPTION	DWN.	CKD.	APP.

PND ENGINEERS, INC.
9360 Glacier Highway Ste 100
Juneau, Alaska 99801
Phone: 907-586-2093
Fax: 907-586-2099
www.pndengineers.com

DESIGN: LBM CHECKED: TCB
DRAWN: LBM APPROVED: CRS
SCALE: NTS

STATE OF ALASKA — Charles R. Somerville — CE-8845 — REGISTERED PROFESSIONAL ENGINEER
DATE: 3/1/13

HAINES BOROUGH
PORT CHILKOOT DOCK RENOVATION

SHEET TITLE:
WATER SERVICE AT QUEUING DECK AND WATER SYTSTEM DETAILS

PND PROJECT NO.: 112048.08 DWG. FILE: 6.03.DWG

P6.03
SHEET 51 OF 62

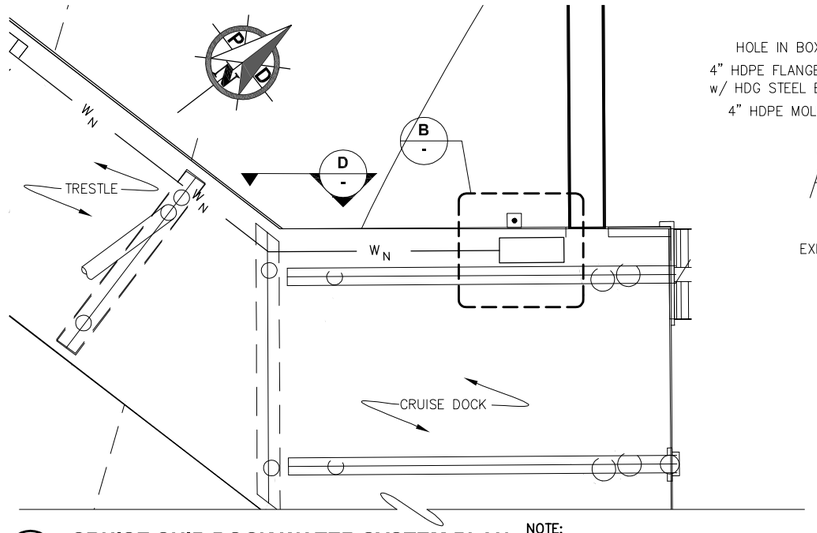

A P6.01 **CRUISE SHIP DOCK WATER SYSTEM PLAN**

NOTE: WATERLINE SHOWN SCHEMATICALLY, SEE DETAILS.

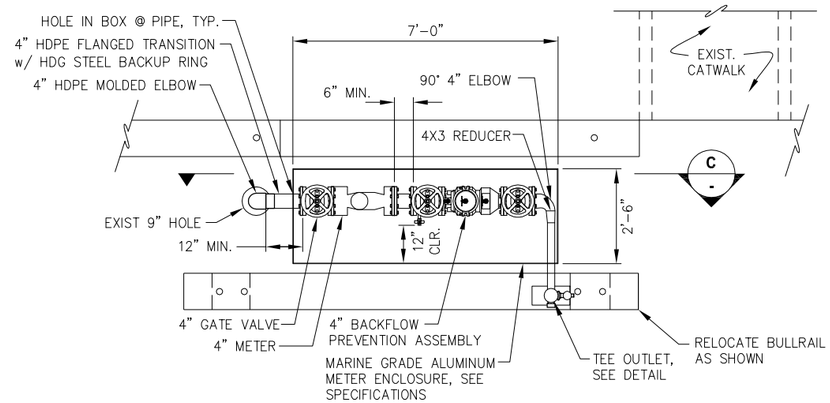

B - **4" OUTLET @ CRUISE DOCK PLAN**

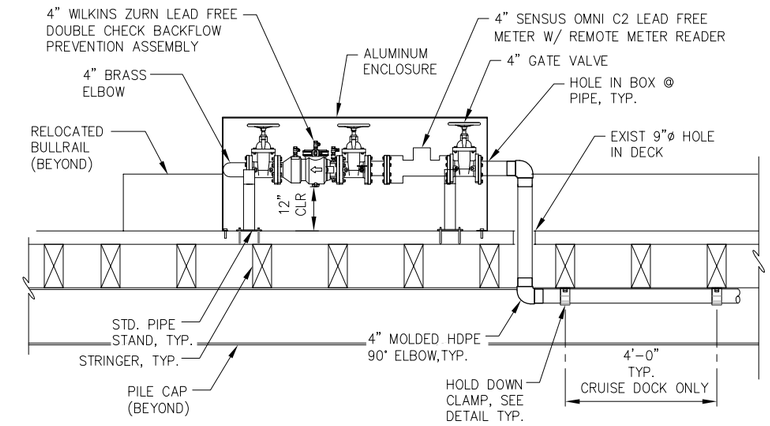

C - **4" OUTLET @ CRUISE DECK ELEVATION**

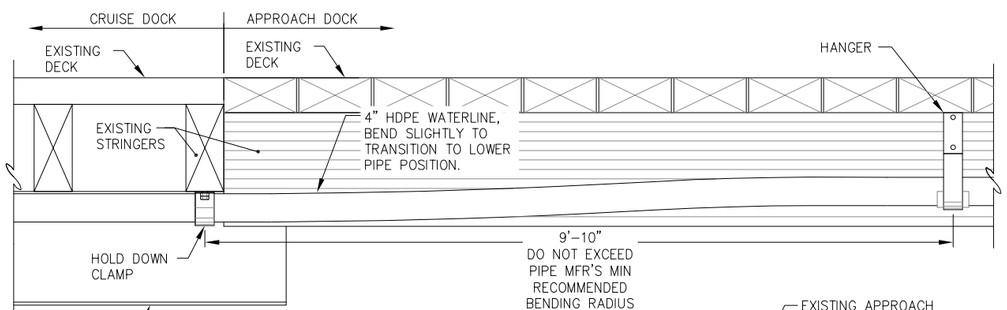

D - **APPROACH DOCK TO CRUISE DOCK TRANSITION**

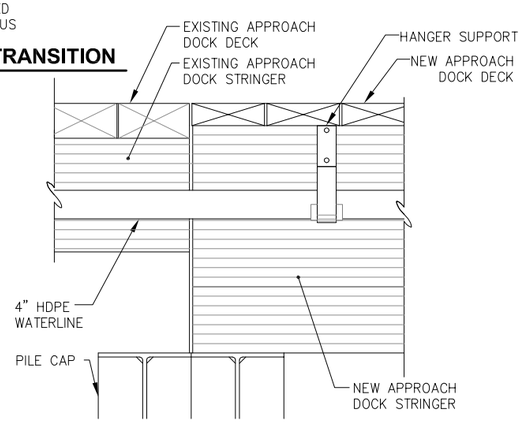

E - **NEW TRESTLE TO EXISTING APPROACH DOCK TRANSITION**

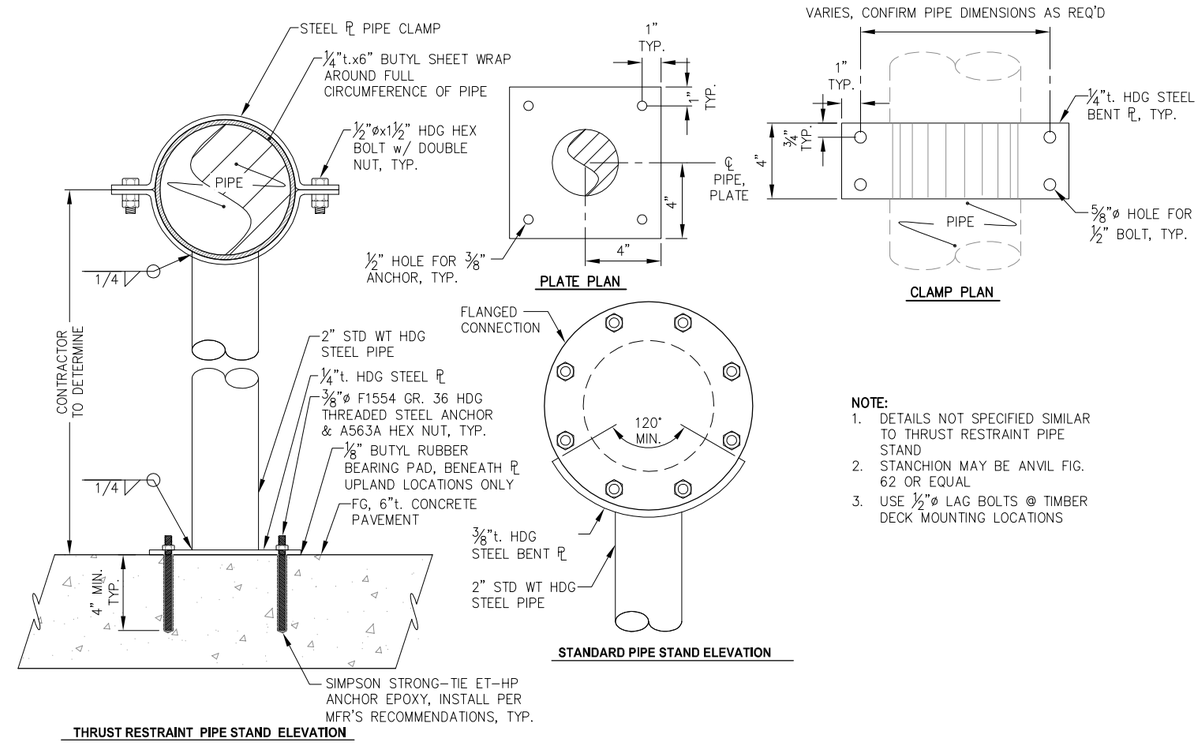

NOTE:
1. DETAILS NOT SPECIFIED SIMILAR TO THRUST RESTRAINT PIPE STAND
2. STANCHION MAY BE ANVIL FIG. 62 OR EQUAL
3. USE ½"ø LAG BOLTS @ TIMBER DECK MOUNTING LOCATIONS

E - **PIPE STANDS TYPICAL DETAIL**

REVISIONS

REV.	DATE	DESCRIPTION	DWN.	CKD.	APP.

P N D ENGINEERS, INC.
9360 Glacier Highway Ste 100
Juneau, Alaska 99801
Phone: 907-586-2093
Fax: 907-586-2099
www.pndengineers.com

DESIGN: LBM CHECKED: TCB
DRAWN: LBM APPROVED: CRS
SCALE: NTS

STATE OF ALASKA — Charles R. Somerville — CE-8845 — REGISTERED PROFESSIONAL ENGINEER
DATE: 3/1/13

HAINES BOROUGH
PORT CHILKOOT DOCK RENOVATION

SHEET TITLE:
WATER SERVICE AT CRUISE DOCK AND WATER SYSTEM DETAILS

PND PROJECT NO.: 112048.08 DWG. FILE: 6.04.DWG

P6.04
SHEET 52 OF 62

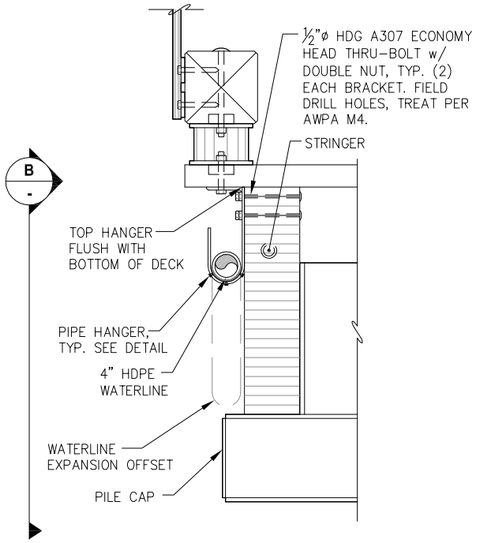

A P6.01 **WATERLINE HANGER TYP. SECTION**

NOTE:
HANGERS SHALL BE LOCATED AS SHOWN AND @ 8'-0" O.C. MAX.

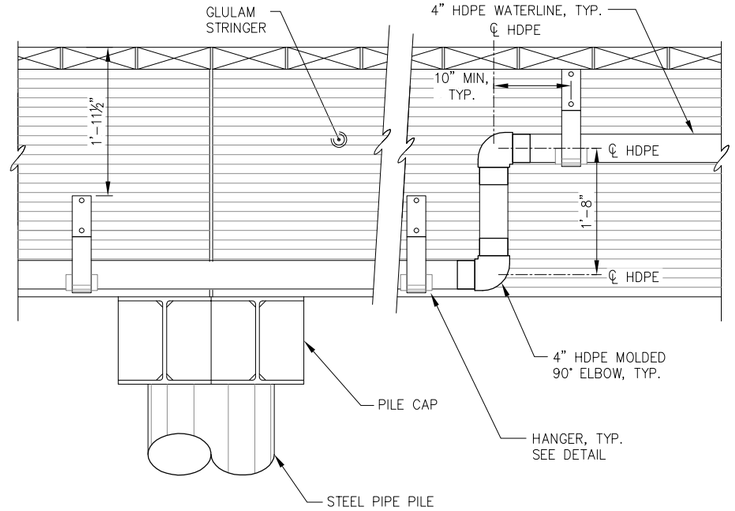

B P6.01 **WATERLINE OFFSET DETAIL**

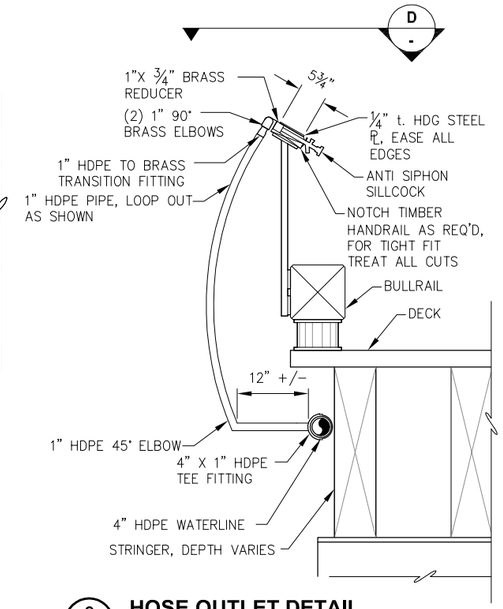

C P6.01 **HOSE OUTLET DETAIL**

NOTE:
1. ¾" HOSE CONNECTION SHALL BE ¼ TURN TYPE WITH VACUUM BREAKER. LEGEND VALVE T550 OR APPROVED EQUAL.
2. CENTER BETWEEN HANGERS.

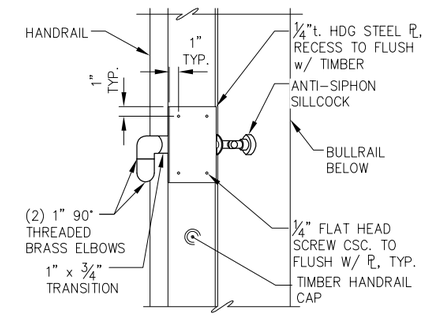

D - **HOSE OUTLET DETAIL**

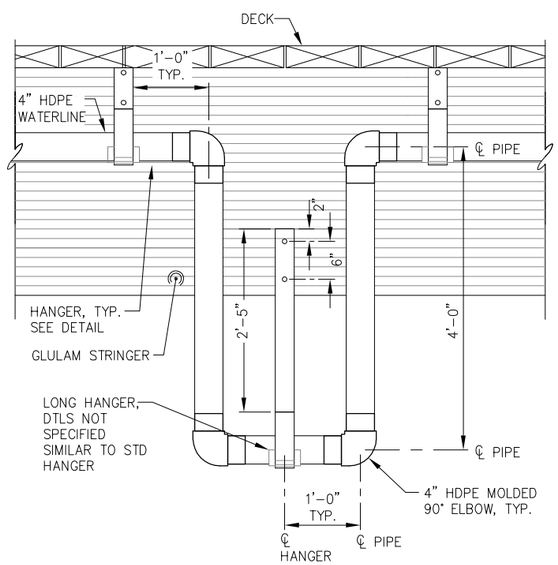

E 6.01 **EXPANSION LOOP DETAIL**

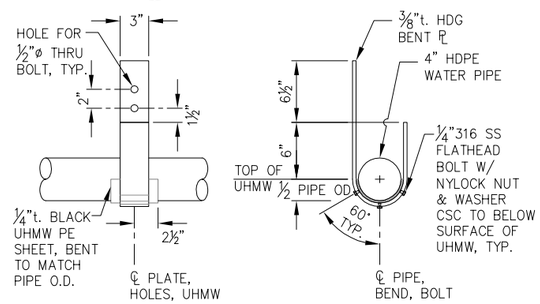

F - **HANGER DETAIL**

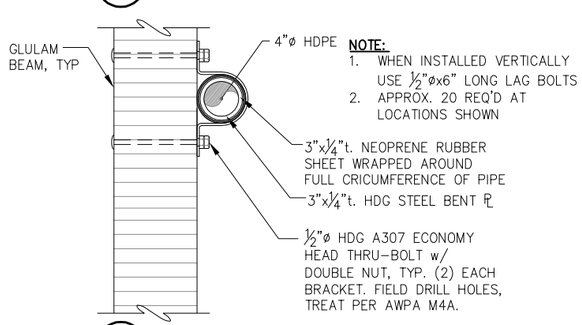

NOTE:
1. WHEN INSTALLED VERTICALLY USE ½"ø x6" LONG LAG BOLTS
2. APPROX. 20 REQ'D AT LOCATIONS SHOWN

G - **HOLD DOWN CLAMP DETAIL**

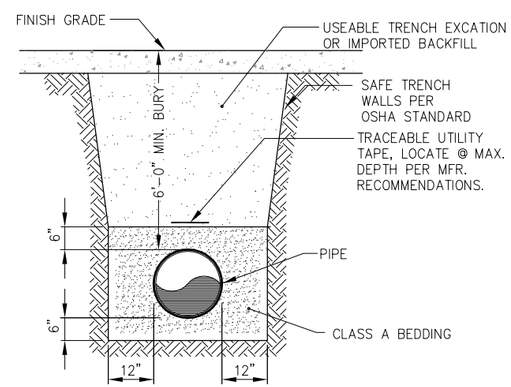

H - **TRENCH DETAIL**

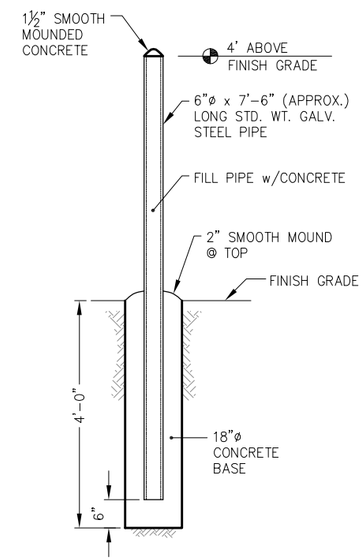

I - **BOLLARD DETAIL**

HAINES BOROUGH ALASKA

REVISIONS

REV.	DATE	DESCRIPTION	DWN.	CKD.	APP.

PND ENGINEERS, INC.
9360 Glacier Highway Ste 100
Juneau, Alaska 99801
Phone: 907-586-2093
Fax: 907-586-2099
www.pndengineers.com

DESIGN: LBM CHECKED: TCB
DRAWN: LBM APPROVED: CRS
SCALE: NTS

STATE OF ALASKA — Charles R. Somerville — CE-8845 — REGISTERED PROFESSIONAL ENGINEER
DATE: 3/1/13

HAINES BOROUGH
PORT CHILKOOT DOCK RENOVATION

SHEET TITLE:
WATER SERVICE DETAILS

PND PROJECT NO.: 112048.08 DWG. FILE: 6.05.DWG

P6.05
SHEET 53 OF 62

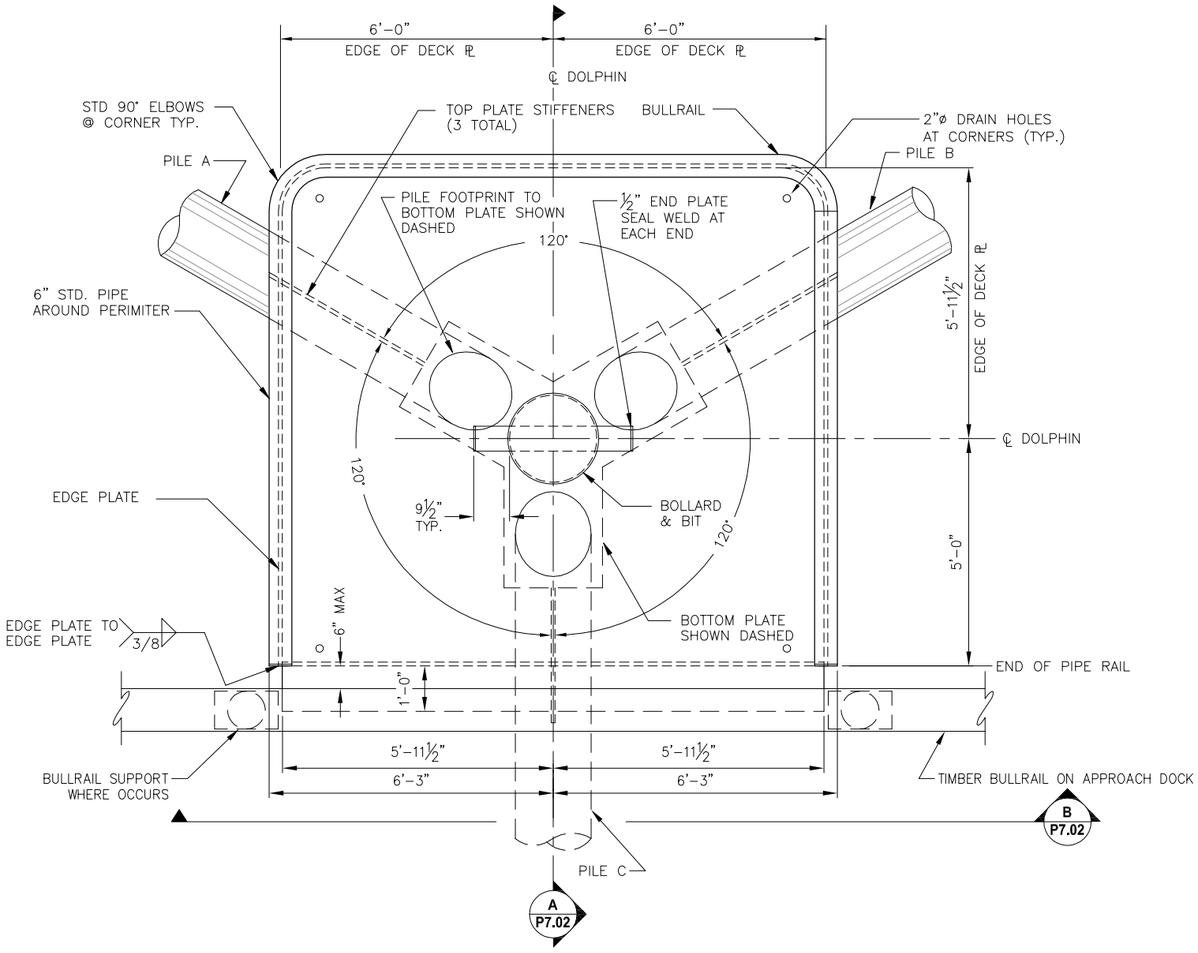

A / 2.06 MOORING DOLPHIN PILE CAP PLAN

(ALL PLATE t = 3/4" U.N.O.)

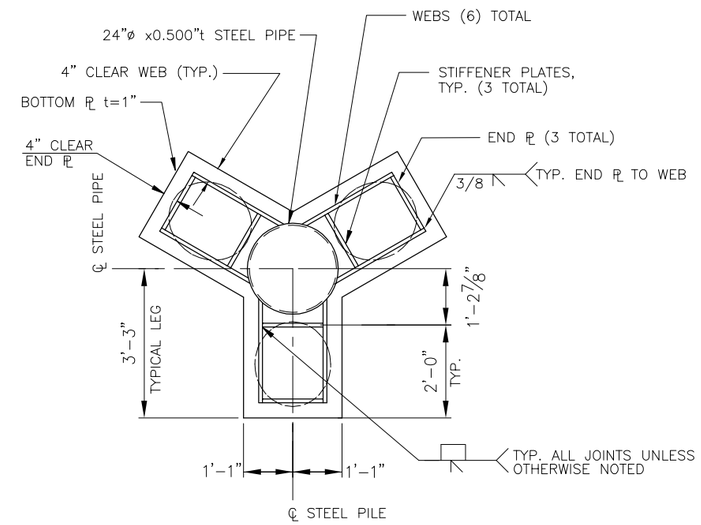

B / - BOTTOM PLATE PLAN

(ALL PLATE t = 3/4" U.N.O.)

MOORING DOLPHIN PILE SCHEDULE

GRID	DESIGNATION	COMPRESSION LOAD (KIPS)	TENSION LOAD (KIPS)	PILE DIAMETER (IN)	PILE WALL THICKNESS (IN)	REQUIRED FURNISHED LENGTH (FT)	PILE TIP
MD-A	BATTER	224	-224	20	0.5	140	CONICAL TIP W/ SPIN FIN
MD-B	BATTER	224	-224	20	0.5	140	CONICAL TIP W/ SPIN FIN
MD-C	BATTER	224	-224	20	0.5	140	CONICAL TIP W/ SPIN FIN

REVISIONS

REV.	DATE	DESCRIPTION	DWN.	CKD.	APP.

P N D ENGINEERS, INC.
9360 Glacier Highway Ste 100
Juneau, Alaska 99801
Phone: 907-586-2093
Fax: 907-586-2099
www.pndengineers.com

DESIGN: SRY CHECKED: CRS
DRAWN: SRY APPROVED: CRS
SCALE: NTS

STATE OF ALASKA — Charles R. Somerville — CE-8845 — REGISTERED PROFESSIONAL ENGINEER
DATE: 3/1/13

HAINES BOROUGH
PORT CHILKOOT DOCK RENOVATION

SHEET TITLE:
ADDITIVE ALTERNATE B
MOORING DOLPHIN

PND PROJECT NO.: 112048.08 DWG. FILE: 3.02.DWG

P7.01
SHEET 54 OF 62

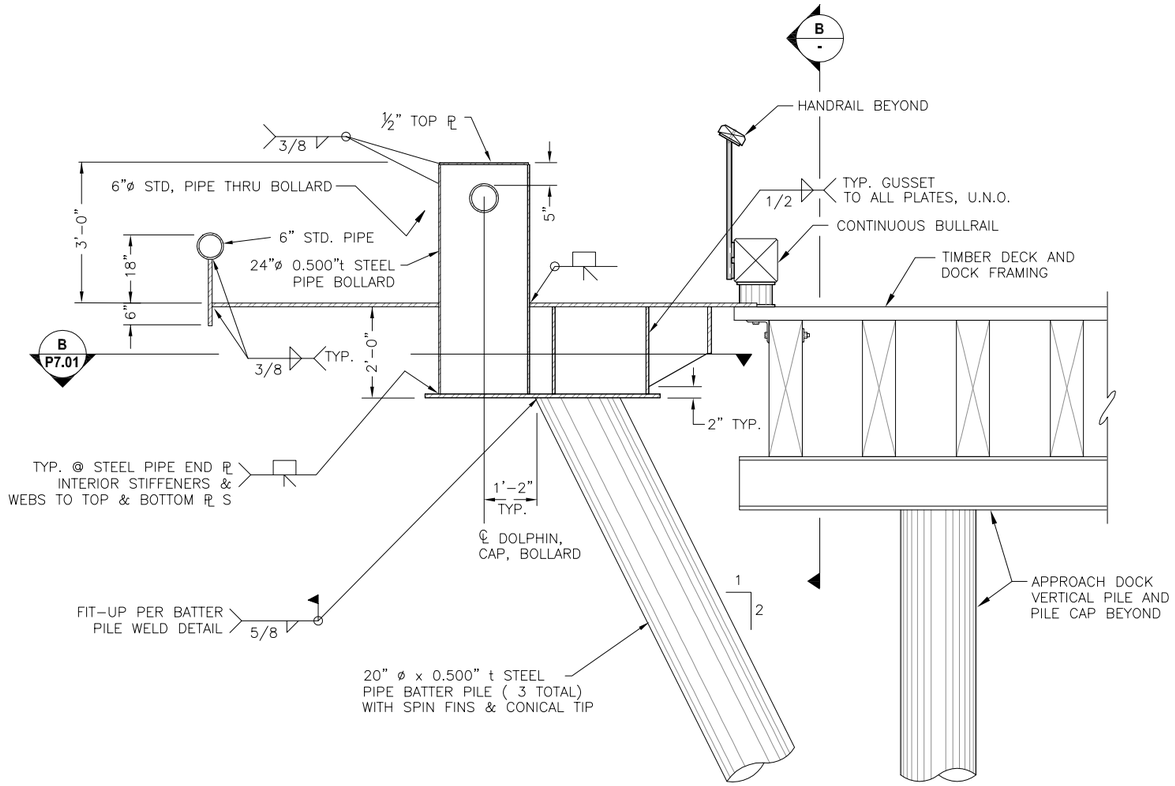

A P7.01 **MOORING DOLPHIN SECTION**
(ALL PLATE t = 3/4" U.N.O.)

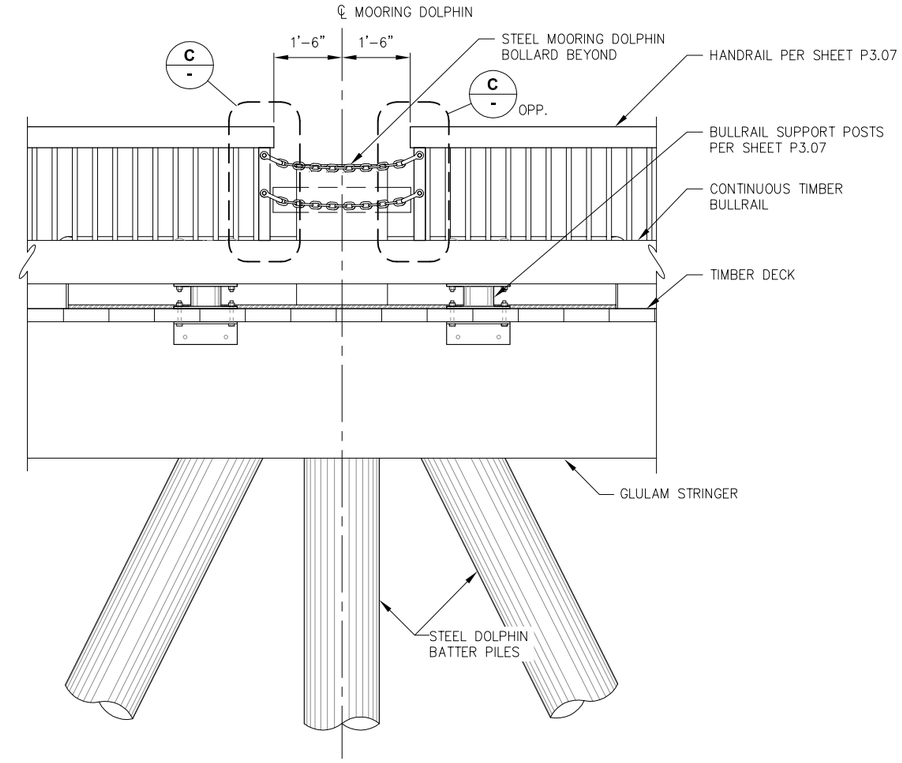

B - **HANDRAIL / BULLRAIL ELEVATION AT MOORING DOLPHIN**

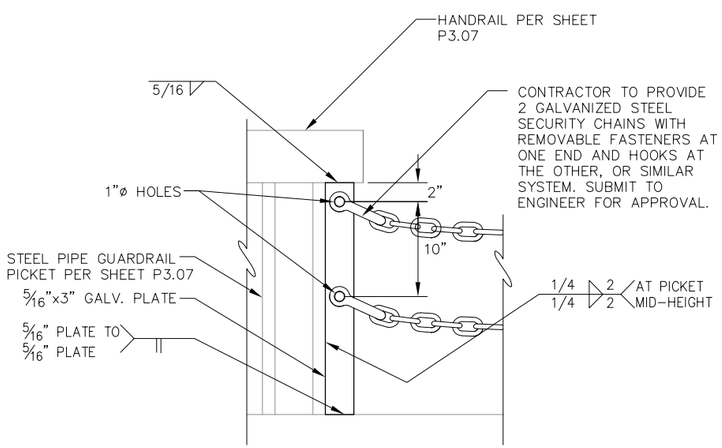

C P7.01 **SECURITY CHAIN TO HANDRAIL DETAIL**

REVISIONS

REV.	DATE	DESCRIPTION	DWN.	CKD.	APP.

PND ENGINEERS, INC.
9360 Glacier Highway Ste 100
Juneau, Alaska 99801
Phone: 907-586-2093
Fax: 907-586-2099
www.pndengineers.com

DESIGN: SRY CHECKED: CRS
DRAWN: SRY APPROVED: CRS
SCALE: NTS
DATE: 3/1/13

STATE OF ALASKA 24917 Charles R. Somerville CE-8845 REGISTERED PROFESSIONAL ENGINEER

HAINES BOROUGH
PORT CHILKOOT DOCK RENOVATION

SHEET TITLE:
ADDITIVE ALTERNATE B
MOORING DOLPHIN

P7.02

PND PROJECT NO.: 112048.08 DWG. FILE: 3.02.DWG

STAGING AREA AND TIMBER DISPOSAL SITE MAP

HAINES BOROUGH ALASKA

REVISIONS

REV.	DATE	DESCRIPTION	DWN.	CKD.	APP.

PND ENGINEERS, INC.
9360 Glacier Highway Ste 100
Juneau, Alaska 99801
Phone: 907-586-2093
Fax: 907-586-2099
www.pndengineers.com

DESIGN: SRY CHECKED: CRS
DRAWN: KLL APPROVED: CRS
SCALE: SCALE IN FEET 0 200' 400'

STATE OF ALASKA 49010 Charles R. Somerville CE-8845 REGISTERED PROFESSIONAL ENGINEER
DATE: 3/1/13

HAINES BOROUGH
PORT CHILKOOT DOCK RENOVATION

SHEET TITLE:
STAGING AREA AND TIMBER DISPOSAL SITE MAP

PND PROJECT NO.: 112048.08 DWG. FILE: 8.01.DWG

P8.01
SHEET 56 OF 62

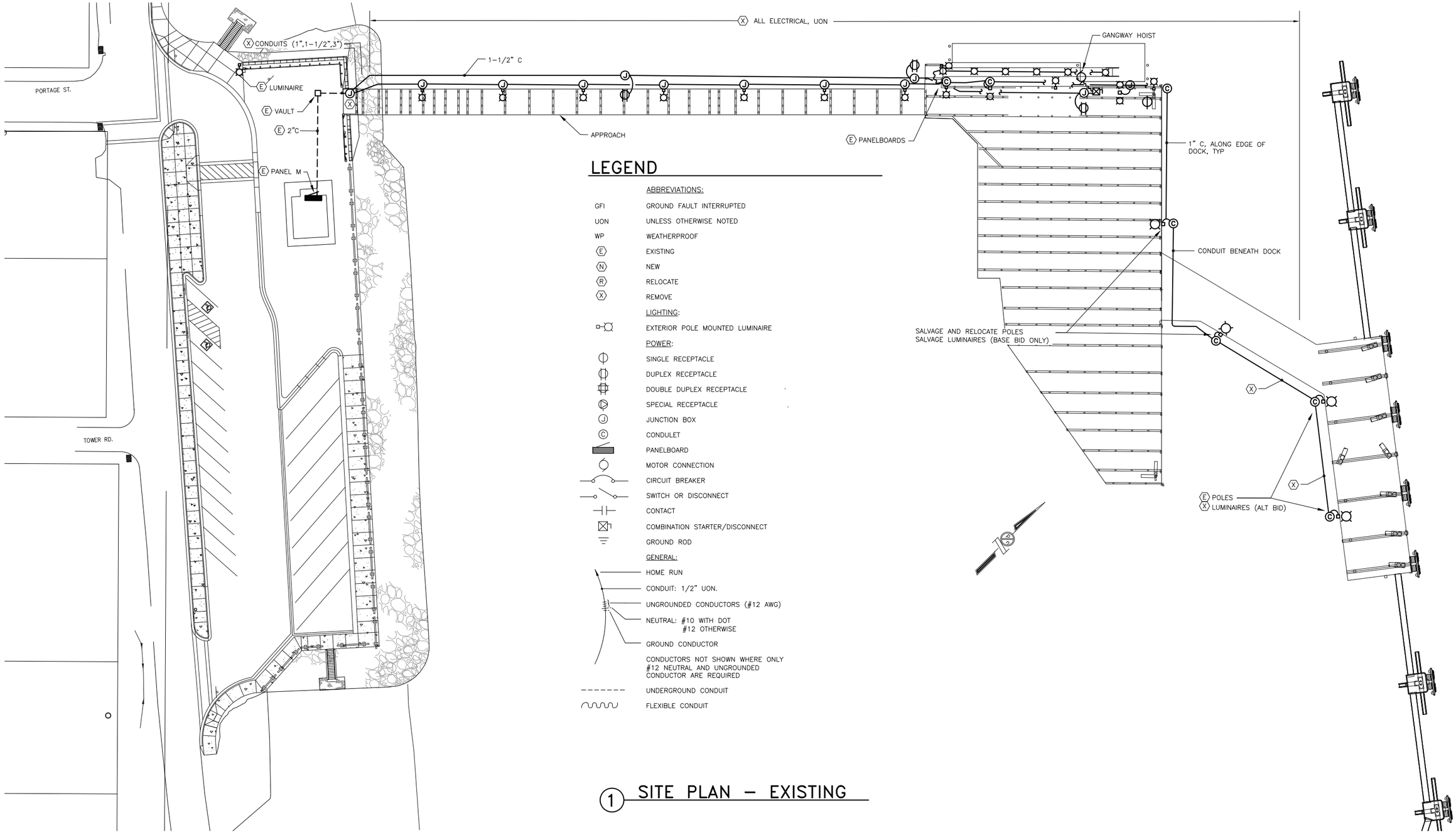

LEGEND

ABBREVIATIONS:

GFI	GROUND FAULT INTERRUPTED
UON	UNLESS OTHERWISE NOTED
WP	WEATHERPROOF
E	EXISTING
N	NEW
R	RELOCATE
X	REMOVE

LIGHTING:

EXTERIOR POLE MOUNTED LUMINAIRE

POWER:

SINGLE RECEPTACLE
DUPLEX RECEPTACLE
DOUBLE DUPLEX RECEPTACLE
SPECIAL RECEPTACLE
JUNCTION BOX
CONDULET
PANELBOARD
MOTOR CONNECTION
CIRCUIT BREAKER
SWITCH OR DISCONNECT
CONTACT
COMBINATION STARTER/DISCONNECT
GROUND ROD

GENERAL:

HOME RUN
CONDUIT: 1/2" UON.
UNGROUNDED CONDUCTORS (#12 AWG)
NEUTRAL: #10 WITH DOT
#12 OTHERWISE
GROUND CONDUCTOR
CONDUCTORS NOT SHOWN WHERE ONLY #12 NEUTRAL AND UNGROUNDED CONDUCTOR ARE REQUIRED
UNDERGROUND CONDUIT
FLEXIBLE CONDUIT

1 SITE PLAN – EXISTING

ELECTRONIC SIGNATURE

HAIGHT & ASSOCIATES
CONSULTING ELECTRICAL ENGINEERS
526 Main Street, Juneau, AK 99801
(907) 586-9788

REVISIONS

REV.	DATE	DESCRIPTION	DWN.	CKD.	APP.

PND ENGINEERS, INC.
9360 Glacier Highway Ste 100
Juneau, Alaska 99801
Phone: 907-586-2093
Fax: 907-586-2099
www.pndengineers.com

DESIGN: BCH CHECKED: BCH
DRAWN: REJ APPROVED: BCH
SCALE: SCALE IN FEET 0 30 60

STATE OF ALASKA B.C. HAIGHT EE 4800 REGISTERED PROFESSIONAL ENGINEER
DATE: Mar 04, 2013

HAINES BOROUGH
PORT CHILKOOT DOCK RENOVATION

SHEET TITLE: SITE PLAN - EXISTING

PND PROJECT NO.: 112048.08 DWG. FILE:

E1
SHEET 57 OF 62

Mar 04, 2013 - 2:45pm
F:\Projects\37 PN&D\89 PC Dock Replacement\Drawings\WORKING\E1.dwg (Layout1 tab)

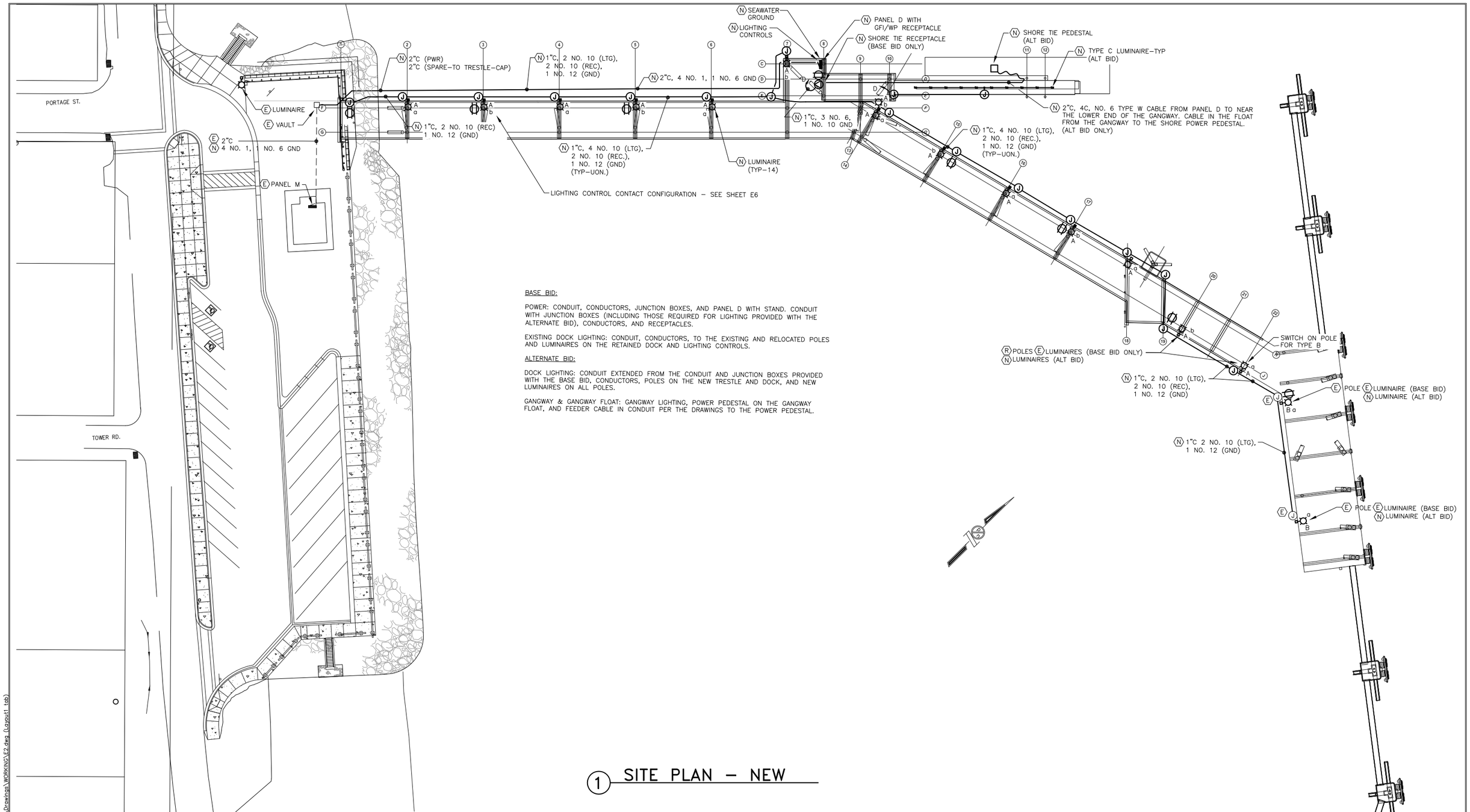

BASE BID:

POWER: CONDUIT, CONDUCTORS, JUNCTION BOXES, AND PANEL D WITH STAND. CONDUIT WITH JUNCTION BOXES (INCLUDING THOSE REQUIRED FOR LIGHTING PROVIDED WITH THE ALTERNATE BID), CONDUCTORS, AND RECEPTACLES.

EXISTING DOCK LIGHTING: CONDUIT, CONDUCTORS, TO THE EXISTING AND RELOCATED POLES AND LUMINAIRES ON THE RETAINED DOCK AND LIGHTING CONTROLS.

ALTERNATE BID:

DOCK LIGHTING: CONDUIT EXTENDED FROM THE CONDUIT AND JUNCTION BOXES PROVIDED WITH THE BASE BID, CONDUCTORS, POLES ON THE NEW TRESTLE AND DOCK, AND NEW LUMINAIRES ON ALL POLES.

GANGWAY & GANGWAY FLOAT: GANGWAY LIGHTING, POWER PEDESTAL ON THE GANGWAY FLOAT, AND FEEDER CABLE IN CONDUIT PER THE DRAWINGS TO THE POWER PEDESTAL.

1 SITE PLAN – NEW

ELECTRONIC SIGNATURE

HAIGHT & ASSOCIATES
CONSULTING ELECTRICAL ENGINEERS
526 Main Street, Juneau, AK 99801
(907) 586-9788

REVISIONS

REV.	DATE	DESCRIPTION	DWN.	CKD.	APP.

PND ENGINEERS, INC.
9360 Glacier Highway Ste 100
Juneau, Alaska 99801
Phone: 907-586-2093
Fax: 907-586-2099
www.pndengineers.com

DESIGN: BCH CHECKED: BCH
DRAWN: REJ APPROVED: BCH
SCALE: SCALE IN FEET 0 30 60

STATE OF ALASKA B.C. HAIGHT EE 4800 REGISTERED PROFESSIONAL ENGINEER
DATE: Mar 04, 2013

HAINES BOROUGH
PORT CHILKOOT DOCK RENOVATION

SHEET TITLE: SITE PLAN - NEW

PND PROJECT NO.: 112048.08 DWG. FILE:

E2
SHEET 58 OF 62

Mar 04, 2013 – 3:07pm
F:\Projects\37 PNED\89 PC Dock Replacement\Drawings\WORKING\E2.dwg (Layout1 tab)

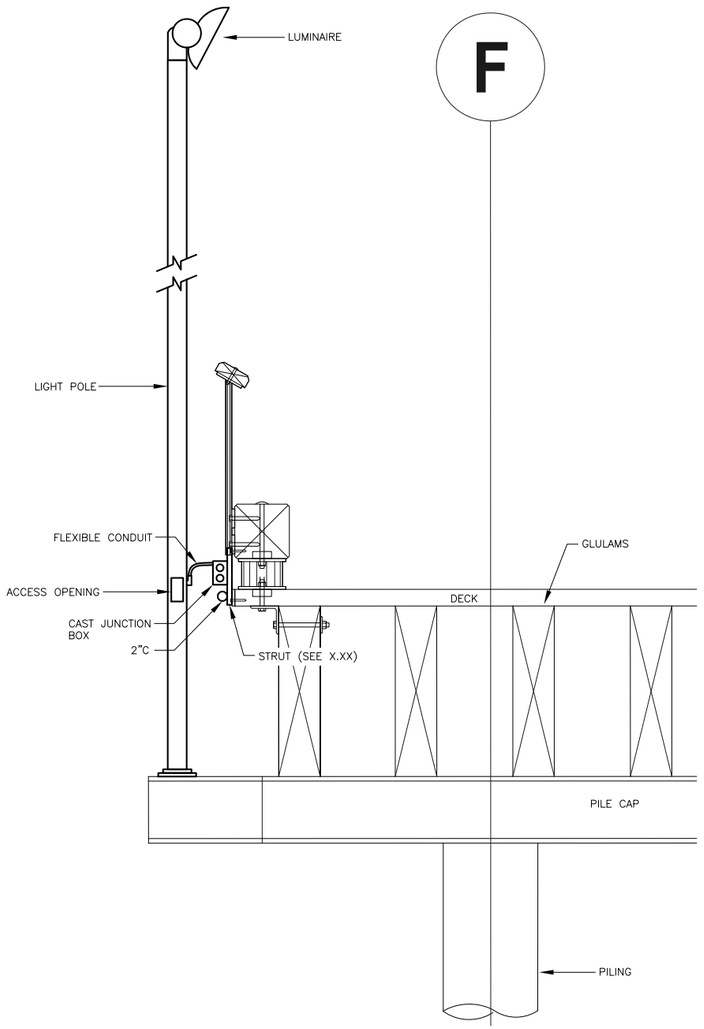

1 DETAIL – LUMINAIRE POLE

SCALE IN FEET 0 1' 2' 4'

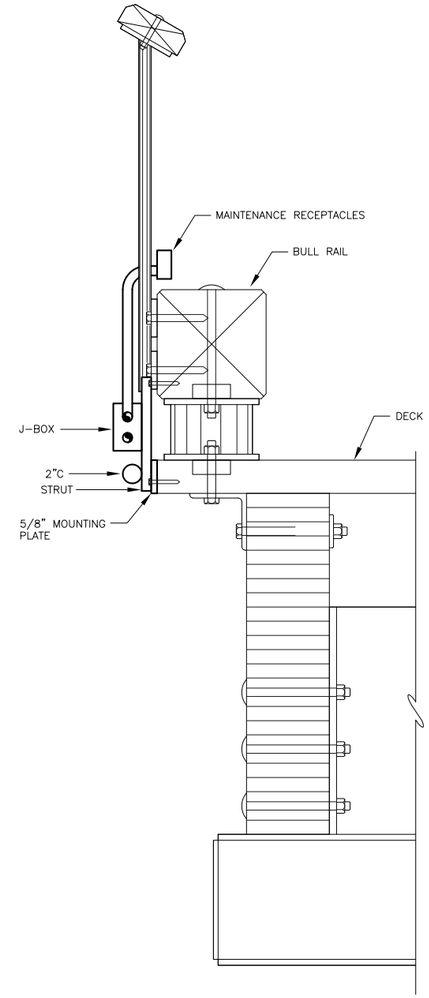

2 DETAIL –

SCALE IN FEET 0 6" 1' 2'

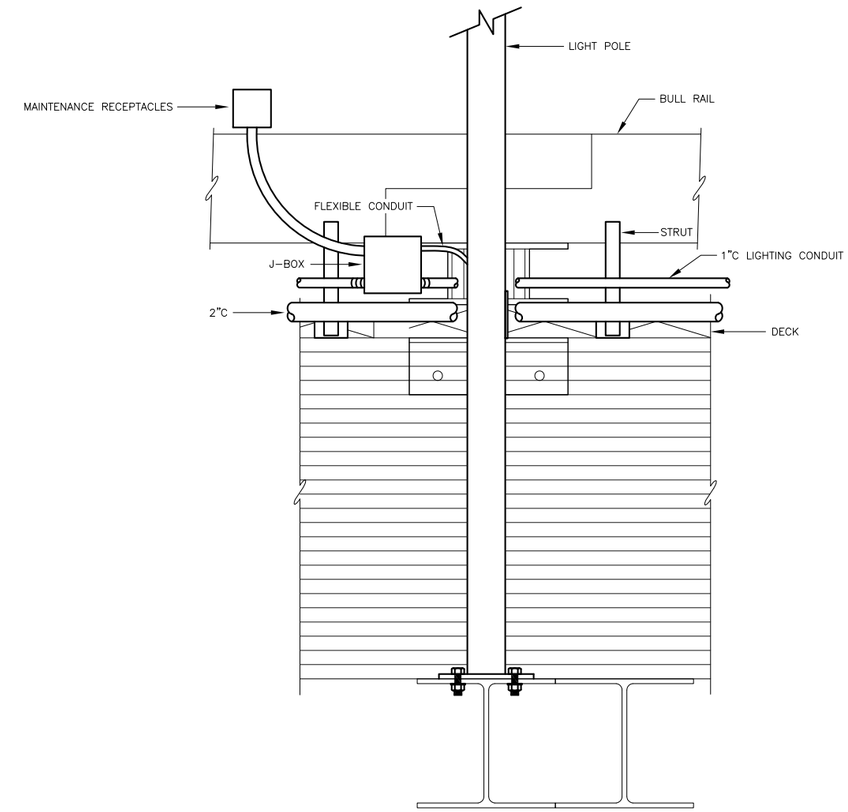

3 DETAIL –

SCALE IN FEET 0 6" 1' 2'

LUMINAIRE SCHEDULE

TYPE	DESCRIPTION	MANUFACTURER	LAMPS	REMARKS
A	ARM MOUNT LED FLOODLIGHT, DIE CAST ALUMINUM HOUSING, TYPE II DISTRIBUTION, INTEGRAL ELECTRONIC DRIVER, NATURAL ALUMINUM FINISH LIGHT POLE, 18' TALL, 4"X4" SQUARE, STEEL CAST, HOT DIPPED GALVANIZED FINISH	GARDCO PUREFORM P21-A1-1-2-55LA-NW-UNIV -NP-BD KW INDUSTRIES SSP-18-4-8-G-2-DM10	55W LED 4000K, CRI 70 --	MOUNT TO DOCK PER DETAILS SHEETS
B	YOKE MOUNT LED FLOODLIGHT, DIE CAST ALUMINUM HOUSING, STAINLESS STEEL YOKE, 6X6 WIDE FLOOD DISTRIBUTION, HALF GLARE SHIELD, INTEGRAL ELECTRONIC DRIVER, NATURAL ALUMINUM FINISH	HYDREL 8200-72LED-700mA-WHT41K -MVOLT-WFL-YM-SS/STG-HGS-LPI-DNA	166W LED 4100K, CRI 70	MOUNT TO EXISTING 12' POLES. PROVIDE NEW YOKE MOUNT.
C	1.5" DIA SURFACE MOUNT LINEAR LED ENCLOSED STRIP, EXTRUDED ALUMINUM HOUSING 45° PRECISION ACRYLIC OPTICS, MEDIUM OUTPUT 100W DRIVER WITH ENCL	IO LIGHTING O.10.E.4KMO.45.100.1.18.2.120	LED 4000K WHITE	PROVIDE (1) 100W, 24V LED DRIVER TO SUPPORT ALL FIXTURES. I-O LIGHTING PART NO. 100ND-2.0-11X4X4

NOTE: ALL LUMINAIRE MOUNTING HEIGHTS ARE TO THE BOTTOM OF THE LUMINAIRE, UNLESS OTHERWISE NOTED AND OR APPLICABLE.

ELECTRONIC SIGNATURE

HAIGHT & ASSOCIATES
CONSULTING ELECTRICAL ENGINEERS
526 Main Street, Juneau, AK 99801
(907) 586-9788

REVISIONS

REV.	DATE	DESCRIPTION	DWN.	CKD.	APP.

PND ENGINEERS, INC.
9360 Glacier Highway Ste 100
Juneau, Alaska 99801
Phone: 907-586-2093
Fax: 907-586-2099
www.pndengineers.com

DESIGN: BCH CHECKED: BCH
DRAWN: REJ APPROVED: BCH
SCALE:

STATE OF ALASKA B.C. HAIGHT EE 4800 REGISTERED PROFESSIONAL ENGINEER
DATE: Mar 04, 2013

HAINES BOROUGH
PORT CHILKOOT DOCK RENOVATION

SHEET TITLE: DETAILS - TRESTLE

PND PROJECT NO.: 112048.08 DWG. FILE:

E3
SHEET 59 OF 62

Mar 04, 2013 - 2:46pm
F:\Projects\37 PWBD\89 PC Dock Replacement\Drawings\WORKING\E3.dwg (Layout1 tab)

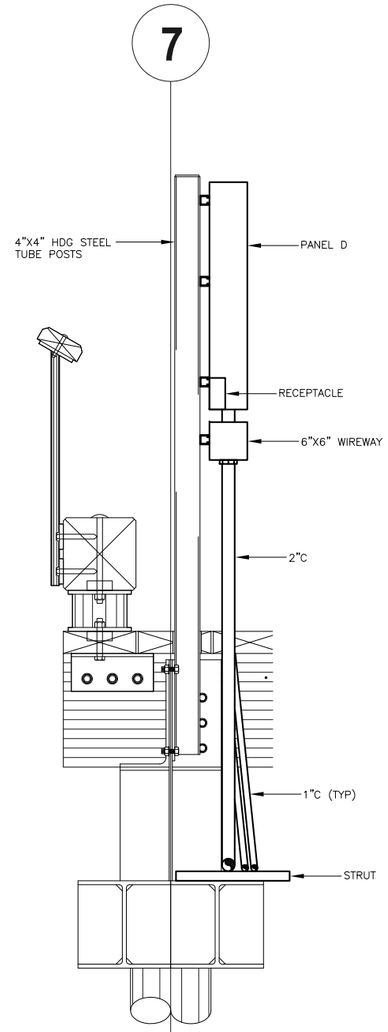

SIDE

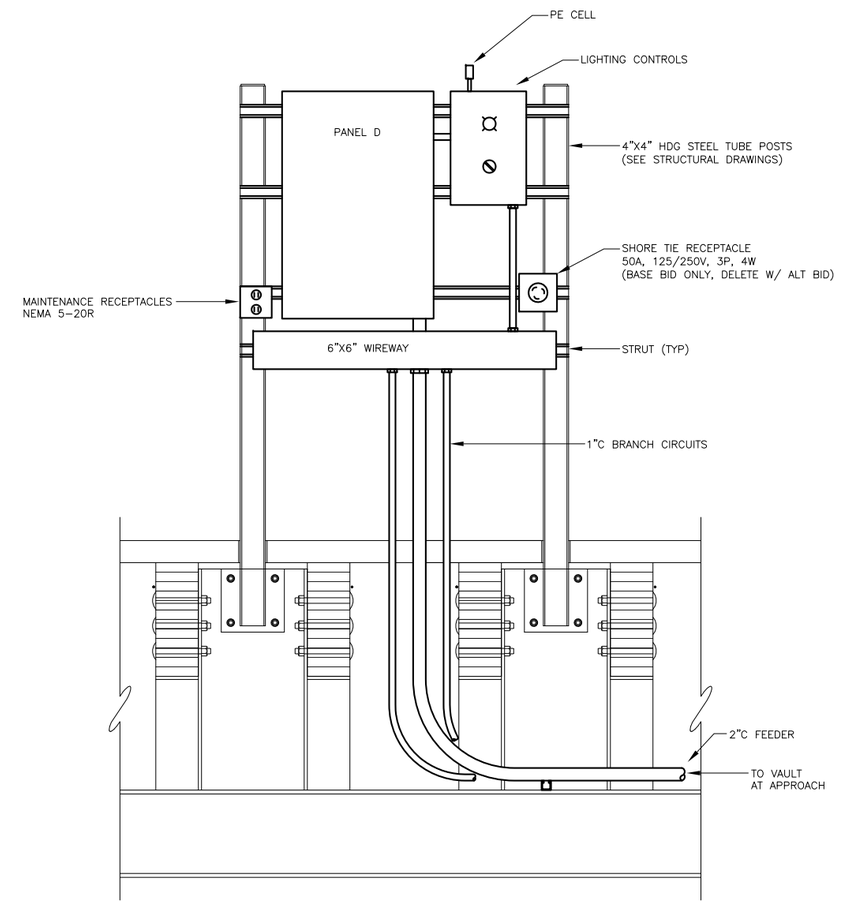

FRONT

1 ELEVATIONS – EQUIPMENT STAND

SCALE IN FEET
0 6" 1' 2' 4'

ELECTRONIC SIGNATURE

HAIGHT & ASSOCIATES
CONSULTING ELECTRICAL ENGINEERS
526 Main Street, Juneau, AK 99801
(907) 586-9788

REVISIONS

REV.	DATE	DESCRIPTION	DWN.	CKD.	APP.

PND ENGINEERS, INC.
9360 Glacier Highway Ste 100
Juneau, Alaska 99801
Phone: 907-586-2093
Fax: 907-586-2099
www.pndengineers.com

DESIGN: BCH CHECKED: BCH
DRAWN: REJ APPROVED: BCH
SCALE:

STATE OF ALASKA B.C. HAIGHT EE 4800 REGISTERED PROFESSIONAL ENGINEER
DATE: Mar 04, 2013

HAINES BOROUGH
PORT CHILKOOT DOCK RENOVATION

SHEET TITLE: ELEVATIONS - EQUIPMENT PANEL

PND PROJECT NO.: 112048.08 DWG. FILE:

E4
SHEET 60 OF 62

Mar 04, 2013 – 3:08pm
F:\Projects\37 PNAO\39 PC Dock Replacement\Drawings\WORKING\E4.dwg (Layout1 tab)

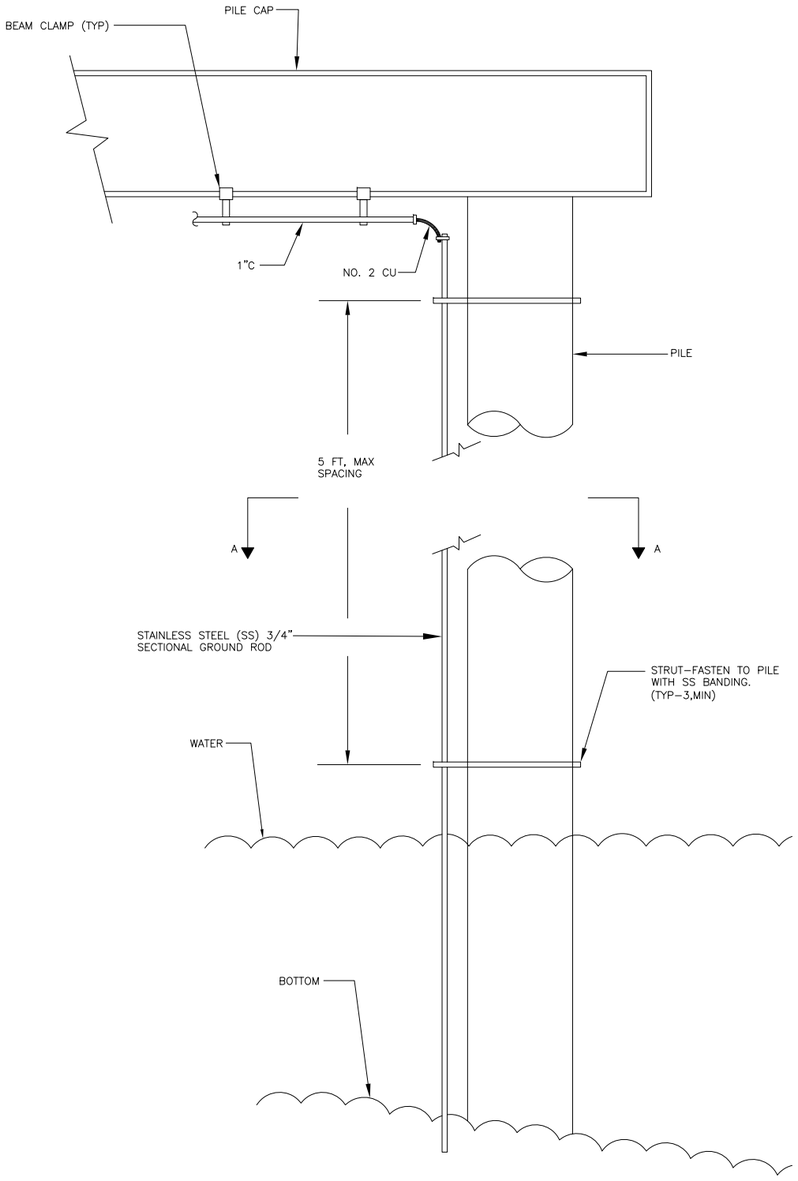

1 DETAIL – SEAWATER GROUND ELECTRODES

NO SCALE

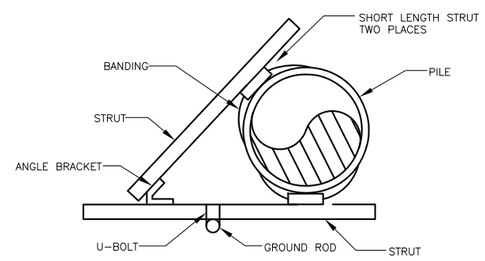

2 DETAIL – SECTION A–A

NO SCALE

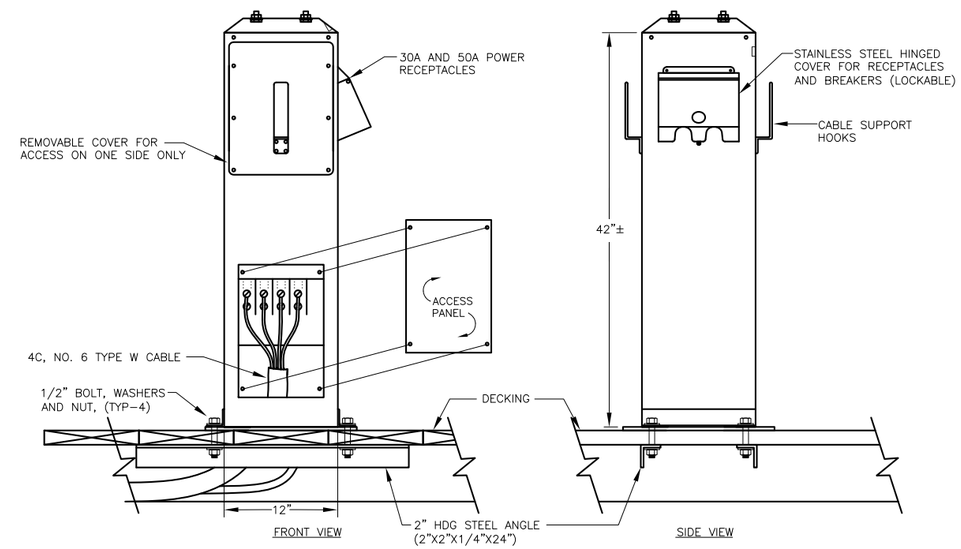

3 ELEVATION – SHORE TIE PEDESTAL (TYP)

NO SCALE

ELECTRONIC
SIGNATURE

HAIGHT
& ASSOCIATES
CONSULTING
ELECTRICAL
ENGINEERS
526 Main Street, Juneau, AK 99801
(907) 586-9788

REVISIONS

REV.	DATE	DESCRIPTION	DWN.	CKD.	APP.

P N D
ENGINEERS, INC.
9360 Glacier Highway Ste 100
Juneau, Alaska 99801
Phone: 907-586-2093
Fax: 907-586-2099
www.pndengineers.com

DESIGN: BCH CHECKED: BCH
DRAWN: REJ APPROVED: BCH
SCALE:

STATE OF ALASKA
B.C. HAIGHT
EE 4800
REGISTERED PROFESSIONAL ENGINEER
DATE: Mar 04, 2013

HAINES BOROUGH
PORT CHILKOOT DOCK RENOVATION

SHEET TITLE:
DETAILS

PND PROJECT NO.: 112048.08 DWG. FILE:

E5
SHEET 61 OF 62

Mar 04, 2013 - 2:48pm
F:\Projects\137 PN&O\89 PC Dock Replacement\Drawings\WORKING\E5.dwg (Layout1.tab)

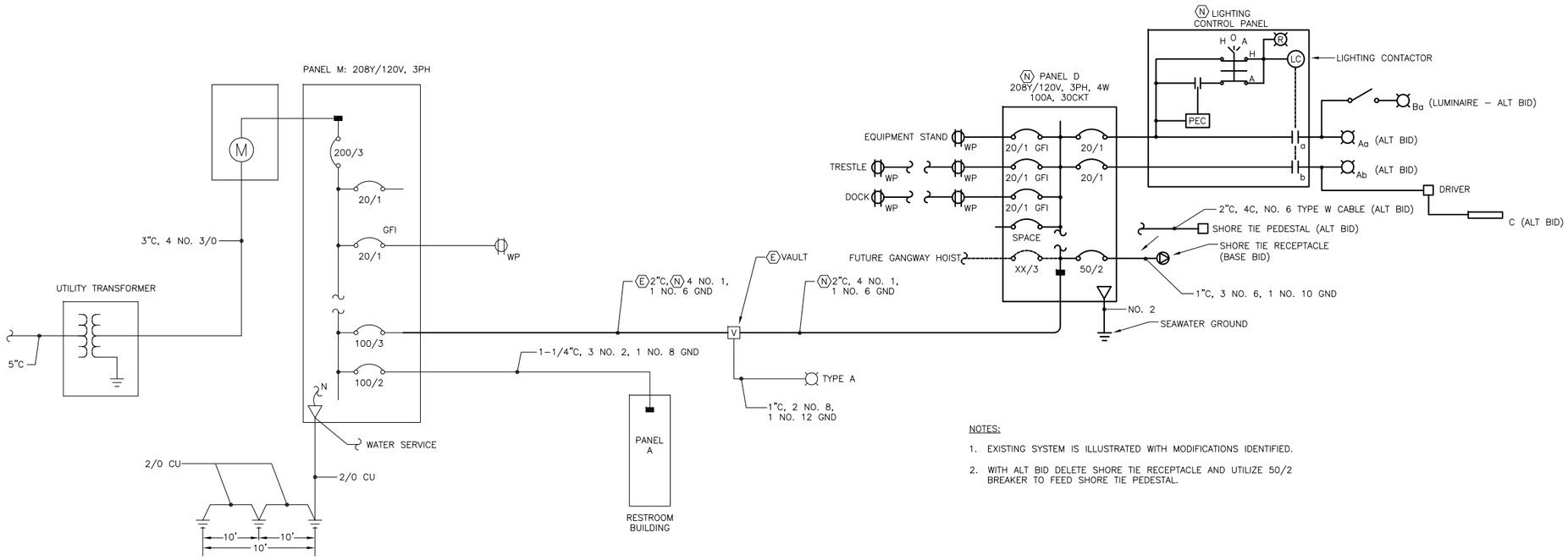

NOTES:

1. EXISTING SYSTEM IS ILLUSTRATED WITH MODIFICATIONS IDENTIFIED.
2. WITH ALT BID DELETE SHORE TIE RECEPTACLE AND UTILIZE 50/2 BREAKER TO FEED SHORE TIE PEDESTAL.

1 SINGLE LINE DIAGRAM–POWER DISTRIBUTION SYSTEM

NO SCALE

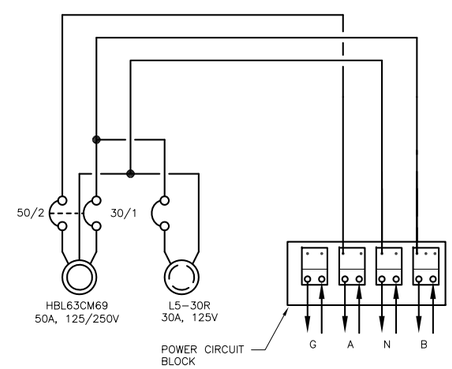

2 WIRING DIAGRAM–SHORE TIE PEDESTAL

NO SCALE

ELECTRONIC SIGNATURE

HAIGHT & ASSOCIATES
CONSULTING ELECTRICAL ENGINEERS
526 Main Street, Juneau, AK 99801
(907) 586-9788

REVISIONS

REV.	DATE	DESCRIPTION	DWN.	CKD.	APP.

PND ENGINEERS, INC.
9360 Glacier Highway Ste 100
Juneau, Alaska 99801
Phone: 907-586-2093
Fax: 907-586-2099
www.pndengineers.com

DESIGN: BCH CHECKED: BCH
DRAWN: REJ APPROVED: BCH
SCALE:

STATE OF ALASKA B.C. HAIGHT EE 4800 REGISTERED PROFESSIONAL ENGINEER
DATE: Mar 04, 2013

HAINES BOROUGH
PORT CHILKOOT DOCK RENOVATION

SHEET TITLE: SINGLE LINE DIAGRAM

PND PROJECT NO.: 112048.08 DWG. FILE:

E6
SHEET 62 OF 62

Mar 04, 2013 – 3:08pm
F:\Projects\37 PNMG\39 PC Dock Replacement\Drawings\WORKING\E6.dwg (Layout1 tab)